Покупайте оригинальные и аналоговые запчасти для сельхозтехники Джон Дир в компании Аврора Агро Партс на www.aa-p.ru

460M and 560M Round Balers

JOHN DEERE

OPERATOR'S MANUAL

460M and 560M Round Balers

OMFH331602 ISSUE A9 (ENGLISH)

John Deere Ottumwa Works

Export Edition

PRINTED IN U.S.A.

Introduction

Foreword

E83963—UN—31JUL17

560M Round Baler

READ THIS MANUAL carefully to learn how to operate and service your machine correctly. Failure to do so could result in personal injury or equipment damage. This manual and safety signs on your machine are available in other languages (see your John Deere dealer to order).

THIS MANUAL SHOULD BE CONSIDERED a permanent part of your machine and must remain with the machine when you sell it.

Measurements in this manual are given in both metric and customary U.S. unit equivalents. Use only correct replacement parts and fasteners. Metric and inch fasteners require a specific metric or inch wrench.

RIGHT-HAND AND LEFT-HAND sides are determined by facing the direction the implement travels when going forward.

WRITE PRODUCT IDENTIFICATION NUMBERS (PIN) in the Specification or Identification Numbers section. Accurately record all the numbers to help in tracing the machine should it be stolen. Your dealer also needs these numbers when you order parts. File the identification numbers in a secure place off the machine.

BEFORE DELIVERING THIS MACHINE, ensure that your dealer performed a predelivery inspection.

THIS BALER IS DESIGNED SOLELY for use in customary agricultural or similar operations ("INTENDED USE"). Use in any other way is considered as contrary to the intended use. The manufacturer accepts no liability for damage or injury resulting from this misuse, and these risks must be borne solely by the user. Compliance with and strict adherence to the conditions of operation, service, and repair as specified by the manufacturer also constitute essential elements for the intended use.

THIS BALER SHOULD BE OPERATED, serviced and repaired only by persons familiar with all its particular characteristics and acquainted with the relevant safety rules (accident prevention). The accident prevention regulations, all other recognized regulations on safety and occupational medicine and the road traffic regulations must be observed at all times. Any arbitrary modifications carried out on this baler relieves the manufacturer of all liability for any resulting damage or injury.

If you are not the original owner of this machine, it is in your interest to contact your local John Deere dealer to inform them of this unit's serial number. This helps John Deere notify you of any issues or product improvements.

OUO6064,0001FE8-19-05JAN18

Contents

Continued on next page

Original Instructions. All information, illustrations and specifications in this manual are based on the latest information available at the time of publication. The right is reserved to make changes at any time without notice.

COPYRIGHT © 2019
DEERE & COMPANY
Moline, Illinois
All rights reserved.

Machine Safety Features

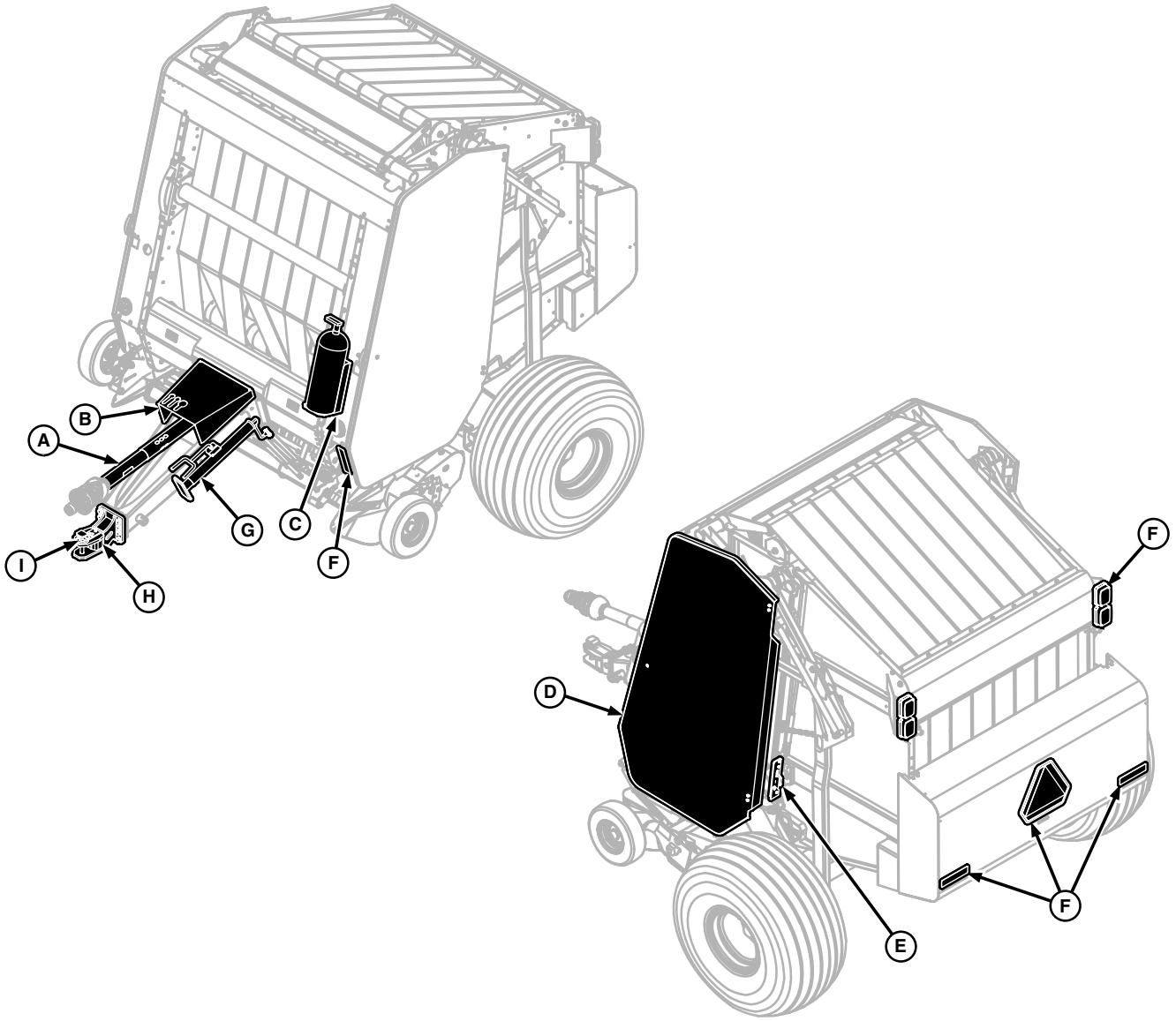

E69509—UN—26MAR13

A — Fully shielded power take-off (PTO).

B — Hinged shielding over slip clutch covers rotating input shaft. Provides easy service access.

C — Fire extinguisher mounting location to accommodate installation of extinguisher where use conditions dictate.

D — Doors or shields on both sides of baler cover drive components. Mechanical latch makes opening and closing convenient for service access.

E — Rear gate lockout secures gate in open position for access to inside of bale chamber.

F — Slow moving vehicle (SMV) emblem, flashing warning lights, red tail lights, and reflectors enhance visibility during road transport. Flashing warning lights synchronize with tractor turn signals to indicate turn intention to vehicular traffic.

G — Jackstand supports and positions hitch for hookup and removal.

H — Safety chain further secures machine to tractor drawbar.

I — Drawbar hitch pin retainer keeps implement hitch pin in place.

PP98408,0000482-19-10JUL13

Recognize Safety Information

T81389—UN—28JUN13

This is a safety-alert symbol. When you see this symbol on your machine or in this manual, be alert to the potential for personal injury.

Follow recommended precautions and safe operating practices.

DX,ALERT-19-29SEP98

Follow Safety Instructions

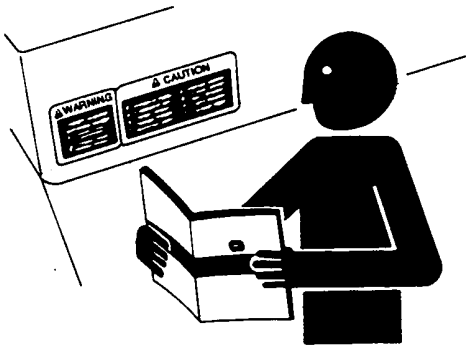

TS201—UN—15APR13

Carefully read all safety messages in this manual and on your machine safety signs. Keep safety signs in good condition. Replace missing or damaged safety signs. Be sure new equipment components and repair parts include the current safety signs. Replacement safety signs are available from your John Deere dealer.

Learn how to operate the machine and how to use controls properly. Do not let anyone operate without instruction.

Keep your machine in proper working condition. Unauthorized modifications to the machine may impair the function and/or safety and affect machine life.

If you do not understand any part of this manual and need assistance, contact your John Deere dealer.

PP98408,0000A0F-19-30NOV11

Protect Bystanders

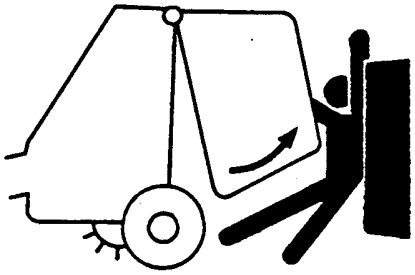

E32162—UN—12SEP88

To prevent crushing injury be sure bystanders stand clear before operating gate, and/or push bar (if equipped) and unloading bale.

PP98408,0000A11-19-30NOV11

Operate Baler Safely

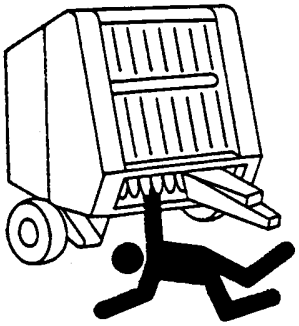

E32161—UN—12SEP88

To avoid injury or death by being pulled into the machine:

- DO NOT attempt to feed crop or twine into baler or unplug feed area WHILE BALER IS RUNNING. The baler feeds material faster than you can release it.
- Disengage PTO and shut off engine.
- Stand clear of baler at all times when machine is operating.

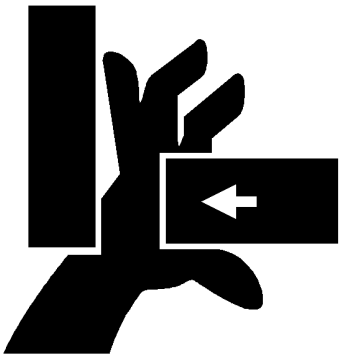

E47598—UN—07JAN00

If baler plugs during twine arm cycle, it is recommended that twine arms be manually positioned to release any “hold” they may have on the crop plug. Turn off power to twine arms. This will help to make the unplugging operation easier and prevent twine arms from moving unexpectedly while your hands may be in the path of the twine arms. Stay out of the path of twine arms at all times when power to the arms is ON.

PP98408,0000A12-19-30NOV11

Operate Safely on Slopes

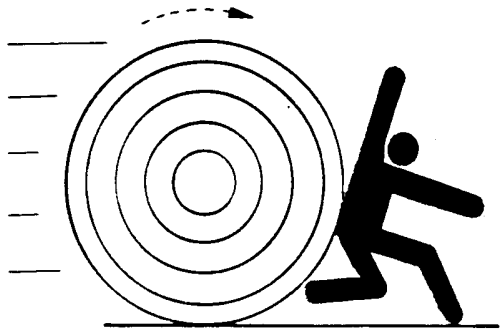

E36866—UN—30APR92

Be especially careful when operating on hillsides. The baler may tip sideways if it strikes a hole, ditch, or other irregularity.

To prevent injury or damage from a rolling bale, discharge bales on level ground or in such a manner that the bale will not roll.

PP98408,0000A13-19-30NOV11

Handle Round Bales Safely

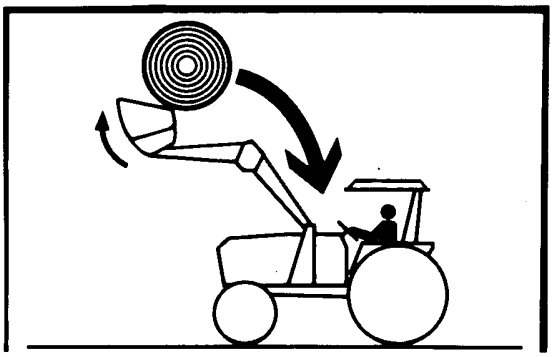

W00226—UN—04DEC91

To help prevent personal injury, do not handle round bales without approved John Deere Round Bale Handling attachments.

Improper use of loaders to handle round bales can result in serious injury or death to the tractor/loader operator. This could be caused by the bale rolling back down the loader into the operator's station.

To attain optimum stability and visibility:

- Do not handle bales that exceed the bale weight limitations of the loader.
- Carry the bale slowly and as low as possible to the ground.
- Operate the loader controls smoothly, avoiding jerky operation.
- When handling round bales on a slope, always approach the bale with the tractor facing uphill.
- Never use the tractor/loader to stop a rolling bale.

PP98408,0000A14-19-30NOV11

Prepare for Emergencies

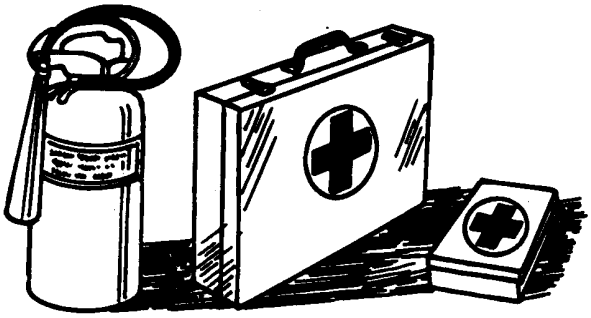

TS291—UN—15APR13

Be prepared if a fire starts.

Keep first aid kit handy.

Keep emergency numbers for doctors, ambulance service, hospital, and fire department near your telephone.

PP98408,0000A15-19-21FEB12

Fire Prevention

TS227—UN—15APR13

To reduce the risk of fire, follow these guidelines, especially in any dry crop conditions:

- Equip the baler with a water-type fire extinguisher. Large capacity water fire extinguishers are

recommended because application of water can cool hot parts to prevent a fire. (See Attachments section.)

- Keep foreign material (crop, chaff, twine, net wrap material) from building up on the machine near potentially hot areas. An example is bearings on the ends of baler rolls. Remove this buildup as part of the regular service operations.
- Prevent damaging seals by avoiding high-pressure power-washing adjacent to the bearings on ends of baler rolls.
- Check bearings on ends of baler rolls regularly for early signs of failure. (See Lubrication and Maintenance section or see your John Deere dealer.)
- If noticeable changes in machine performance occur indicating that a part is beginning to fail, stop baling immediately. Investigate cause of sounds, smells, or sights which are unusual.
- Promptly eject bales after they have been tied or wrapped. Do not use the baler to transport bales from the field. Do not bring a baler, with a bale inside it, into a building. Never leave a baler unattended with a bale inside the chamber.
- Use extreme care if it is necessary to park a baler in a field of a dry crop or stubble. Whenever possible, park baler on bare ground or in an area surrounded by bare ground. Before leaving a baler which has been operating, verify that there are no areas which are hot enough to start a fire. Do not leave the baler unattended near bales which have been baled wet, because spontaneous combustion can occur.
- If service requires using a welder, cutting torch or grinder, refer to Fire Prevention in Service—Baler section for guidelines which prove useful in preventing fire.
- Use extreme care when smoking around baler.

SF04007,0000C17-19-13JUL16

In Case of Fire

TS227—UN—15APR13

CAUTION: Avoid personal injury.

Stop machine immediately at the first sign of fire. Fire may be identified by the smell of smoke or sight of flames. Because fire grows and spreads rapidly, get off the machine immediately and move safely away from the fire. Do not return to the machine! The number one priority is safety.

Call the fire department. A portable fire extinguisher can put out a small fire or contain it until the fire department arrives; but portable extinguishers have limitations. Always put the safety of the operator and bystanders first. If attempting to extinguish a fire, keep your back to the wind with an unobstructed escape path so you can move away quickly if the fire cannot be extinguished.

Read the fire extinguisher instructions and become familiar with their location, parts, and operation before a fire starts. Local fire departments or fire equipment distributors may offer fire extinguisher training and recommendations.

If your extinguisher does not have instructions, follow these general guidelines:

1. Pull the pin. Hold the extinguisher with the nozzle pointing away from you, and release the locking mechanism.
2. Aim low. Point the extinguisher at the base of the fire.
3. Squeeze the lever slowly and evenly.
4. Sweep the nozzle from side-to-side.

DX,FIRE4-19-22AUG13

Wear Protective Clothing

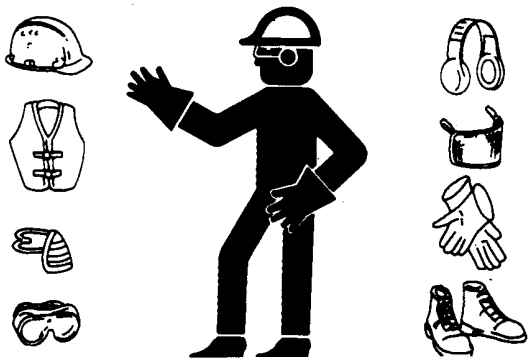

TS206—UN—15APR13

Wear close fitting clothing and safety equipment appropriate to the job.

Prolonged exposure to loud noise can cause impairment or loss of hearing.

Wear a suitable hearing protective device such as earmuffs or earplugs to protect against objectionable or uncomfortable loud noises.

Operating equipment safely requires the full attention of the operator. Do not wear radio or music headphones while operating machine.

DX,WEAR-19-10SEP90

Handle Agricultural Chemicals Safely

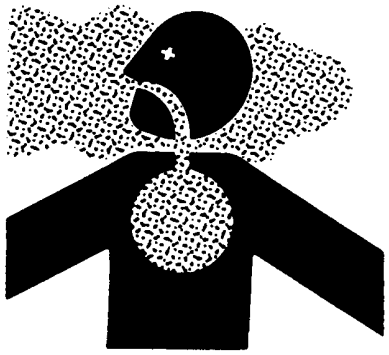

TS220—UN—15APR13

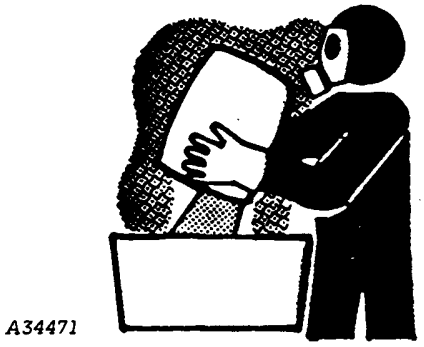

A34471—UN—11OCT88

Chemicals used in agricultural applications such as fungicides, herbicides, insecticides, pesticides, rodenticides, and fertilizers can be harmful to your health or the environment if not used carefully.

Always follow all label directions for effective, safe, and legal use of agricultural chemicals.

Reduce risk of exposure and injury:

- Wear appropriate personal protective equipment as recommended by the manufacturer. In the absence of manufacturer's instructions, follow these general guidelines:
  - Chemicals labeled **'Danger'**: Most toxic. Generally require use of goggles, respirator, gloves, and skin protection.
  - Chemicals labeled **'Warning'**: Less toxic. Generally require use of goggles, gloves, and skin protections.
  - Chemicals labeled **'Caution'**: Least toxic. Generally require use of gloves and skin protection.
- Avoid inhaling vapor, aerosol or dust.
- Always have soap, water, and towel available when working with chemicals. If chemical contacts skin, hands, or face, wash immediately with soap and water. If chemical gets into eyes, flush immediately with water.
- Wash hands and face after using chemicals and before eating, drinking, smoking, or urination.
- Do not smoke or eat while applying chemicals.
- After handling chemicals, always bathe or shower and change clothes. Wash clothing before wearing again.
- Seek medical attention immediately if illness occurs during or shortly after use of chemicals.
- Keep chemicals in original containers. Do not transfer chemicals to unmarked containers or to containers used for food or drink.
- Store chemicals in a secure, locked area away from human or livestock food. Keep children away.
- Always dispose of containers properly. Triple rinse empty containers and puncture or crush containers and dispose of properly.

DX,WW,CHEM01-19-24AUG10

Stay Clear of Rotating Drivelines

TS1644—UN—22AUG95

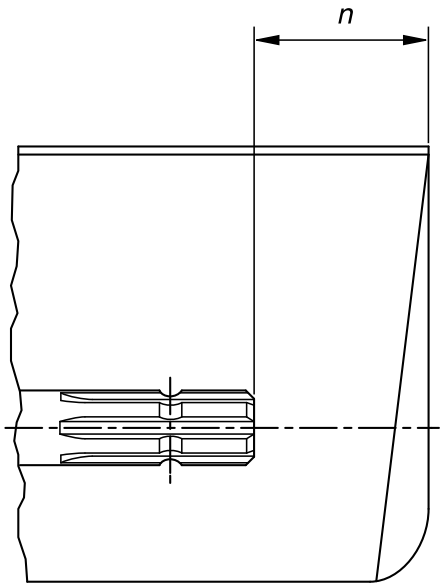

H96219—UN—29APR10

Entanglement in rotating driveline can cause serious injury or death.

Keep tractor master shield and driveline shields in place at all times. Make sure rotating shields turn freely.

Only use power take-off driveshafts with adequate guards and shields.

Wear close fitting clothing. Stop the engine and be sure that PTO driveline is stopped before making adjustments, connections, or cleaning out PTO driven equipment.

Do not install any adapter device between the tractor and the primary implement PTO driveshaft that will allow a 1000 rpm tractor shaft to power a 540 rpm implement at speeds higher than 540 rpm.

Do not install any adapter device that results in a portion of the rotating implement shaft, tractor shaft, or the adapter to be unguarded. The tractor master shield shall overlap the end of the splined shaft and the added adaptor device as outlined in the table.

The angle at which the primary implement PTO driveshaft can be inclined may be reduced depending on the shape and size of the tractor master shield and the shape and size of the guard of the primary implement PTO driveshaft.

Do not raise implements high enough to damage the tractor master shield or guard of primary implement PTO driveshaft. Detach the PTO driveline shaft if it is necessary to increase implement height. (See Attching/ Detaching PTO Driveline)

When using Type 3/4 PTO, inclination and turning angles may be reduced depending on type of PTO master shield and coupling rails.

PTO Type	Diameter	Splines	n ± 5 mm (0.20 in.)
1	35 mm (1.378 in.)	6	85 mm (3.35 in.)
2	35 mm (1.378 in.)	21	85 mm (3.35 in.)
3	45 mm (1.772 in.)	20	100 mm (4.00 in.)
4	57.5 mm (2.264 in.)	22	100 mm (4.00 in.)

DX,PTO-19-28FEB17

Use Safety Lights and Devices

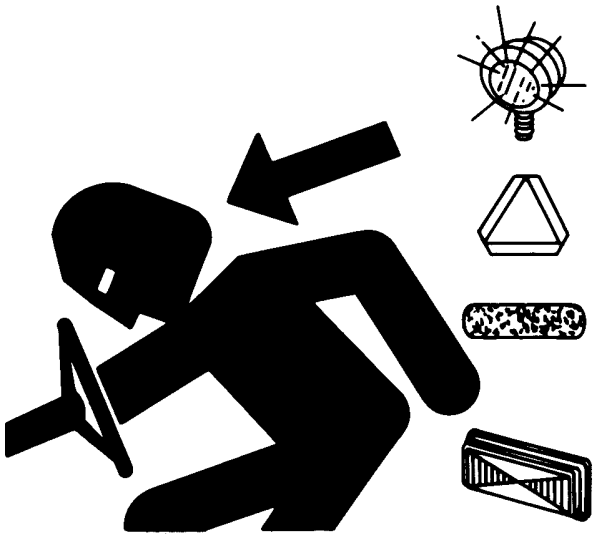

TS951—UN—12APR90

Prevent collisions between other road users, slow moving tractors with attachments or towed equipment, and self-propelled machines on public roads. Frequently check for traffic from the rear, especially in turns, and use turn signal lights.

Use headlights, flashing warning lights, and turn signals day and night. Follow local regulations for equipment lighting and marking. Keep lighting and marking visible, clean, and in good working order. Replace or repair lighting and marking that has been damaged or lost. An implement safety lighting kit is available from your John Deere dealer.

DX,FLASH-19-07JUL99

Use a Safety Chain

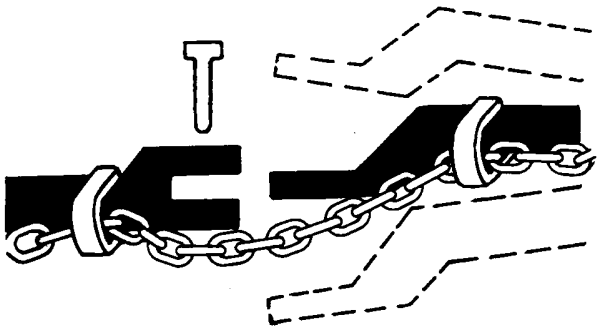

TS217—UN—23AUG88

A safety chain will help control drawn equipment should it accidentally separate from the drawbar.

Using the appropriate adapter parts, attach the chain to the tractor drawbar support or other specified anchor location. Provide only enough slack in the chain to permit turning.

See your John Deere dealer for a chain with a strength

rating equal to or greater than the gross weight of the towed machine. Do not use safety chain for towing.

DX,CHAIN-19-03MAR93

Tow Loads Safely

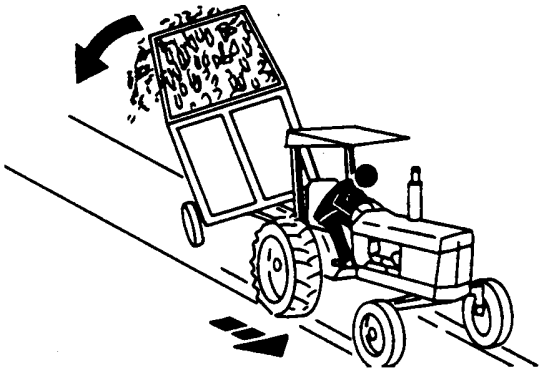

TS216—UN—23AUG88

Stopping distance increases with speed and weight of towed loads, and on slopes. Towed loads with or without brakes that are too heavy for the tractor or are towed too fast can cause loss of control. Consider the total weight of the equipment and its load.

Observe these recommended maximum road speeds, or local speed limits which may be lower:

- If towed equipment does not have brakes, do not travel more than 32 km/h (20 mph) and do not tow loads more than 1.5 times the tractor weight.
- If towed equipment has brakes, do not travel more than 40 km/h (25 mph) and do not tow loads more than 4.5 times the tractor weight.

Ensure the load does not exceed the recommended weight ratio. Add ballast to recommended maximum for tractor, lighten the load, or get a heavier towing unit. The tractor must be heavy and powerful enough with adequate braking power for the towed load. Use additional caution when towing loads under adverse surface conditions, when turning, and on inclines.

DX,TOW-19-02OCT95

Practice Safe Maintenance

TS218—UN—23AUG88

Understand service procedure before doing work. Keep area clean and dry.

Never lubricate, service, or adjust machine while it is moving. Keep hands, feet, and clothing away from power-driven parts. Disengage all power and operate controls to relieve pressure. Lower equipment to the ground. Stop the engine. Remove the key. Allow machine to cool.

Securely support any machine elements that must be raised for service work.

Keep all parts in good condition and properly installed. Fix damage immediately. Replace worn or broken parts. Remove any buildup of grease, oil, or debris.

On self-propelled equipment, disconnect battery ground cable (-) before making adjustments on electrical systems or welding on machine.

On towed implements, disconnect wiring harnesses from tractor before servicing electrical system components or welding on machine.

Falling while cleaning or working at height can cause serious injury. Use a ladder or platform to easily reach each location. Use sturdy and secure footholds and handholds.

DX,SERV-19-28FEB17

Remove Paint Before Welding or Heating

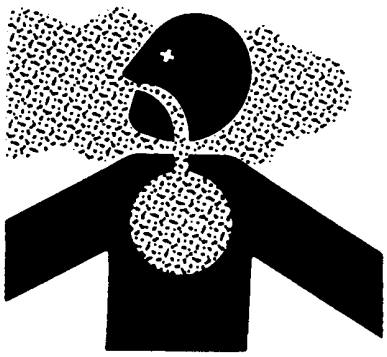

TS220—UN—15APR13

Avoid potentially toxic fumes and dust.

Hazardous fumes can be generated when paint is heated by welding, soldering, or using a torch.

Remove paint before heating:

- Remove paint a minimum of 100 mm (4 in.) from area to be affected by heating. If paint cannot be removed, wear an approved respirator before heating or welding.
- If you sand or grind paint, avoid breathing the dust. Wear an approved respirator.
- If you use solvent or paint stripper, remove stripper with soap and water before welding. Remove solvent or paint stripper containers and other flammable material from area. Allow fumes to disperse at least 15 minutes before welding or heating.

Do not use a chlorinated solvent in areas where welding will take place.

Do all work in an area that is well ventilated to carry toxic fumes and dust away.

Dispose of paint and solvent properly.

DX,PAINT-19-24JUL02

Avoid Heating Near Pressurized Fluid Lines

TS953—UN—15MAY90

Flammable spray can be generated by heating near pressurized fluid lines, resulting in severe burns to yourself and bystanders. Do not heat by welding, soldering, or using a torch near pressurized fluid lines or other flammable materials. Pressurized lines can accidentally burst when heat goes beyond the immediate flame area.

DX,TORCH-19-10DEC04

Avoid High-Pressure Fluids

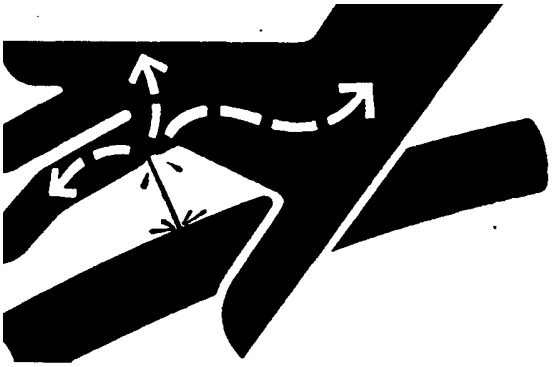

X9811—UN—23AUG88

Inspect hydraulic hoses periodically – at least once per year – for leakage, kinking, cuts, cracks, abrasion, blisters, corrosion, exposed wire braid or any other signs of wear or damage.

Replace worn or damaged hose assemblies immediately with John Deere approved replacement parts.

Escaping fluid under pressure can penetrate the skin causing serious injury.

Avoid the hazard by relieving pressure before disconnecting hydraulic or other lines. Tighten all connections before applying pressure.

Search for leaks with a piece of cardboard. Protect hands and body from high-pressure fluids.

If an accident occurs, see a doctor immediately. Any fluid injected into the skin must be surgically removed within a few hours or gangrene may result. Doctors unfamiliar with this type of injury should reference a knowledgeable medical source. Such information is available in English from Deere & Company Medical Department in Moline, Illinois, U.S.A., by calling 1-800-822-8262 or +1 309-748-5636.

DX,FLUID-19-12OCT11

Decommissioning — Proper Recycling and Disposal of Fluids and Components

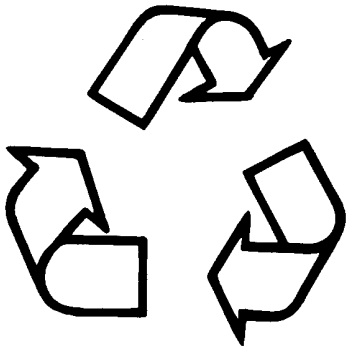

TS1133—UN—15APR13

Safety and environmental stewardship measures must be taken into account when decommissioning a machine and/or component. These measures include the following:

- Use appropriate tools and personal protective equipment such as clothing, gloves, face shields or glasses, during the removal or handling of objects and materials.
- Follow instructions for specialized components.
- Release stored energy by lowering suspended machine elements, relaxing springs, disconnecting the battery or other electrical power, and releasing pressure in hydraulic components, accumulators, and other similar systems.
- Minimize exposure to components which may have residue from agricultural chemicals, such as fertilizers and pesticides. Handle and dispose of these components appropriately.
- Carefully drain engines, fuel tanks, radiators, hydraulic cylinders, reservoirs, and lines before recycling components. Use leak-proof containers when draining fluids. Do not use food or beverage containers.
- Do not pour waste fluids onto the ground, down a drain, or into any water source.
- Observe all national, state, and local laws, regulations, or ordinances governing the handling or disposal of waste fluids (example: oil, fuel, coolant, brake fluid); filters; batteries; and, other substances or parts. Burning of flammable fluids or components in other than specially designed incinerators may be prohibited by law and could result in exposure to harmful fumes or ashes.
- Service and dispose of air conditioning systems appropriately. Government regulations may require a certified service center to recover and recycle air conditioning refrigerants which could damage the atmosphere if allowed to escape.
- Evaluate recycling options for tires, metal, plastic, glass, rubber, and electronic components which may be recyclable, in part or completely.
- Contact your local environmental or recycling center, or your John Deere dealer for information on the proper way to recycle or dispose of waste.

DX,DRAIN-19-01JUN15

Replace Safety Signs

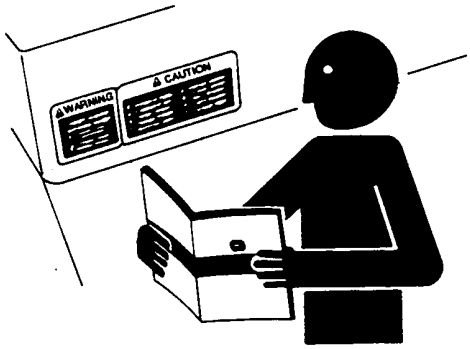

TS201—UN—15APR13

Replace missing or damaged safety signs. Use this operator’s manual for correct safety sign placement.

There can be additional safety information contained on parts and components sourced from suppliers that is not reproduced in this operator's manual.

DX,SIGNS-19-18AUG09

Front Frame Decals

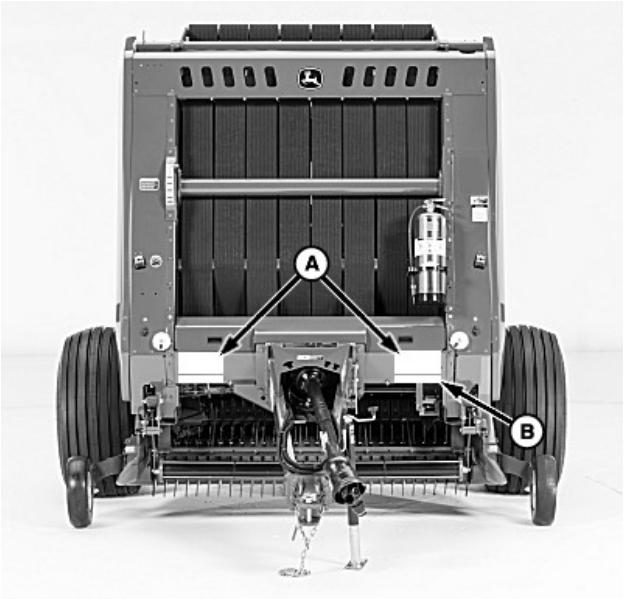

E85395—UN—05DEC17

Front Frame

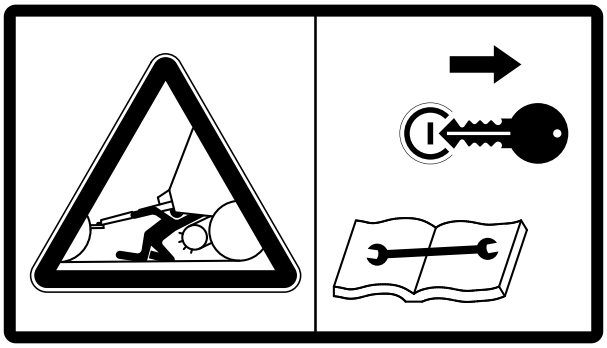

SSE309022—UN—26FEB09

(A) Danger

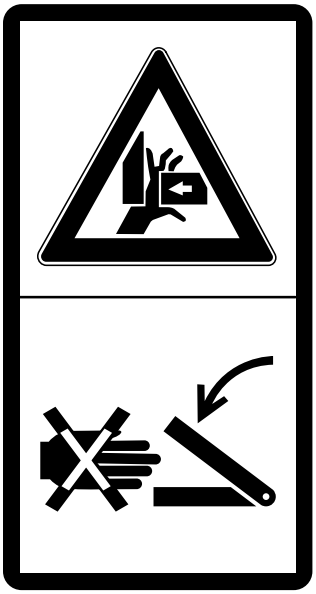

SSH154128—UN—24FEB09

(B) Warning

(A)—Danger:

Do not take chances! To avoid injury or death by being pulled into the machine:

Do not attempt to feed crop or twine into baler or unplug feed area while the baler is running. The baler feeds material faster than you can release it.

Disengage PTO and shut off engine.

(B)—Warning:

Avoid crushing between the twine arm and twine cutter.

Twine arm can move unexpectedly.

Keep hands out of its path and turn off power.

OUO6064,0001FE9-19-18DEC17

Front Frame Decals (Left-Hand Side)

E85284—UN—31OCT17

Left-Hand Side

E85282—UN—14NOV17

(A) Caution

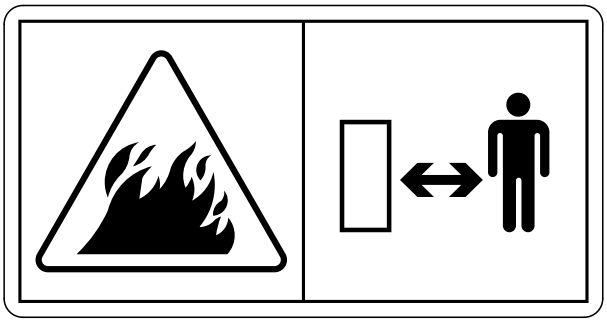

SSCXT13504—UN—28FEB14

(B) Important

(A)—Caution:

Avoid burns or smoke inhalation.

At the first signs of flames or smoke:

1. Stop the machine.
2. Get away.
3. Do not return to the machine.

(B)—Important:

There is a risk of fire during operation of the baler, especially in dry material.

To minimize this risk:

1. Check often for any crop buildup, wrapping, or overheating around all moving parts.
2. Attach a pressurized water fire extinguisher to the baler (see Operator's Manual for more information).

DP99999,0000E9B-19-18DEC17

Tongue Decal (Left-Hand Side)

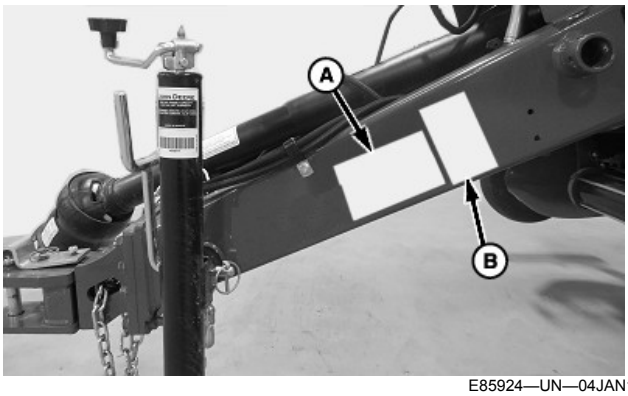

E85924—UN—04JAN18

Tongue (Left-Hand Side)

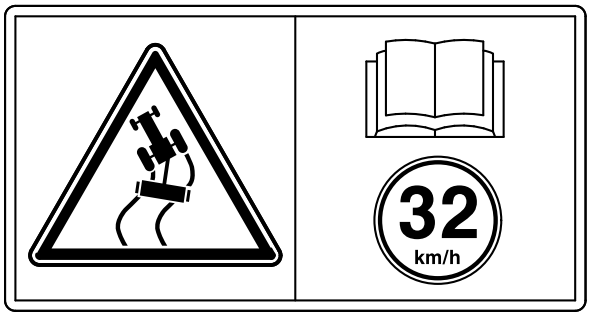

SSA83030—UN—21FEB06

(A) Warning

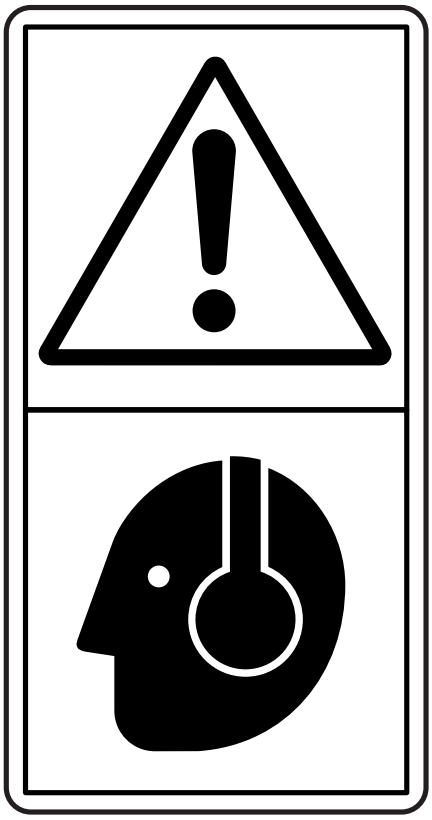

SSSU20277—UN—04JAN18

(B)—Warning

(A)—Warning:

Do not exceed the maximum transport speed of 32 km/h (20 mph).

Exceeding this speed can result in loss of control during transport or braking and serious injury or death.

Transport only with a properly ballasted tractor and a properly attached safety tow chain.

Do not transport with a motor vehicle.

Reduce speed and use additional caution when on inclines, towing under adverse conditions, and turning.

(B)—Warning:

Protect against noise.

There are many variables that affect the sound level range: including machine configuration, condition and maintenance level of the machine, ground surface, operating environmental, duty cycles, ambient noise, and attachments.

Prolonged exposure to loud noise can cause impairment and loss of hearing.

To protect against objectionable or uncomfortable loud noises wear a suitable hearing protective device such as earmuffs or earplugs.

DP99999,0000E9C-19-05JAN18

Driveline Decal

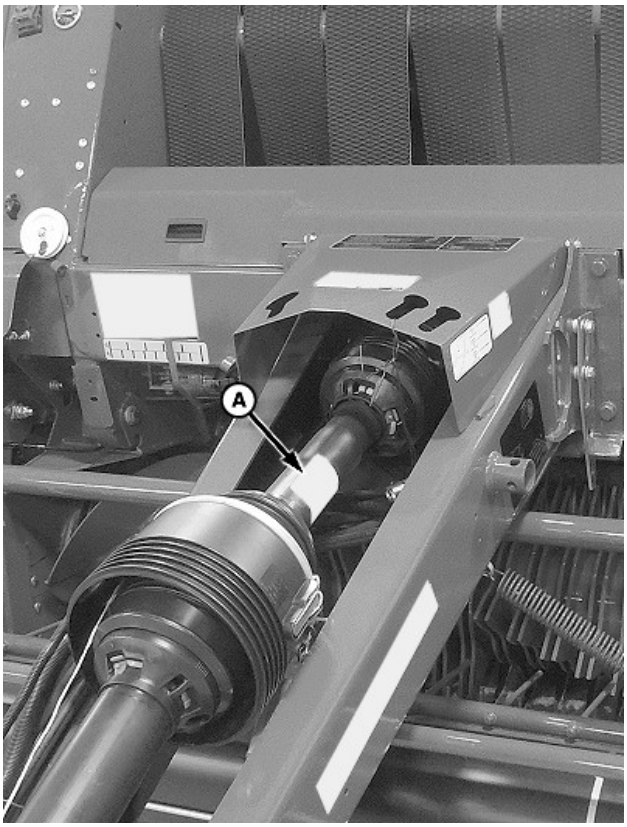

E85561—UN—09NOV17

Driveline

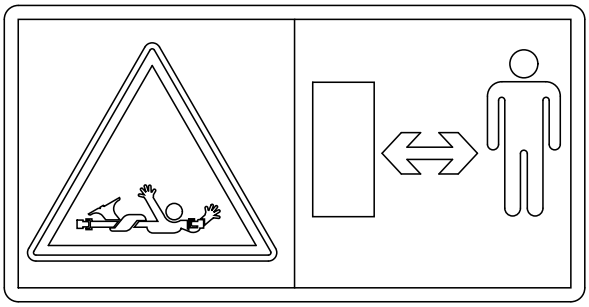

SSE307458—UN—18SEP08

(A) Danger

(A)—Danger:

Entanglement in the rotating driveline can cause serious injury or death.

Keep all shields in place.

Avoid contact with rotating parts.

OUO6064,0001FEA-19-18DEC17

PTO Cover Decals (Left-Hand Side)

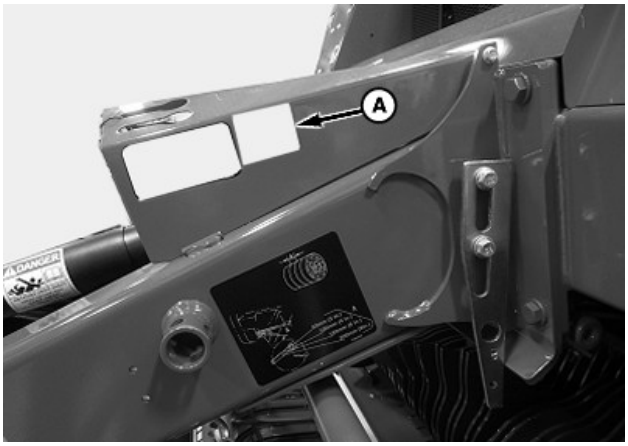

E84643—UN—26SEP17

PTO Cover

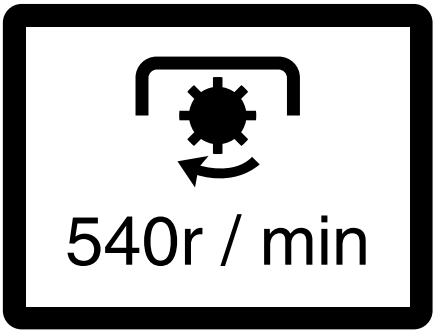

SSCC41458—UN—24FEB09

(A) Caution (540 rpm)

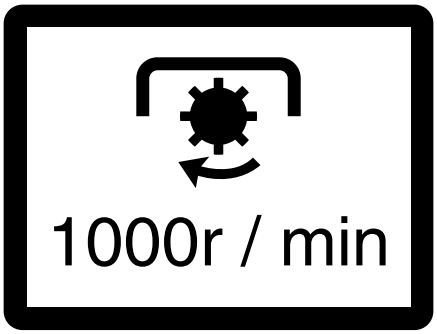

E85621—UN—28NOV17

(A) Caution (1000 rpm)

(A)—Caution:

Operate only with either 540 rpm or 1000 rpm PTO.

OUO6064,0001FEB-19-18DEC17

PTO Cover Decal (Top)

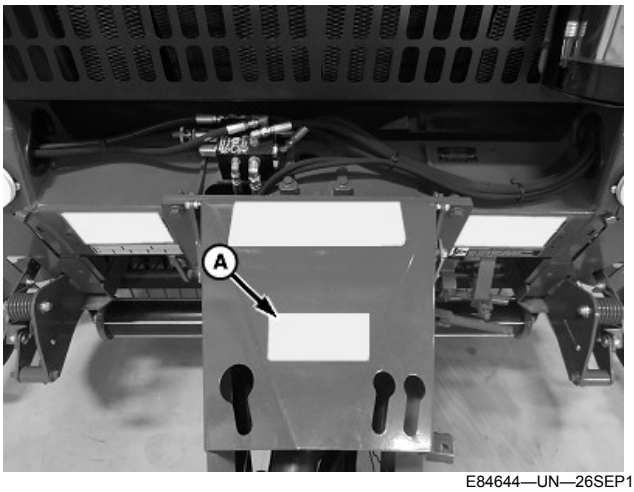

E84644—UN—26SEP17

PTO Cover (Top)

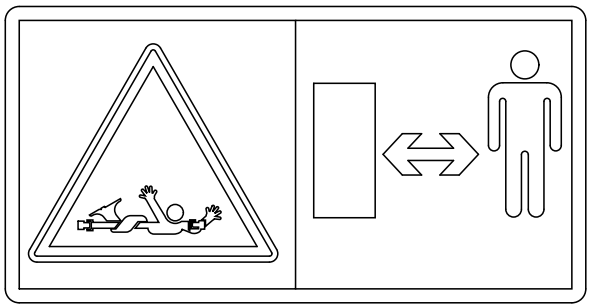

SSE307458—UN—18SEP08

(A) Danger

(A)—Danger:

Entanglement in the rotating driveline can cause serious injury or death.

Keep all shields in place.

Avoid contact with rotating parts.

DP99999,0000E9E-19-18DEC17

Left-Hand Side Door Decals

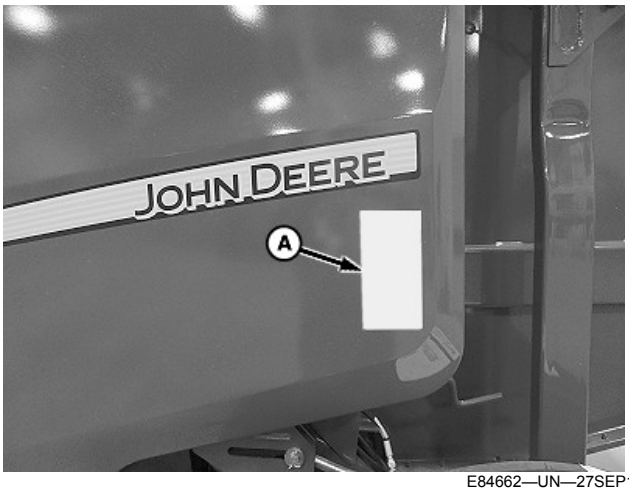

E84662—UN—27SEP17

Left-Hand Side Door

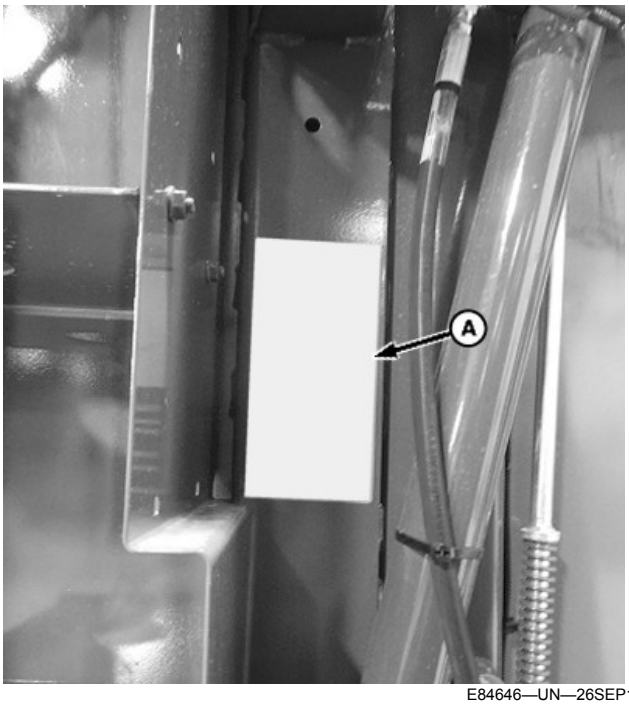

E84646—UN—26SEP17

Left-Hand Side Door (Open)

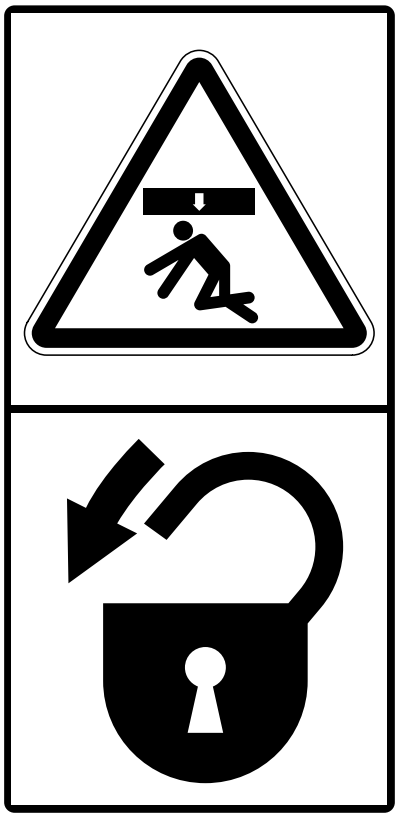

SSZ60331—UN—27JAN10

(A) Warning

(A)—Warning:

Engage gate lock before working on or around the gate in the raised position.

Stand clear before unlocking gate.

OUO6064,0001FEC-19-18DEC17

Left-Hand Side Decals

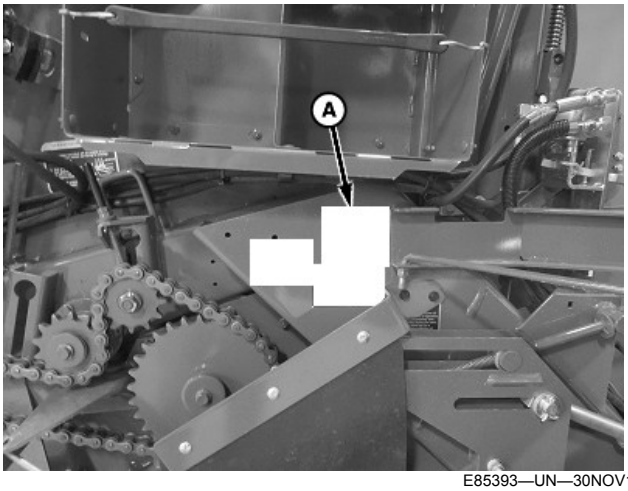

E85393—UN—30NOV17

Left-Hand Side (Door Open

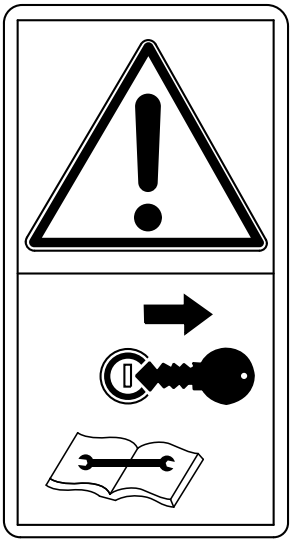

SSZ59872—UN—16JUL08

(A) Caution

(A)—Caution:

Keep all shields in place.

Disengage and shut off all engine and/or motor power before servicing or unclogging the machine.

Keep hands, feet, and clothing away from power-driven parts.

OUO6064,0001FED-19-18DEC17

Right-Hand Side Door Decals

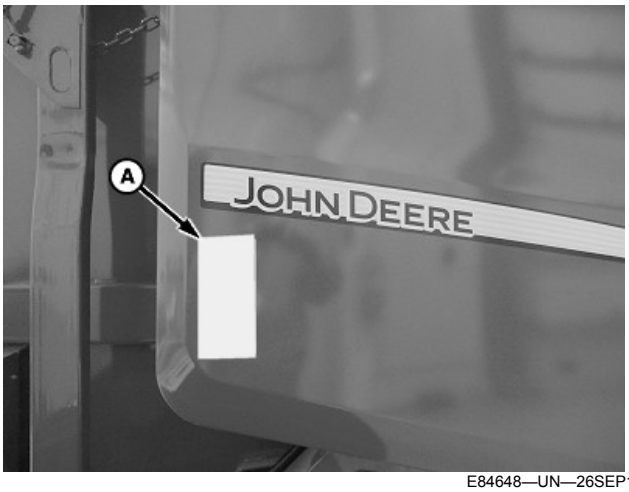

E84648—UN—26SEP17

Right-Hand Side Door

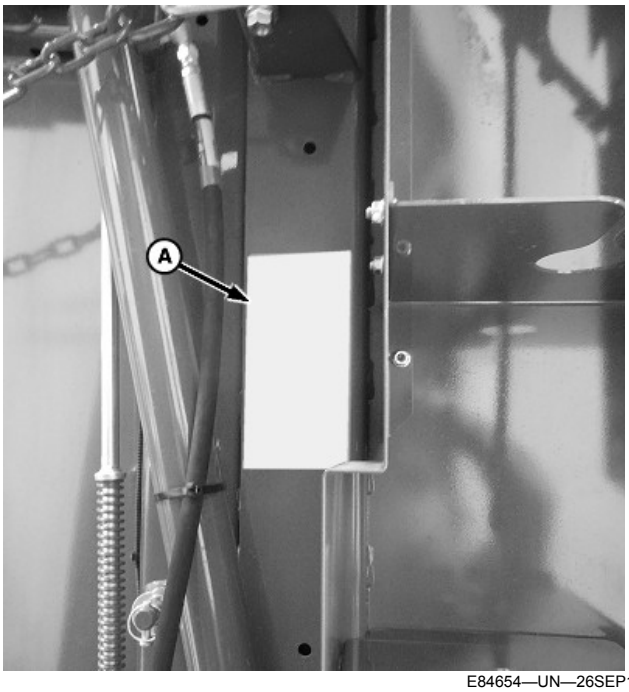

E84654—UN—26SEP17

Right-Hand Side (Door Open)

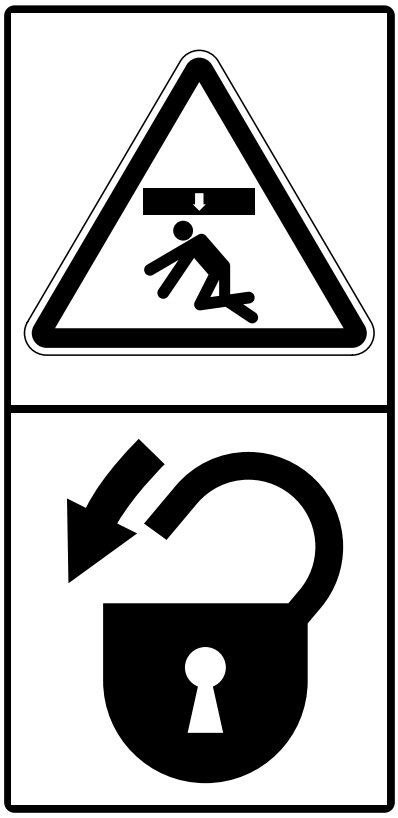

SSZ60331—UN—27JAN10

(A) Warning

(A)—Warning:

Engage gate lock before working on or around the gate in the raised position.

Stand clear before unlocking gate.

OUO6064,0001FEE-19-18DEC17

Right-Hand Side Decals

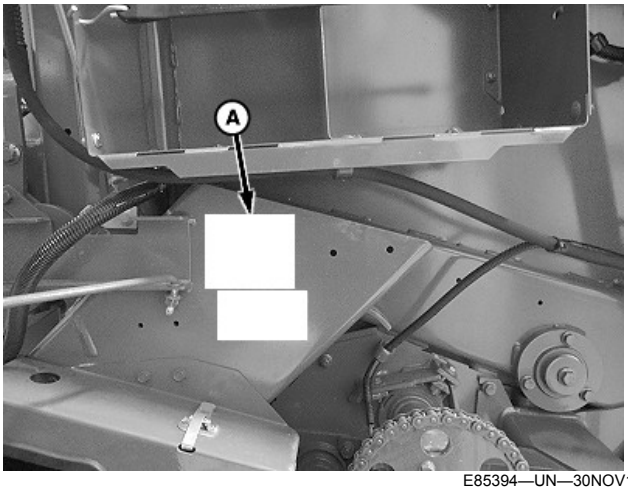

E85394—UN—30NOV17

Right-Hand Side (Door Open)

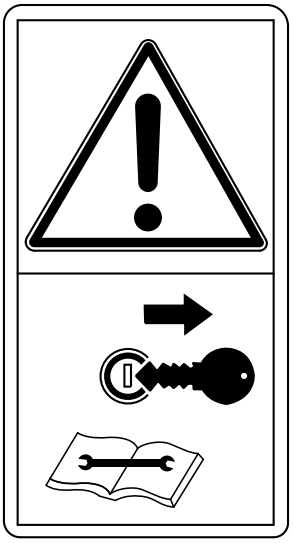

SSZ59872—UN—16JUL08

(A) Caution

(A)—Caution:

1. Keep all shields in place.
2. Disengage and shut off all engine and/or motor power before servicing or unclogging the machine.
3. Keep hands, feet, and clothing away from power-driven parts.

OUO6064,0001FEF-19-18DEC17

Rear of Baler Decal

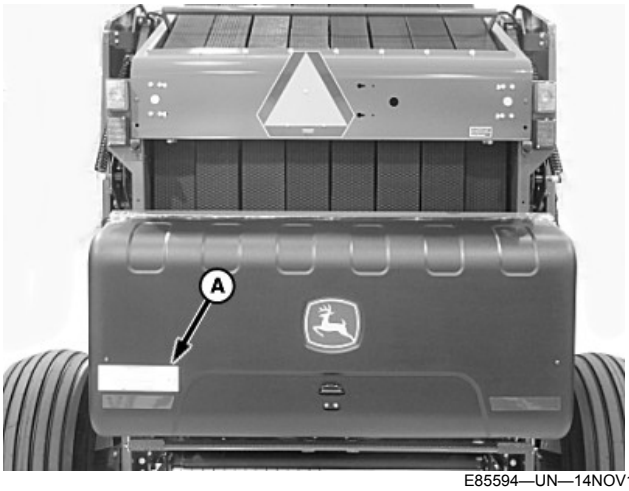

E85594—UN—14NOV17

Rear of Baler

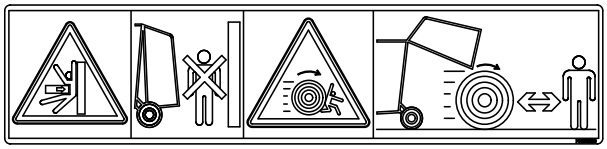

SSE67780—UN—11SEP12

(A) Warning

(A)—Warning:

Help prevent crushing injury: Be sure that bystanders stand clear before operating the gate and unloading the bale.

Stay clear of the gate and push bar while being raised or lowered.

Watch for a rolling bale.

DP99999,0000EA1-19-18DEC17

Surface Wrap Frame Decal (Cover Open)

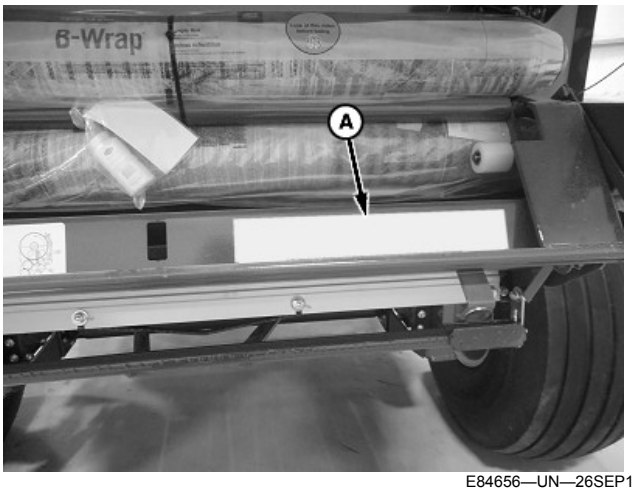

E84656—UN—26SEP17

Surface Wrap Frame (Cover Open)

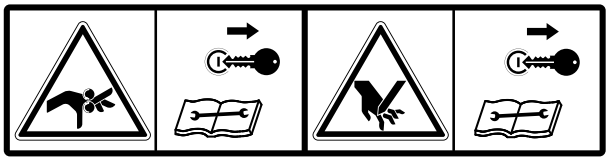

SSE309020—UN—26FEB09

(A) Warning

(A)—Warning:

Avoid injury from entanglement in the moving rolls.

Disengage the drive and shut off the engine before servicing.

The knife is sharp and can move without warning.

Shut off the machine before servicing the knife.

Keep hands clear of sharp edges.

DP99999,0000EA2-19-18DEC17

Surface Wrap Cut-Off Actuator Decal (Cover Open)

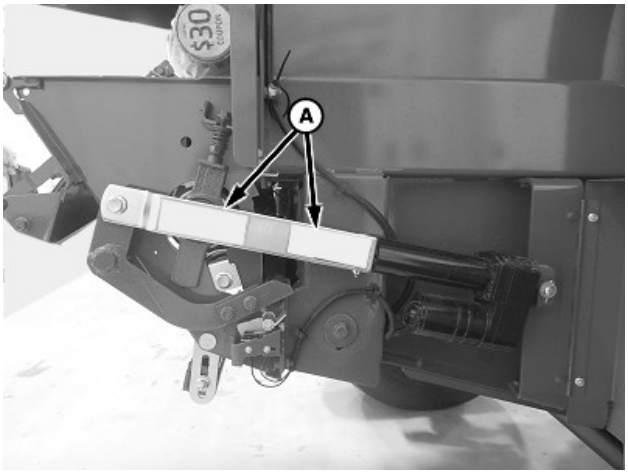

E84657—UN—26SEP17

Wrap Cut-off Actuator (Cover Open)

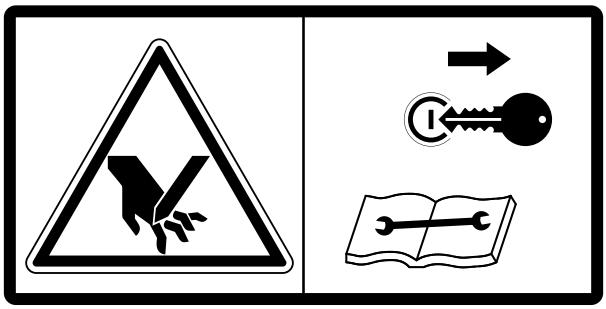

SSE309062—UN—26FEB09

(A) Warning

(A)—Warning:

The knife is sharp and the knife arm can move without warning.

Shut off all power before servicing the knife.

Keep hands clear of sharp edges.

DP99999,0000EA3-19-18DEC17

Gate Frame Decal (Both Sides)

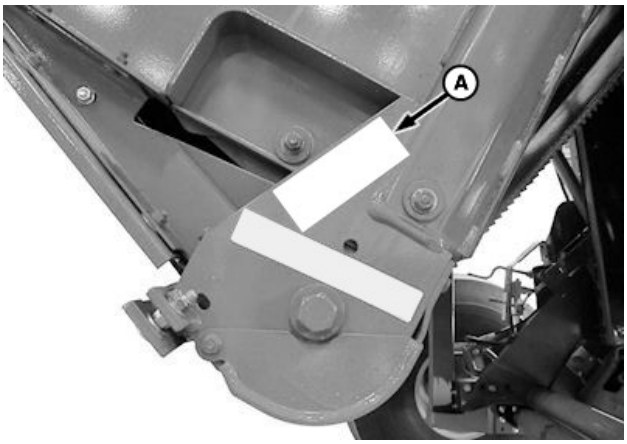

E84658—UN—26SEP17

Gate Frame (Both Sides)

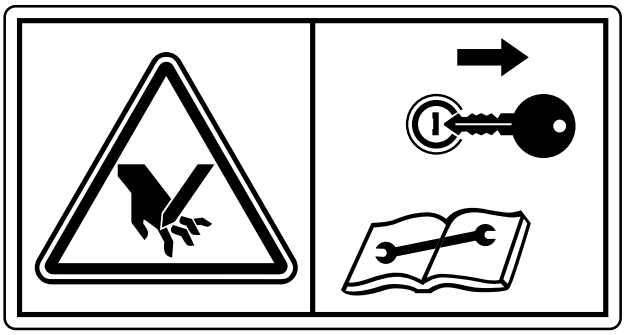

SSE72518—UN—07FEB14

(A) Warning

(A)—Warning:

Avoid injury to fingers. Shut off all power before servicing.

Keep hands clear when the machine is running.

DP99999,0000EA4-19-18DEC17

Gauge Wheel Arm Decal (Both Sides)

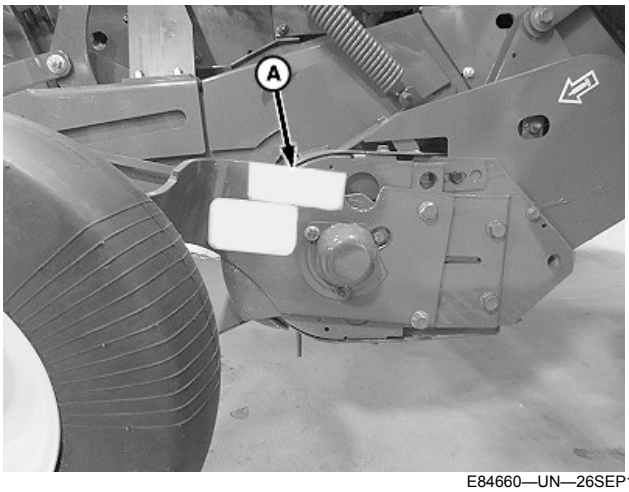

E84660—UN—26SEP17

Gauge Wheel Arm (Both Sides)

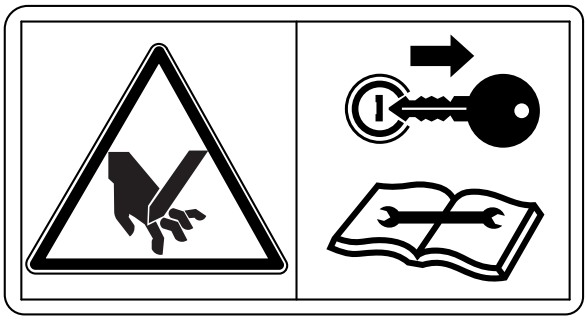

SSE67935—UN—18SEP12

(A) Warning

(A)—Warning:

Avoid injury to fingers. Shut off all power before servicing.

Keep hands clear when the machine is running.

DP99999,0000EA5-19-18DEC17

Precutter Decals

E85557—UN—09NOV17

Both Sides (Left-Hand Side Shown)

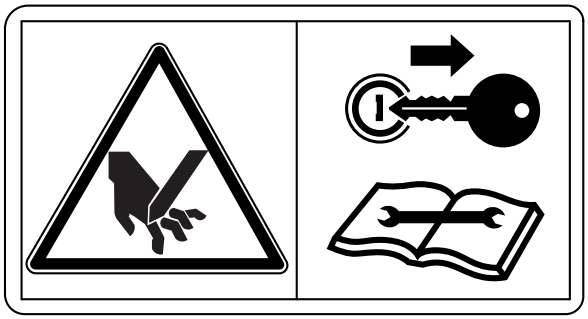

SSE67935—UN—18SEP12

(A) Warning

(A)—Warning:

Precutter knives are extremely sharp and can move without warning.

To avoid serious injury, shut off all power and engage lock-out valve before servicing knives or unclogging baler. See Operator's Manual.

Keep hands clear of sharp edges.

OUO6064,0001FE6-19-17JAN18

Gate Lock Decal

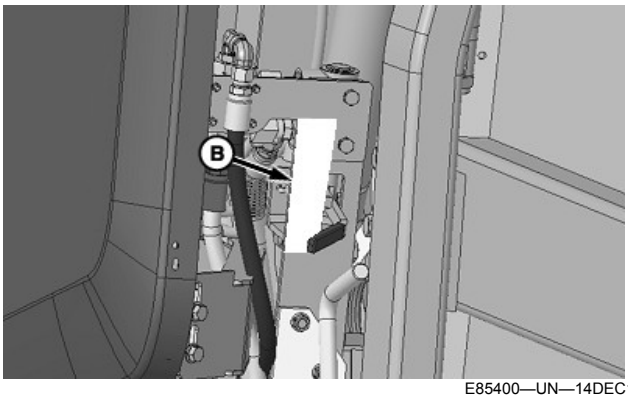

E85400—UN—14DEC17

Gate Lock Decal (Left-Hand Side Only)

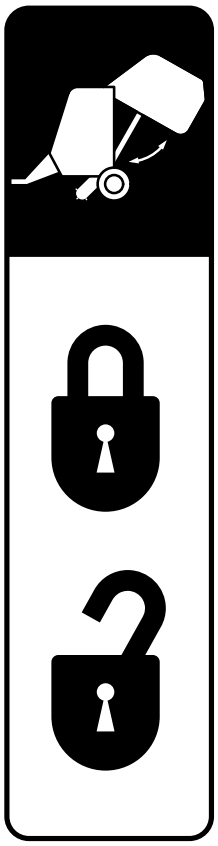

SSFH312065—UN—15DEC17

(A)—Warning

(A)—Warning:

Engage the gate lock before working on or around the gate in the raised position.

Stand clear before unlocking the gate lock.

SF04007,00010E3-19-17JAN18

In the Case of Fire—Supplemental Information

TS227—UN—15APR13

Stop baling immediately at the first sign of flames, smoke, scorched smell, or an unusual sound.

CAUTION: Do not risk personal injury. Burning tires and heated gas springs can explode unexpectedly. Avoid burns or smoke inhalation. Do not attempt to extinguish a fire that is too far advanced; move safely away from the fire.

If the fire can be extinguished or contained safely, proceed carefully and follow these guidelines.

1. Avoid the fire overtaking the tractor by positioning the tractor upwind from the baler.
2. Open the baler gate and eject any crop material from the bale chamber. Drive away from the material, shutoff the PTO, stop the tractor, and set the parking brake.
3. Pull the drawbar pin, unhook safety chains, and then drive the tractor away from the baler (letting the driveline, hydraulic, and electrical connections pull free).
4. If possible, call the fire department for help and give them your location.
5. Do not position yourself under an open baler gate. If the baler is on fire, the gate can fall.
6. Stay upwind of the fire; follow instructions on your fire extinguisher when available.

DP99999,0000E6E-19-24OCT17

Adjust Drawbar

CAUTION: To avoid personal injury, use locking pins to hold drawbar stationary when operating PTO-driven implements.

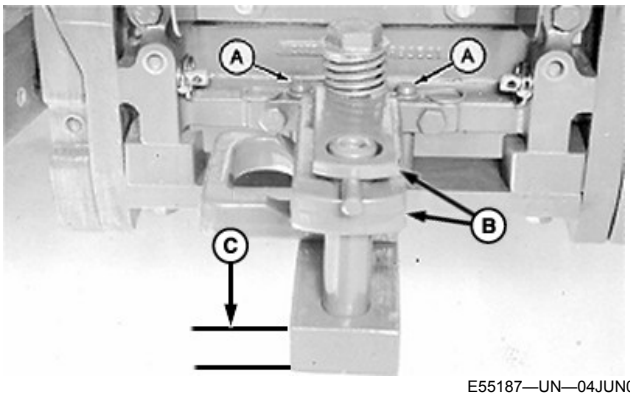

E55187—UN—04JUN07

John Deere 7000 Series Tractor Shown

A—Locking Pins
B—Clevis
C—Drawbar Thickness

1. Remove locking pins (A) and slide drawbar to center position (shown).
2. Install locking pins.
3. If equipped, remove the clevis (B).

IMPORTANT: To avoid baler tongue or hitch damage, do not operate the baler with tractor drawbar thicker than 51 mm (2.0 in).

4. Measure drawbar thickness (C). Baler tongue hitch is compatible with tractor drawbar thickness up to 51 mm (2.0 in).
5. Position 3-point hitch lower link sway blocks to provide maximum ground to tractor clearance. (See tractor operator's manual.)

IMPORTANT: If a shaft adapter is used to reduce 44 mm (1-3/4 in) diameter shaft to 35 mm (1-3/8 in) diameter shaft, measure from the end of the adapter to the drawbar hole.

Failure to conform to the following setup dimensions can result in serious powerline damage.

6. If the drawbar is offset, turn the drawbar so the offset is down, as shown.

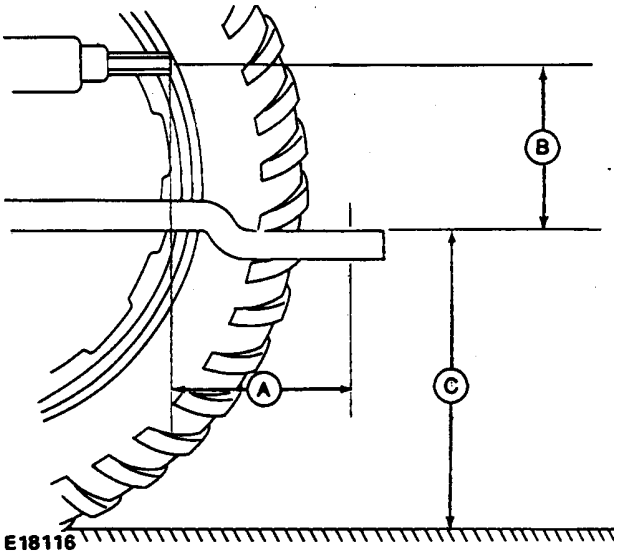

E18116—UN—12SEP88

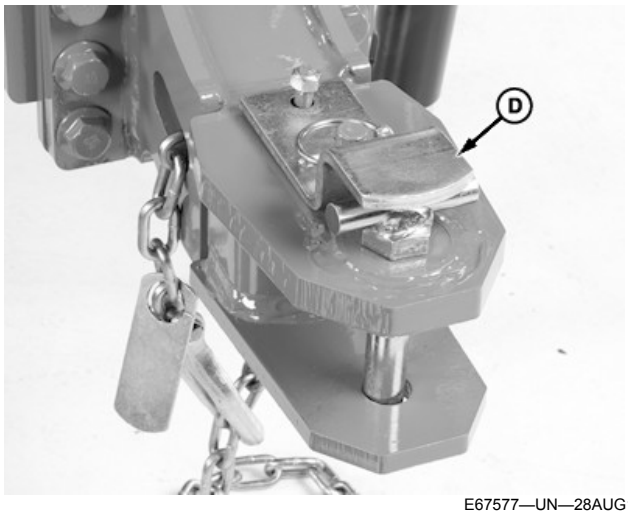

E67577—UN—28AUG12

A—Dimension, End of PTO to Hole in Drawbar
B—Dimension, Center of PTO to Top of Drawbar
C—Dimension, Top of Drawbar to Ground
D—Hitch Strap

7. Set the drawbar to the following dimensions:

PTO Size	A mm (in)	B mm (in)	C mm (in)
540 rpm	356 (14)	152—305 (6—12)	330—508 (13—20)
35 mm (1-3/8 in), 1000 rpm	406 (16)	152—305 (6—12)	330—508 (13—20)
44 mm (1-3/4 in), 1000 rpm	508 (20)	203—305 (8—12)	330—559 (13—22)

IMPORTANT: To avoid powerline damage when front of tractor points down, there must be a minimum of 76—89 mm (3.0—3.5 in) clearance (B) between powerline and top of hitch strap (D). Measure on level ground.

If the tractor drawbar is too low the following problems can occur:

- Drawbar can drag tall windrows
- Reduced feeding capacity by closing the feed opening
- Reduced pickup transport clearance
- Inadequate pickup float at recommended spring settings
- Slow bale discharge

To increase the drawbar height, flip the drawbar over (offset up).

If the tractor drawbar is too high the following problems can occur:

- Pickup teeth will not touch ground
- Gate will not clear the bale during discharge
- Clearance (B) between powerline and top of hitch strap can be inadequate when front of tractor noses down.

DP99999,0000D5C-19-24MAY17

Tractor Drawbar (Heavy-Duty)

IMPORTANT: Some tractors are not equipped with a drawbar strong enough for use with the baler. If so, replace drawbar with a heavy-duty drawbar.

Inspect your tractor drawbar frequently for cracking or bending. Replace it immediately if any damage is observed.

See your John Deere dealer for information on special heavy-duty drawbars that are available for many John Deere tractor models.

PP98408,0000FE3-19-11FEB13

Three-Point Hitch Position

IMPORTANT: To prevent damage to PTO driveline when making turns, lock tractor lower lift links in the up position.

Lock tractor lower lift links in the up position. (See tractor operator's manual.)

PP98408,0000FE4-19-11FEB13

Select Tractor PTO Speed

E84130—UN—17AUG17

Tractor PTO Speed (rpm)

IMPORTANT: Prevent incorrect operation or damage to baler. Never operate a baler equipped for 540 rpm operation with a tractor at a higher PTO speed.

NOTE: The proper tractor PTO speed is shown on a tag on the front of the baler .

To install the appropriate PTO shaft and set the PTO speed, see the tractor Operator's Manual .

DP99999,0000D8B-19-12SEP17

Adjust Tractor Wheels

NOTE: Adjust tractor wheels toward the upper end of specifications to improve:

- *Bale shape by crowding ends of pickup*
- *Ability to pick up crop*

If the tread setting is too narrow, the operator cannot make properly shaped bales without driving on the windrow. Driving on the windrow can result in bales with soft ends and loose twine. (See INTERPRET BALE SHAPE BARS and WEAVE IN THE WINDROW in Operating the Baler section.)

E67206—UN—07AUG12

Adjust the front wheels to provide an inside tire-to-tire dimension as specified in the following table.

Front Wheel Spacing	
Baler Model	**Tire-to-Tire Inside Dimension**
460M	1372—1524 mm (54—60 in)
560M	1676—1829 mm (66—72 in)

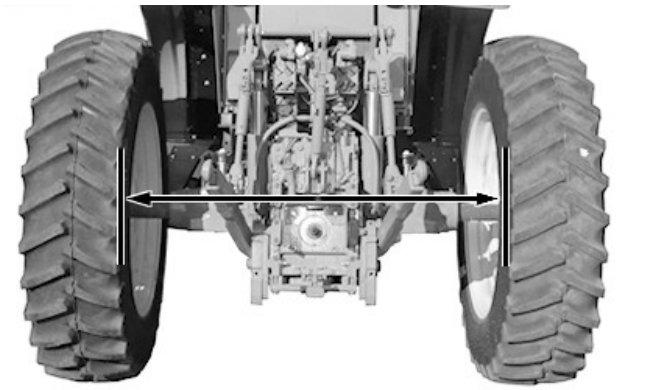

E67207—UN—07AUG12

Adjust the rear tractor wheels to provide an inside tire-to-tire dimension as specified in the following table. To prevent machine damage, do not exceed outside dimension limitations.

Tire-to-Tire Inside Dimension	
460M	1372—1524 mm (54—60 in) Outside dimension not to exceed 2591 mm (102 in)
560M	1676—1829 mm (66—72 in) Outside dimension not to exceed 2743 mm (108 in)

If gathering wheels are installed, the outside dimension of the rear wheels must not exceed:

- 460M: 2286 mm (90 in)
- 560M: 2388 mm (94 in)

IMPORTANT: Prevent damage to the PTO driveline, tractor tires, baler frame, and gathering wheels. Do not make short turns or cause the baler to jackknife while backing.

DP99999,0000D0D-19-05JUL17

Check Ballast, Wheel Spacing, and Tire Inflation

Provide sufficient weight to stabilize tractor when operating on hilly land or other adverse conditions. (See your tractor operator's manual).

To insure proper stability, adjust ballast, wheel spacing, and tire inflation according to tractor operator's manual.

PP98408,0000FE6-19-11FEB13

Adjust Tractor Hydraulic Outlets

The tractor must have at least one double-acting selective control valve (SCV).

If the baler is equipped with the optional hydraulic pickup lift, the tractor must have at least two SCVs.

NOTE: Check times with no bale in chamber and hot oil. Use the same flow setting in the extend and retract directions.

Adjust the tractor hydraulic outlets to provide approximately a 5 second gate opening time.

When lowering the baler gate, avoid putting hydraulics into float position. The SCV lever must return to the neutral position.

See Hydraulics and Selective Control Valves in the tractor Operator's Manual.

DP99999,0000DA4-19-05JUL17

Tractor Convenience Outlet

John Deere 55 Series, 6000, 7000, or 8000 Models

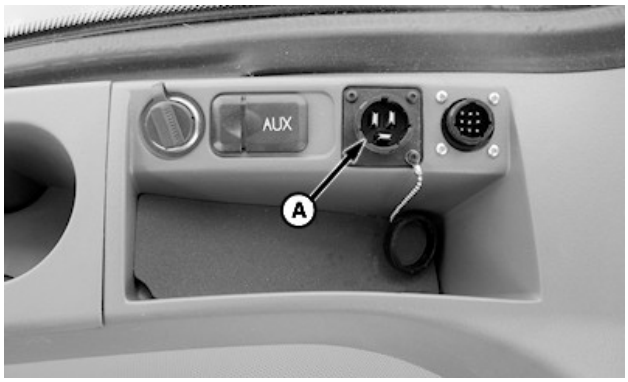

E66075—UN—19JUN12

A—Convenience Outlet

Plug the BaleTrak™ power cable into the standard convenience outlet (A) on the side console.

BaleTrak is a trademark of Deere & Company

Tractor Models Without a Convenience Power Outlet

E39605—UN—27NOV95

Order a convenience outlet kit from your John Deere dealer. The kit includes 12-gauge wires and a circuit breaker. When installing the kit, connect the power and the ground wires directly to the battery terminal clamp bolts.

IMPORTANT: If equipped with the BaleTrak™ Pro or the BaleTrak™ Plus, the monitor-controller is polarity sensitive. The red lead from the monitor-controller power input MUST be connected to the positive (+) side of a 12 V system. Failure to connect the monitor-controller properly can damage the system or prevent proper operation.

Other Tractor Models with a Convenience Power Outlet

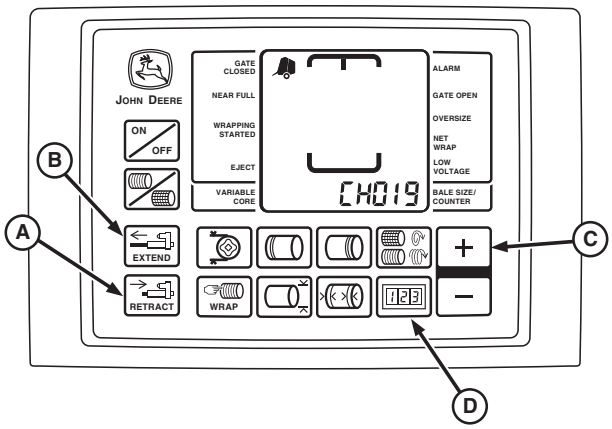

E52484—UN—24JUN03

A—RETRACT Key
B—EXTEND Key
C—PLUS Key
D—COUNTER Key

To determine if the convenience power outlet provides adequate power for the BaleTrak™ Pro or Plus system, complete the following check:

With the tractor engine running and the monitor in the twine mode:

1. Press and hold COUNTER key (D) while turning on the monitor. Continue to hold the COUNTER key and press the PLUS key (C) until CH019 appears in the digital display.
2. Release the COUNTER key. View the voltage readout.
3. Using the EXTEND key (B), extend the twine actuator slightly.
4. Push and hold RETRACT key (A) until the actuator stalls out in the cut-off position and note the voltage displayed.

IMPORTANT: The BaleTrak™ Pro or the BaleTrak™ Plus monitor-controller is polarity sensitive. The red lead from the monitor-controller power input MUST be connected to the positive (+) side of a 12 V system.

NOTE: If a convenience outlet is needed, order a convenience outlet kit from your John Deere dealer.

5. If the voltage is less than 9.7 V, install a convenience outlet kit. Connect the power and the ground wires directly to the battery terminal clamp bolts.

DP99999,0000DAB-19-18SEP17

Install BaleTrak™ Monitor-Controller on Open-Station Tractor

NOTE: Monitor-controller mounting bracket is available from your John Deere dealer.

E40573—UN—22JUN96

Mount monitor-controller bracket on cowling or fender area. Be sure to check for mounting hardware clearance before drilling.

An additional monitor-controller unit is available to allow convenient changing of the baler from one tractor to another.

DP99999,0000DBA-19-26JUL17

BaleTrak is a trademark of Deere & Company

Install BaleTrak™ Monitor-Controller in ComfortGard™ Cab

NOTE: On some tractors, it is necessary to remove the corner post panel to gain access to mounting studs. Holes must be drilled in the panel to install bracket.

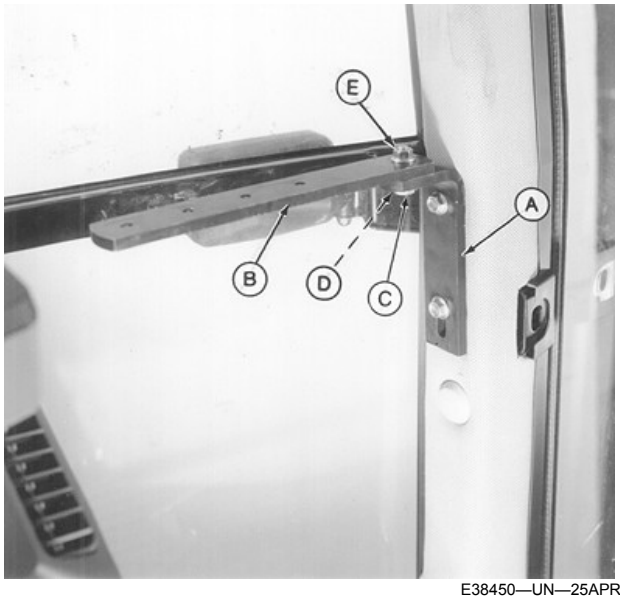

E38450—UN—25APR95

A—Angle Bracket
B—Mounting Strap
C—Cap Screw, M10 x 35 mm
D—Washer
E—Flange Nut

1. Remove top two plugs from the lower right-hand front cab post.
2. Attach angle bracket (A) to the corner post using M10 x 20 flange-head cap screws.
3. Attach the monitor-controller mounting strap (B) to the angle bracket (A) using cap screw (C), washer (D), and flange nut (E).

E52435—UN—16JUN03
BaleTrak™ Pro Monitor-Controller

E84329—UN—06SEP17
BaleTrak™ Plus Monitor-Controller

A—Monitor-Controller

4. Attach the pivot bracket on the monitor-controller (A) to the mounting strap using a M6 x 16 cap screw.
5. Route the monitor-controller wiring harness along the right-hand side of the cab, away from operating levers, and toward the rear of the cab.

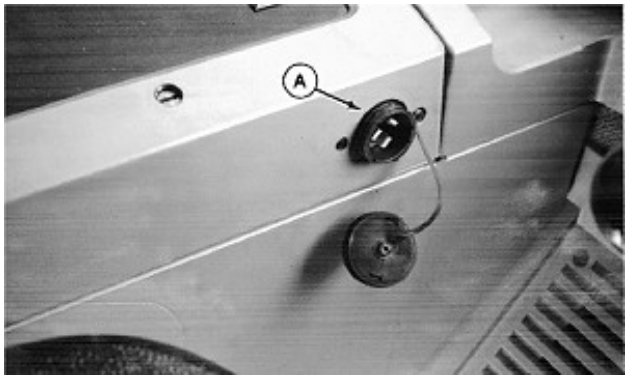

RW22076—UN—04DEC92
John Deere 7000 Series Tractor

A—Convenience Outlet

6. Connect the power plug on the monitor-controller wiring harness to the convenience outlet (A).
7. Route the harness through a grommet in the back of the cab, or drill a 44 mm (1-3/4 in) diameter hole in rear wall if necessary.

DP99999,0000DBB-19-15SEP17

Install BaleTrak™ Monitor-Controller in SOUND-GARD™ Cab

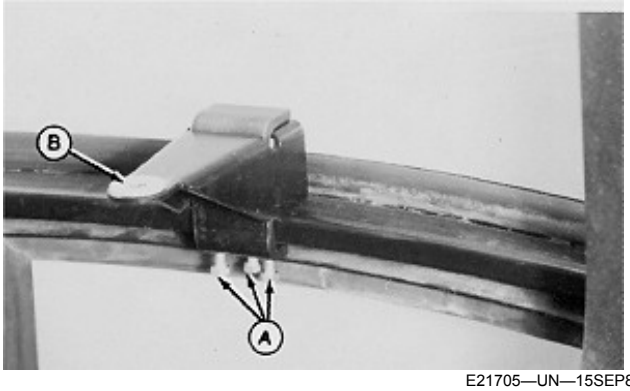

E21705—UN—15SEP88

A—Cap Screws, 5/16 x 1-3/4 in (3 used)
B—Bracket

1. Assemble the monitor-controller mounting bracket (B).
2. Attach the base of the bracket to the window ledge using cap screws (A).

E52435—UN—16JUN03

BaleTrak™ Pro Monitor-Controller

E84329—UN—06SEP17

BaleTrak™ Plus Monitor-Controller

A—Monitor-Controller

3. Attach the pivot bracket on the monitor-controller (A) to the mounting bracket using a M6 x 16 cap screw.
4. Route the monitor-controller wiring harness along the right-hand side of the cab, away from operating levers, and toward the rear of the cab.

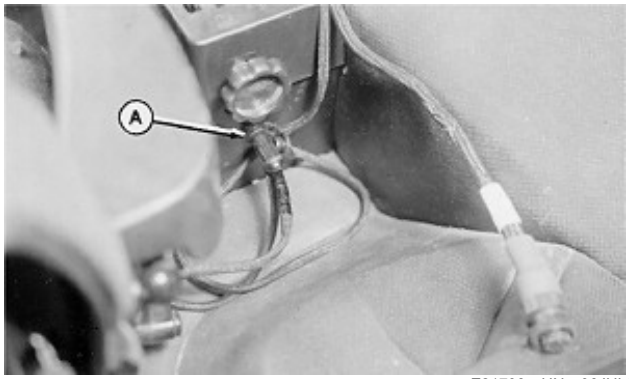

E21708—UN—06JUL89

A—Convenience Outlet

5. Connect the power plug on the wiring harness to the convenience outlet (A).
6. Route the harness through a grommet in the rear of the cab, or drill a 44 mm (1-3/4 in) diameter hole in the rear wall if necessary.

DP99999,0000DBC-19-15SEP17

Right-Hand Rear-View Mirror

E63789—UN—15JUN12

To assist in seeing bale shape indicator and bale size indicator while baling, install right-hand rear-view mirror. See your John Deere dealer.

PP98408,0000FEC-19-11FEB13

Extended Rear-View Mirror

E63790—UN—15JUN12

Install an extended rear-view mirror on tractor to improve visibility of traffic behind the baler when towing on public roads. See your John Deere dealer.

PP98408,0000FED-19-11FEB13

Select Twine

Good quality twine plays an important part in proper baler operation. Select twine which meets the ASABE standards for more trouble-free baling.

Select twine with good tensile strength and uniformity in size. These features help prevent twine from breaking while handling and transporting bales.

DP99999,0000D54-19-18MAY17

Tie Twine Balls

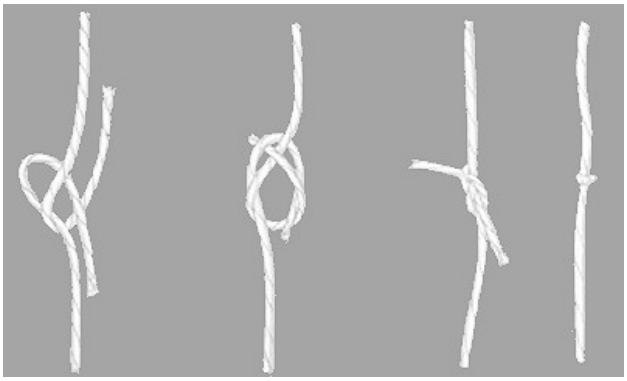

E26419—UN—12SEP00

Plastic Twine (Sheet Bend Knot)

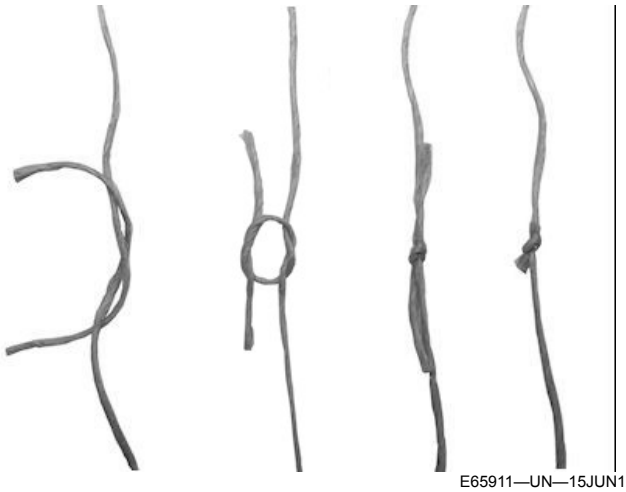

E65911—UN—15JUN12

Sisal Twine (Square Knot)

1. Pull twine from end of ball marked top.

IMPORTANT: Twine knot must be small enough to pass through guides and twine arm.

2. Join twine by tying outside twine end of one ball to center twine end of next ball.
   - Tie plastic twine balls together with a sheet bend knot.
   - Tie sisal twine balls together with a square knot.
3. Trim loose ends of twine as close to knot as possible.

PP98408,0000FEF-19-11FEB13

Route Twine from Right-Hand Twine Box (Rear Twine Arm)

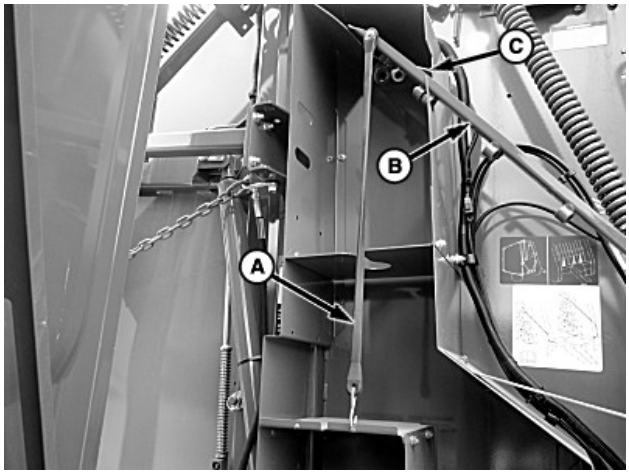

E83968—UN—31JUL17

A—Strap
B—Twine Guide Arm
C—Notch

1. Place twine ball into lower shelf.
2. Disconnect the rubber strap (A) from the lower shelf.
3. Remove the twine guide arm (B) from notch (C). Rotate the arm down to thread the twine.

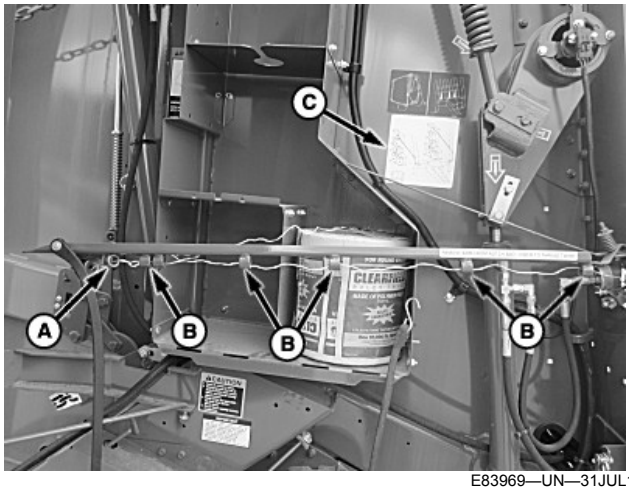

E83969—UN—31JUL17

Right-Hand Twine Box

A—Guide, Porcelain
B—Guide (6 used)
C—Label

4. Route the twine through porcelain guide (A) and guides (B).

   A twine threading label (C) is located near the twine box.

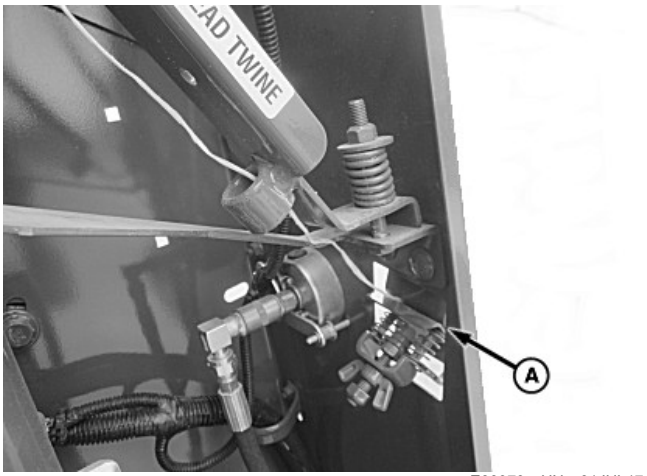

E83970—UN—31JUL17

A—Tension Plates

5. Insert the twine between the tension plates (A) on the front panel and pull it out through the front side.

E83971—UN—31JUL17

A—Twine Guide Arm
B—Twine Box Notch
C—Strap (2 used)

6. Rotate the twine arm (A) upward and into the twine box notch (B).
7. Move the twine ball from the lower shelf to the top shelf in the twine box.
8. Fill the empty shelves with twine.
9. Attach the retainer straps (C) as shown.

NOTE: Ensure that the proper knot is used according to the type of twine. (See Tie Twine Balls in this section.)

10. Connect the twine balls as follows:
    a. Tie the outside twine end from twine ball number 1 to the center twine end of ball number 2.
    b. Tie twine ball number 2 to twine ball number 3.
    c. Tie twine ball number 3 to twine ball number 4.

NOTE: Check that the twine moving indicator wheel (A) is free to spin without twine.

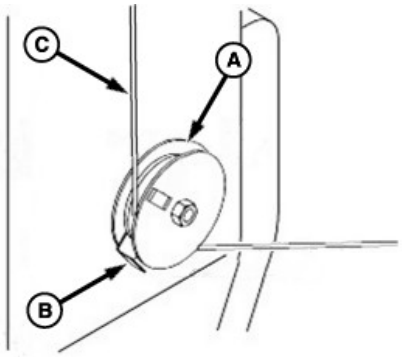

E85668—UN—27NOV17

A—Twine Moving Indicator Wheel
B—Twine Guide
C—Twine

11. When using plastic twine or small sisal twine, route the twine (C) through the twine guide (B) and a FULL turn around the twine moving indicator wheel (A). The twine must route behind the strand which comes down from the twine box.

NOTE: Wrapping large sisal twine a full turn around the indicator wheel can cause the twine to cling to itself and break, or cause excessive twine tension.

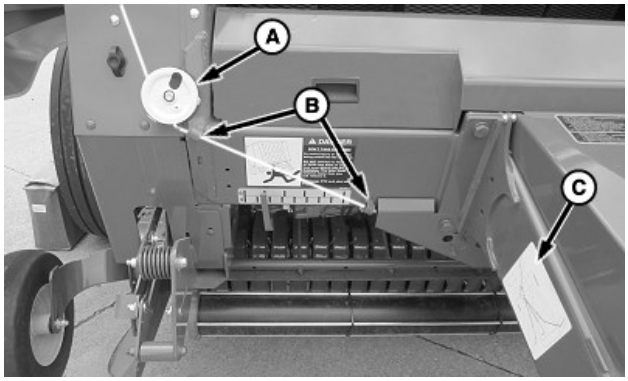

E83973—UN—31JUL17

A—Twine Moving Indicator Wheel
B—Twine Guides
C—Twine Threading Label

12. When using large sisal twine, route twine around the

twine moving indicator wheel (A) approximately one-quarter turn as shown.

13. Route the twine through guides (B).

    A twine threading label (C) is on the right-hand side of the tongue.

CAUTION: Avoid crushing, the twine arms can move unexpectedly. Keep hands out of the twine arm path. Turn off power BEFORE servicing or adjusting twine arms or twine cutter mechanism.

Stay out of the path of twine arms at all times when power to twine arms is ON.

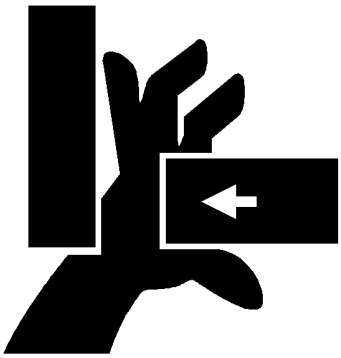

E47598—UN—07JAN00

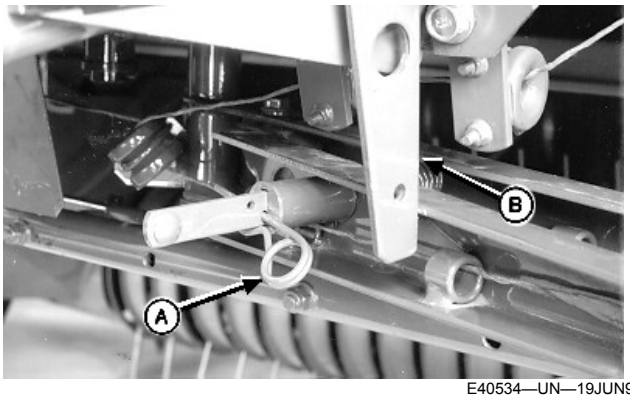

E40534—UN—19JUN96

A—Spring Pin
B—Twine Arm Stop

14. Hold the twine arm tubes together and remove spring pin (A). Release the twine arm tubes.
15. Lift twine arm stop (B) and move the front twine arm away from the rear twine arm.

NOTE: Twine spacing linkage removed for illustration purposes only.

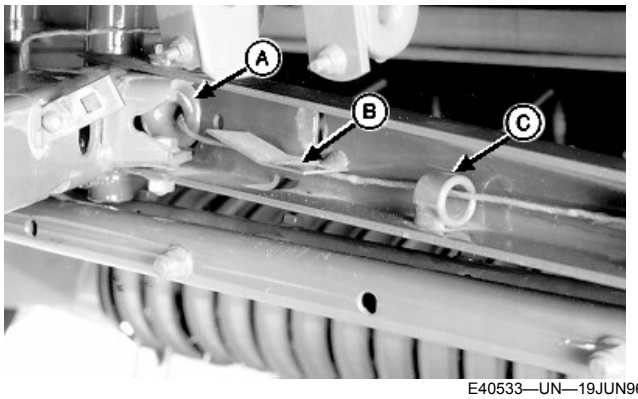

E40533—UN—19JUN96

A—Twine Guide
B—Twine Guide
C—Twine Guide

16. Route twine through guide (A), under guide (B), and through guide (C).

NOTE: Remove any crop buildup from tension plate area before threading twine.

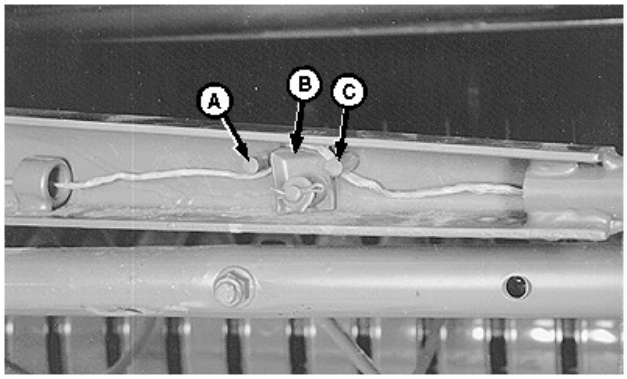

E40128—UN—21JUN96

A—Guide Pin
B—Tension Plate
C—Guide Pin

17. Route twine under guide pin (A), over the tension plate (B), and under guide pin (C). Pull on twine to get twine between the plates.

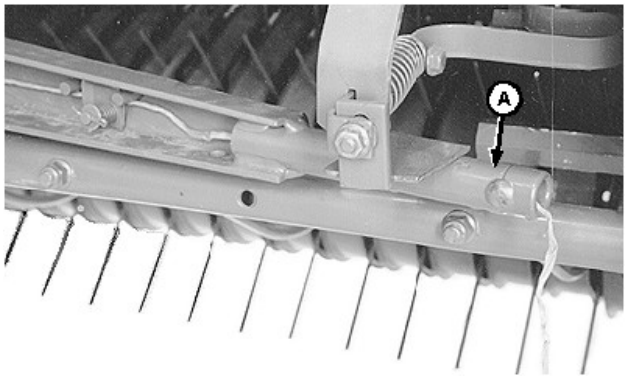

E40129—UN—21JUN96

A—Twine Tube

18. Pull the twine through twine tube (A). Pull on the twine to remove the slack between guides. Twine tension must meet specifications with the twine

perpendicular to the twine arm. To adjust twine tension, see Adjust Twine Tension in Operating the Baler section.

Specification

Twine Tension—Pull (Force). . . . . 22—45 N (5—10 lbf)

19. Cut the twine 305—381 mm (12—15 in) beyond the twine tube (A).
20. Install previously removed spring pin in one of the four positions for desired twine spacing. (See Set Twine Spacing in Operating the Baler section.)

DP99999,0000EA7-19-27NOV17

Route Twine from Left-Hand Twine Box (Front Twine Arm)

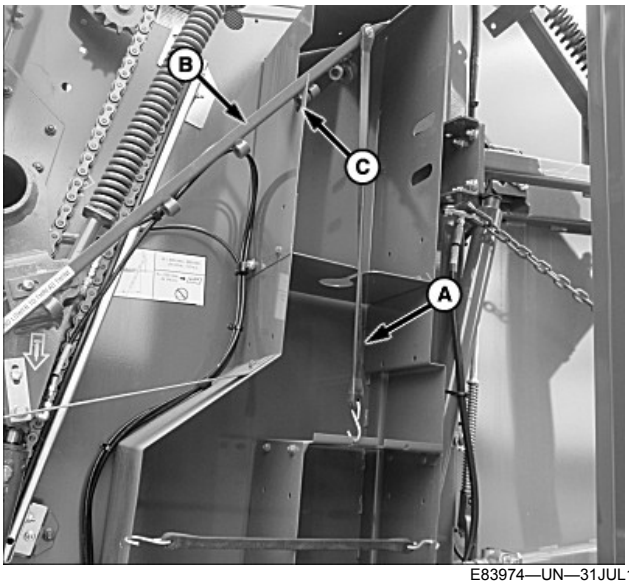

E83974—UN—31JUL17

A—Strap
B—Twine Guide Arm
C—Notch

1. Place twine ball into lower shelf.
2. Disconnect the rubber strap (A) from the lower shelf.
3. Remove the twine guide arm (B) from notch (C). Rotate the arm down to thread the twine.

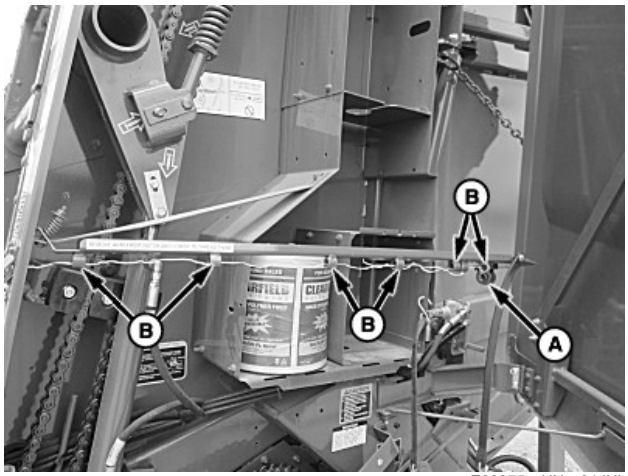

E83975—UN—31JUL17

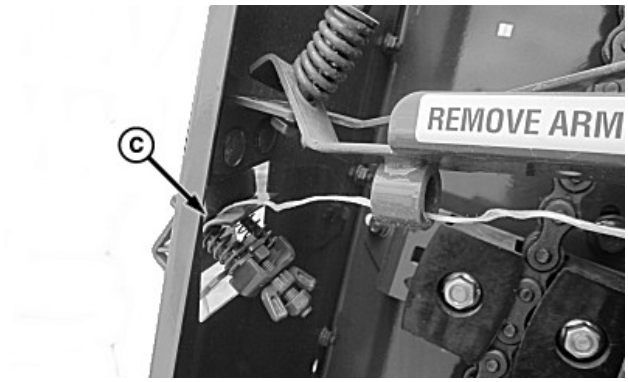

E85537—UN—07NOV17

A—Porcelain Guide
B—Guide (6 used)
C—Tension Plates

NOTE: A twine threading label is located by the twine box on the right-hand side of the baler.

4. Route the twine through porcelain guide (A) and guides (B) on the front twine arm.
5. Insert the twine between the tension plates (C) on the front panel and pull it out through the front side of the baler.

E83977—UN—31JUL17

A—Twine Guide Arm
B—Twine Box Notch
C—Strap (2 used)

6. Rotate the twine guide arm (A) upward and into the twine box notch (B).
7. Move the twine ball from the lower shelf to the top shelf in the twine box.
8. Fill the empty shelves with twine.
9. Attach the retainer straps (C) as shown.

NOTE: Ensure that the proper knot is used according to the type of twine. (See Tie Twine Balls in this section.)

10. Connect the twine balls as follows:
    a. Tie the outside twine end from twine ball number 1 to the center twine end of ball number 2.
    b. Tie twine ball number 2 to twine ball number 3.
    c. Tie twine ball number 3 to twine ball number 4.

NOTE: Check that the twine moving indicator wheel (A) is free to spin without twine.

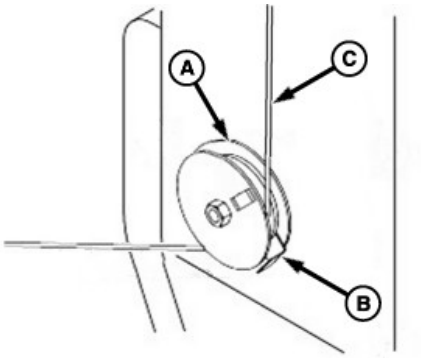

E85669—UN—27NOV17

A—Twine Moving Indicator Wheel
B—Twine Guide
C—Twine

11. When using plastic twine or small sisal twine, route the twine (C) through the twine guide (B) and a FULL turn around the twine moving indicator wheel (A). The twine must wrap behind the strand which comes down from the twine box.

NOTE: Wrapping large sisal twine a full turn around the indicator wheel can cause the twine to cling to itself and break, or cause excessive twine tension.

A twine threading label is on the right-hand side of the tongue.

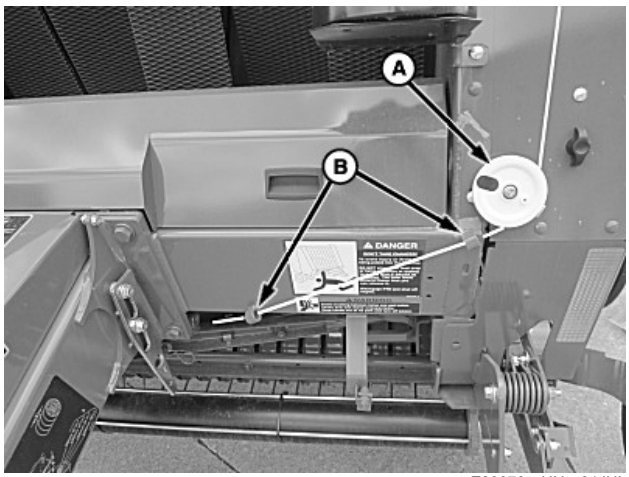

E83978—UN—31JUL17

A—Twine Moving Indicator Wheel
B—Twine Guides

12. When using large sisal twine, route the twine around the twine moving indicator wheel (A) approximately one-quarter turn as shown.
13. Route the twine through guides (B).

CAUTION: Twine arms can move unexpectedly. Avoid crushing, keep hands out of the twine arm path. Turn off power BEFORE servicing or adjusting twine arms or twine cutter mechanism.

Stay out of the path of twine arms at all times when power to twine arms is ON.

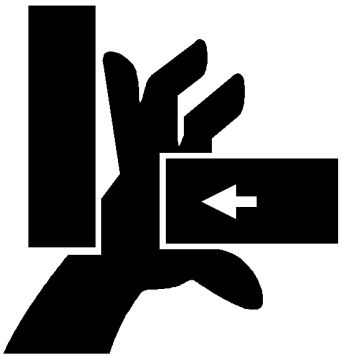

E47598—UN—07JAN00

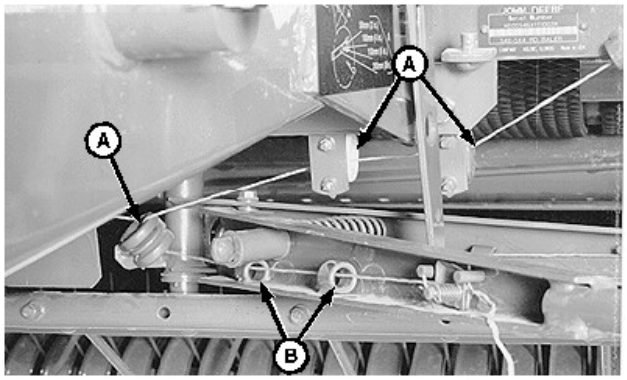

E40140—UN—21JUN96

A—Twine Guides
B—Twine Arm Guides

14. Route the twine through guides (A) and front twine arm guides (B).

NOTE: Remove any crop buildup from tension plate area before threading twine.

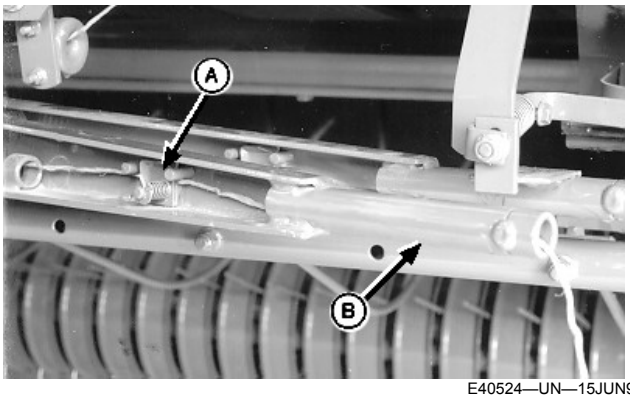

E40524—UN—15JUN96

A—Twine Tension Plate
B—Twine Tube

15. Route the twine over the tension plate (A) and under the guide pins. Pull on the twine to get twine between plates.
16. Pull the twine through twine tube (B). Pull on the twine to remove the slack between guides. Twine tension must meet specifications with the twine perpendicular to the twine arm. To adjust twine tension, see Adjust Twine Tension in Operating the Baler section.

Specification

Twine Tension—Pull (Force). . . . . 22—45 N (5—10 lbf)

17. Cut the twine 305—381 mm (12—15 in) beyond the twine tube (B).

DP99999,0000D0F-19-27NOV17

Convert Twine Ball Storage

Eight Twine Ball to Ten Twine Ball Storage

NOTE: Maximum twine ball height with the ten ball option is 210 mm (8.25 in).

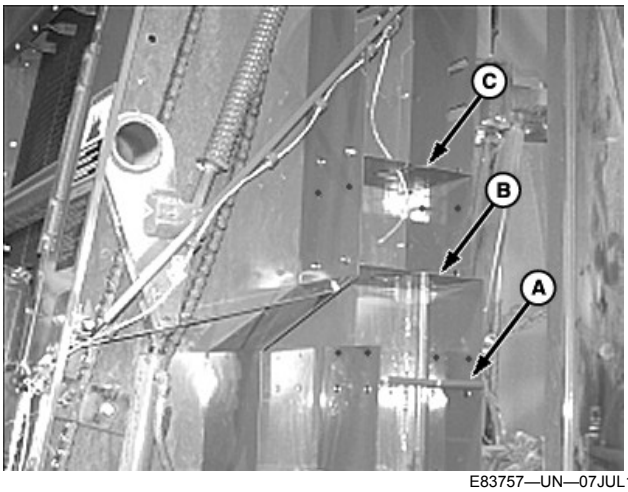

E83757—UN—07JUL17

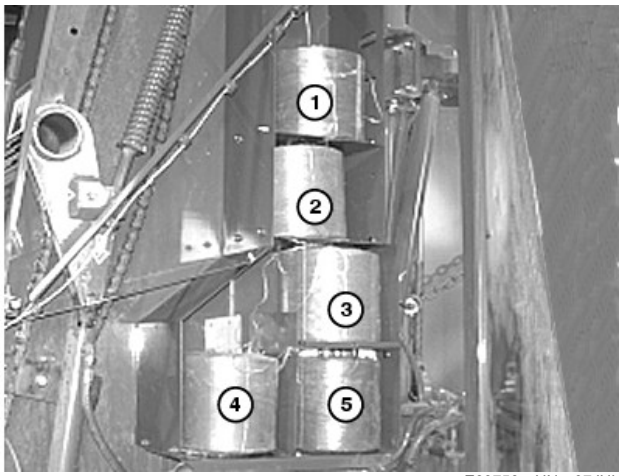

E83758—UN—07JUL17

A—Lower Shelf
B—Top Shelf
C—Additional Shelf

1. Cut the twine end, leaving twine threaded through the guides.
2. Remove the twine balls from the shelves.
3. Move the lower shelf (A) down to the position shown, with the mounting sides pointing down.
4. Move the top shelf (B) down to the center position shown, with the mounting sides pointing up.
5. Install an additional shelf (C) in the top position shown using four M8 x 16 round-head bolts and nuts. Install the shelf with the mounting sides pointing up.
6. Join the twine balls in sequence (1—5) as shown.
7. Repeat the procedure on the opposite side.

Ten Twine Ball to Eight Twine Ball Storage

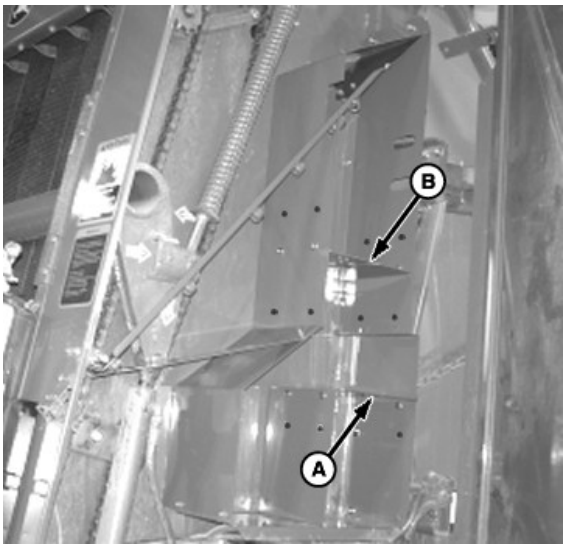

E54712—UN—27JUN06

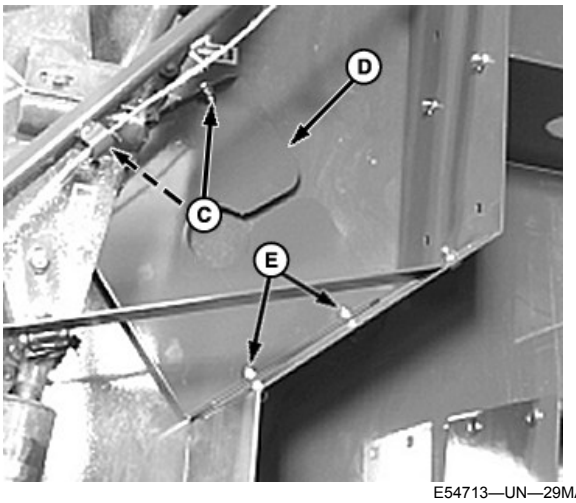

E54713—UN—29MAY07

A—Lower Shelf
B—Top Shelf
C—Round-Head Bolts and Nuts (2 used)
D—Shelf Storage Position
E—Round-Head Bolts and Nuts (2 used)

1. Cut the twine, leaving twine threaded through guides.
2. Move the lower shelf (A) up to the position shown, with the mounting sides pointing down.
3. Move the top shelf (B) down to the position shown, with the mounting sides pointing up.
4. Remove the center shelf. Place in one mounting side Install shelf in storage position (D) and fasten shelf in place with round-head bolts and nuts (C and E).
5. Repeat the procedure on the opposite side.

DP99999,0000DAD-19-07JUL17

Adjust Baler Hitch

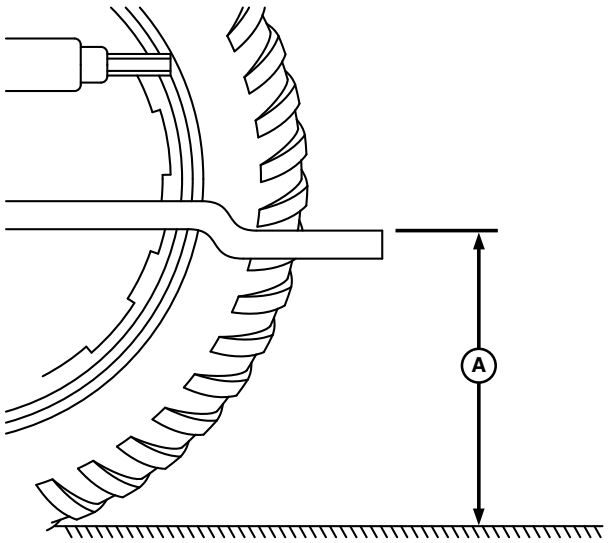

E62317—UN—04APR12

A—Dimension

1. Measure from the top of the tractor drawbar to the ground. Measure on level ground.

NOTE: All baler hitches are factory installed in position 3.

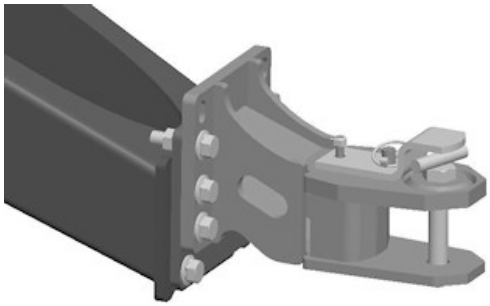

E60309—UN—13JUL11

Position 1

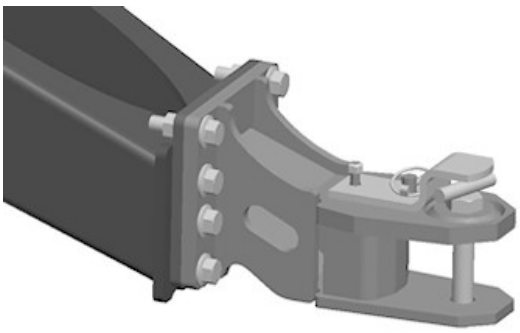

E60310—UN—13JUL11

Position 2

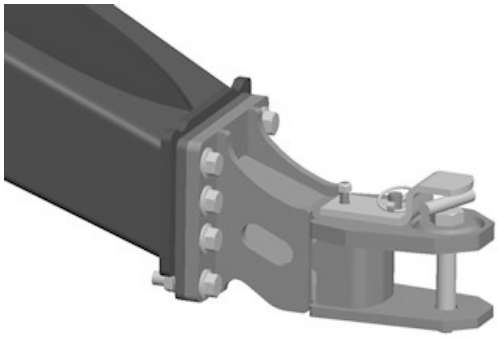

E60311—UN—13JUL11

Position 3 (Factory Setting)

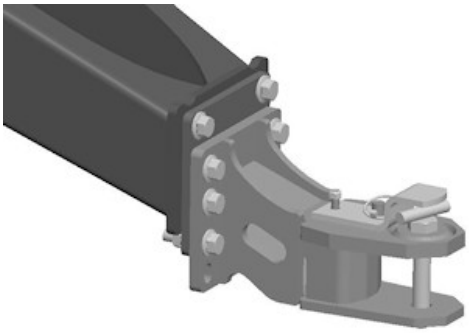

E60312—UN—13JUL11

Position 4

2. Adjust baler hitch according to the drawbar dimension.

MegaWide™ Plus Pickup	Drawbar Dimension (A)
Position 1	533—559 mm (21—22 in)
Position 2	483—508 mm (19—20 in)
Position 3	406—457 mm (16—18 in)
Position 4	330—381 mm (13—15 in)
Regular Pickup	**Drawbar Dimension (A)**
Position 1	432—559 mm (17—22 in)
Position 2	330—432 mm (13—17 in)
Position 3	Not Recommended
Position 4	Not Recommended
MegaWide™ HC2 Pickup	**Drawbar Dimension (A)**
Position 1	Not Recommended
Position 2	533—559 mm (21—22 in)
Position 3	432—533 mm (17—21 in)
Position 4	330—432 mm (13—17 in)

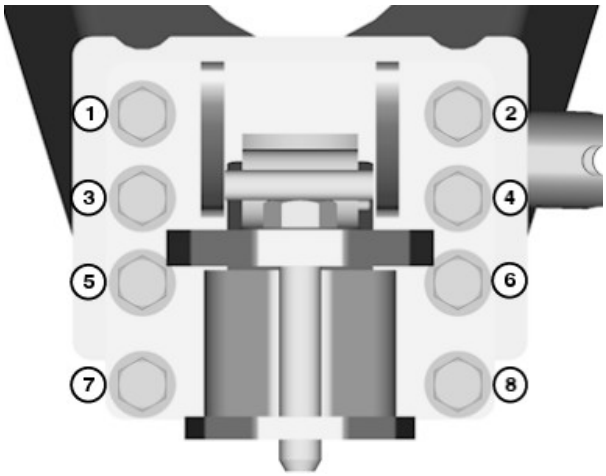

E83250—UN—24MAY17

3. Tighten hardware using sequence 1—8 as shown.
4. Tighten hardware to specification.

Specification	
Adjustable Hitch Hardware—Torque	350 N·m (258 lb·ft)

SF04007,0000EDD-19-16AUG17

Remove and Install Precutter Knives (If Equipped)

CAUTION: To avoid injury or death from a knife cut, always wear gloves when handling knives.

Precutter knives are sharp and can move without warning. To avoid serious injury, shut off all power and engage the lockout valve before servicing the knives or unclogging the baler.

IMPORTANT: To operate the BaleTrak™ Monitor-Controller, see the Operating the Baler section.

Knives can be removed to change cutting length or for sharpening. Remove and install knives as follows:

NOTE: To remove knives, raise and lower the drop floor with the knives engaged (raised). The raising and lowering action helps remove debris from the knife slots and frees the knives for easier removal.

1. Lower the drop floor and knives. (See Operate Drop Floor in the Operating the Baler section.)
2. Lower the knives. (See Operate Precutter Knives in the Operating the Baler section.)

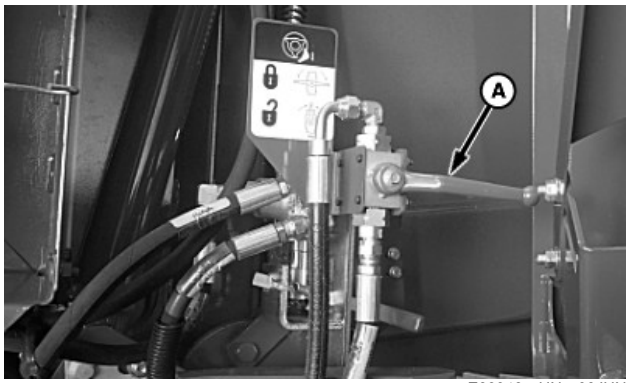

E83348—UN—06JUN17

A—Knife Cylinder Lockout Valve Lever

3. Open the left-hand side door and rotate the valve lever (A) to the locked position.

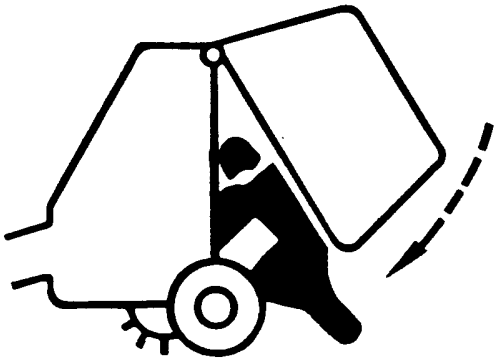

TS698—UN—21SEP89

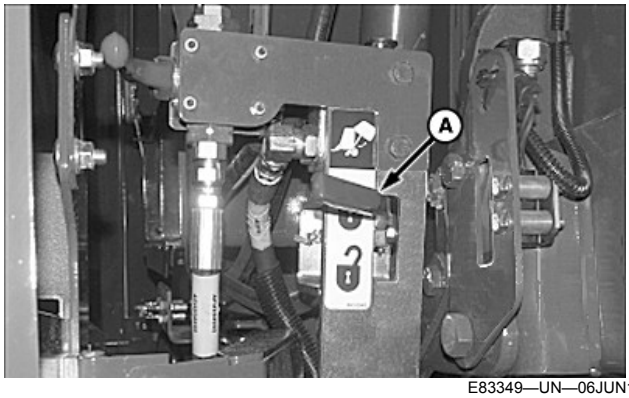

E83349—UN—06JUN17

A—Lever

CAUTION: While working inside or around the baler with an open gate, the gate lock lever (A) must be moved to the locked position. Use this safety feature any time the gate is open. Close the gate any time the baler must be left unattended.

4. Raise the gate and move the gate lock lever (A) into the locked position as shown.
5. Shut off the tractor engine and remove ignition key.

BaleTrak is a trademark of Deere & Company

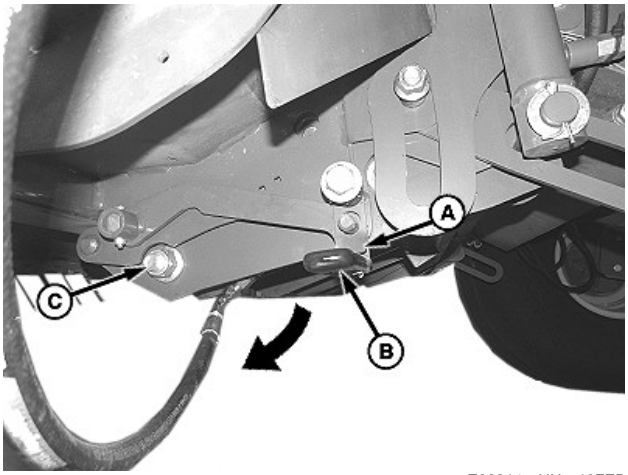

E82214—UN—13FEB17

A—Leaf Spring
B—Lever
C—Cap Screw

6. Remove and retain the retaining clip. Lift leaf spring (A) and pull down lever (B) until it contacts cap screw (C).

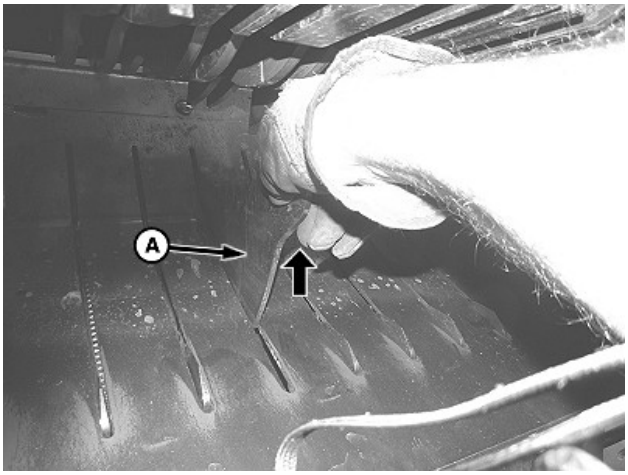

E82213—UN—13FEB17

A—Knife

7. Remove knives as follows:
   a. Grip the knife (A) at the rear as shown.
   b. Pull the knife upward in the direction of the arrow and then pull towards the rear of the baler.
   c. Repeat the preceding steps for the remaining knives.

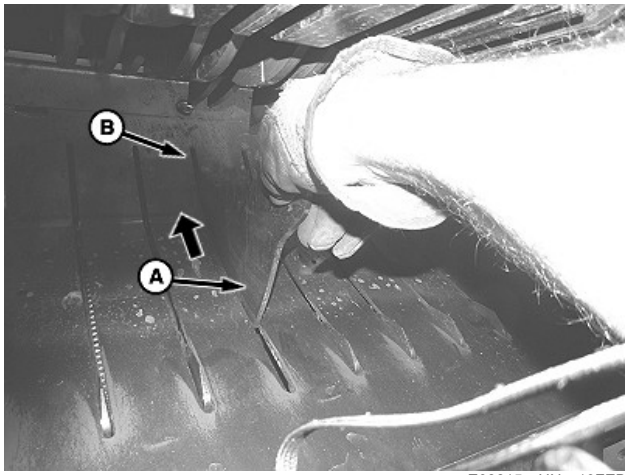

E82215—UN—13FEB17

A—Knife
B—Slot

8. Install knives as follows:
   a. Grip the knife (A) as shown.
   b. Insert the front of the knife into slot (B). Push the knife in the direction of the arrow to engage the front hole in the knife with the D-shaft.
   c. Lower the knife into the slot.
   d. Repeat the preceding steps for the remaining knives.

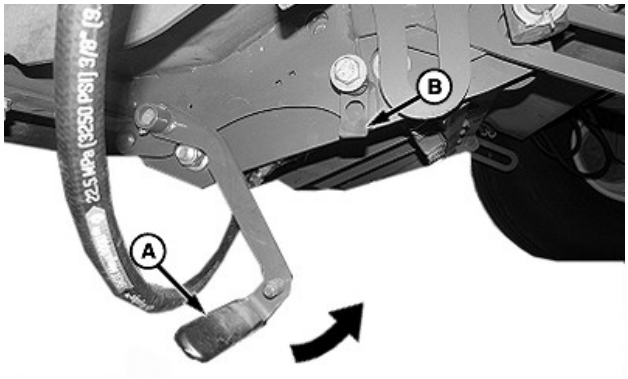

E84428—UN—06SEP17

A—Lever
B—Leaf Spring

9. Rotate lever (A) upwards and lock in place using leaf spring (B). Install previously removed retaining clip.
10. After locking the lever, verify that all of the knives are seated correctly in the floor. If any knives are not seated correctly, unlock the lever and ensure that the knives are all seated on the D-shaft.

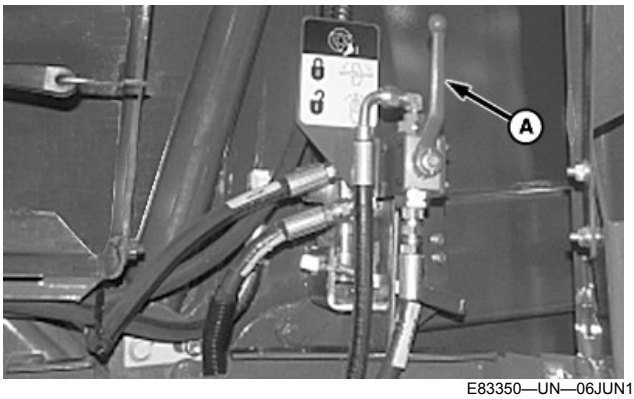

E83350—UN—06JUN17

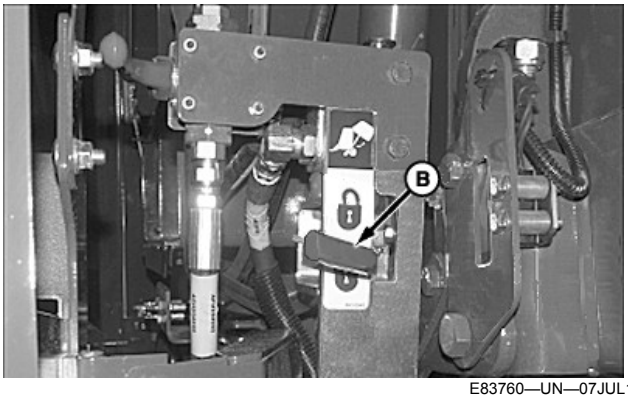

E83760—UN—07JUL17

A—Knife Cylinder Lockout Lever
B—Gate Lock Lever

11. Rotate the valve lever (A) to the unlocked position.
12. Move the gate lock lever (B) to the unlocked position and close the gate.

DP99999,0000D72-19-08NOV17

Install Knife Slot Filler Plates

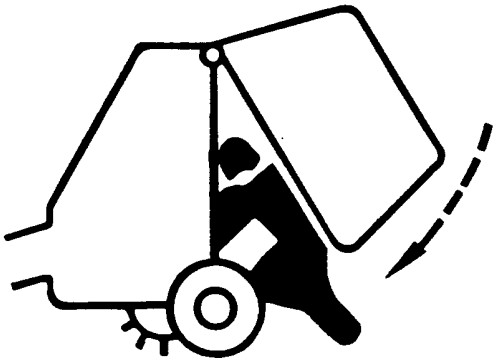

TS698—UN—21SEP89

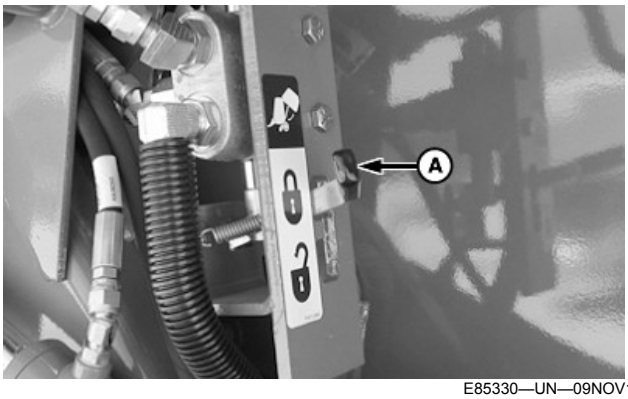

E85330—UN—09NOV17

Gate Lock Lever

A—Gate Lock Lever

CAUTION: While working inside or around the baler with an open gate, the gate lock lever (A) must be moved to the locked position. Use this safety feature any time the gate is open. Close the gate any time the baler must be left unattended.

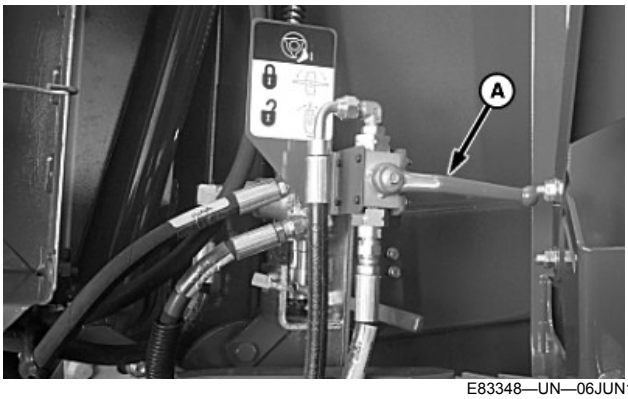

E83348—UN—06JUN17

Knife Cylinder Lockout Valve

A—Lockout Valve Lever

CAUTION: Precutter knives are extremely sharp and can move without warning. To avoid serious injury, shut off all power and engage the knife cylinder lockout valve lever (A) in the locked position before servicing the knives or unclogging the baler.

IMPORTANT: Position knives in the UP position during operation with knife slot filler plates.

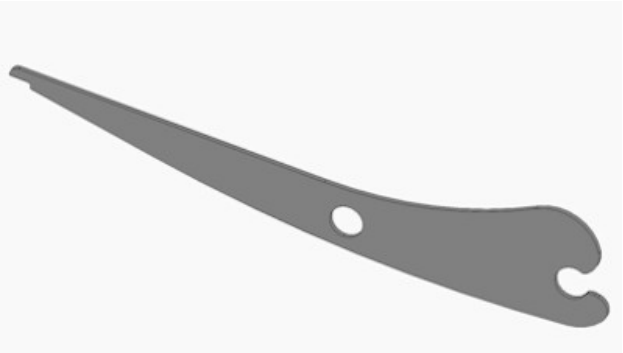

E73282—UN—19MAR14

Knife Slot Filler Plate

If the precutter is not being used for extended periods of time, install the filler plates.

Filler plates help keep the knife slots free of buildup and pinned crop which can reduce capacity when not using the precutter.

Install the filler plates in the same way as precutter knives (see Remove and Install Precutter Knives [if equipped] in this section).

Knife slot filler plates can be installed along with cutting knives to prevent buildup when using the precutter in a configuration for longer length of cut.

DP99999,0000D56-19-08NOV17

Wheel Spindle Positions—Regular Pickup with 14L x 16.1 Tires (560M Only)

NOTE: Wheel spindle position controls baler height and feeding capacity.

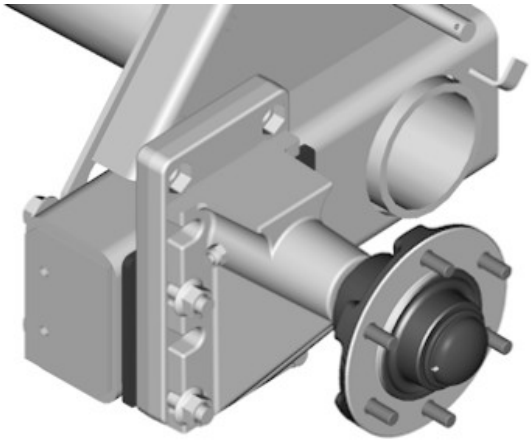

E85615—UN—22NOV17

Normal Position

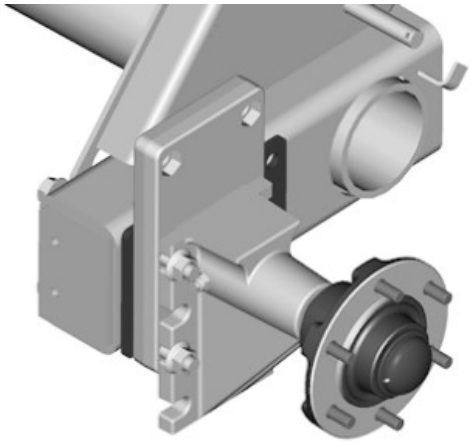

E85616—UN—22NOV17

Raised Position

Normal position is recommended for most baling conditions.

- Recommended with push bar.
- Pickup teeth do not touch the ground with pickup lowered, depending on tractor drawbar height.

Raised position is recommended for cornstalks, straw crops with tall stubble, or soft ground conditions. (See Bale Cornstalks in Operating the Baler section.)

- Recommended with push bar.
- Pickup teeth do not touch the ground with the pickup lowered.
- Tighten nuts to specification.

Specification	
Wheel Spindle Mounting Hardware—Torque	237 N·m (175 lb·ft)

- If the pickup will not lower or bounces excessively, adjust pickup float springs to provide less force (float). (See Adjust Pickup Float Springs in Service—Baler section.)
- Install Tires. (See Tire Installation And Wheel Nut Torque in this section.)

If the wheel spindle position must be changed, see Adjust Wheel Spindles in this section.

DP99999,0000D10-19-22NOV17

Wheel Spindle Positions—460M and 560M Balers with MegaWide™ Plus Pickup and 14L x 16.1 Tires

NOTE: Wheel spindle position controls baler height and feeding capacity.

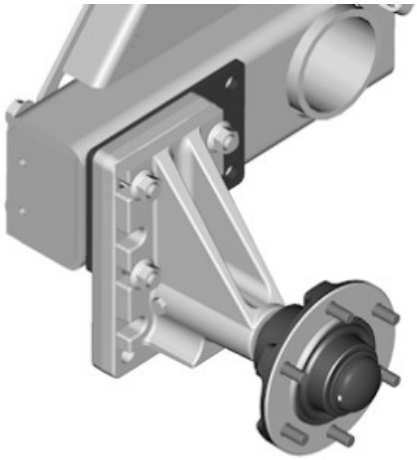

E85617—UN—22NOV17

Normal Position

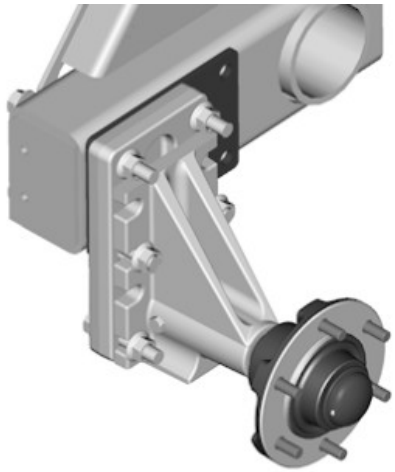

E85618—UN—22NOV17

Raised Position

Normal position is recommended for most baling conditions.

- Recommended for push bar.
- Pickup teeth do not touch the ground with pickup lowered depending on tractor drawbar height.

Raised position is recommended for straw crops with tall stubble and soft ground conditions.

- Recommended for push bar.
- Pickup teeth do not touch the ground with the pickup lowered.
- Tighten nuts to specification.

Specification	
Wheel Spindle Mounting Hardware—Torque	237 N·m (175 lb·ft)

- Install tires. (See Tire Installation and Wheel Nut Torque in this section.)

If wheel spindle position must be changed, see Adjust Wheel Spindles in this section.

DP99999,0000D11-19-27NOV17

Wheel Spindle Positions—460M and 560M Balers with MegaWide™ Plus Pickup and 21.5L x 16.1 Tires

IMPORTANT: No raised baler position is available with this spindle. Using spindle positions other than NORMAL position can lead to machine damage.

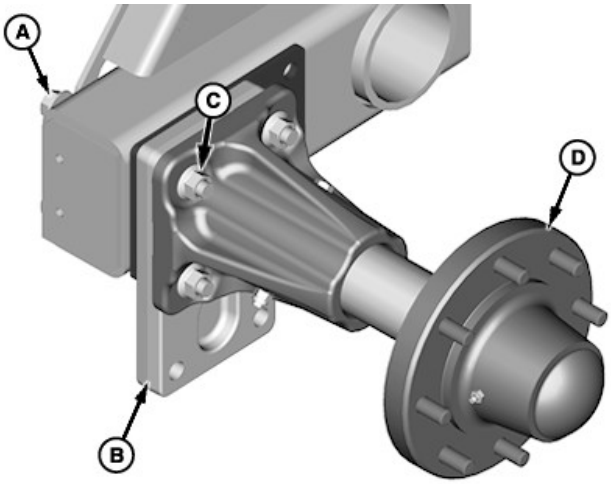

E66514—UN—17JUL12

Normal Position

A—Cap Screw, M16 x 180 (4 used)
B—Spacer Plate
C—Flange Nut, M16 (4 used)
D—Spindle

Normal position is recommended for all baling conditions.

- Recommended for push bar.
- Pickup teeth do not touch the ground with pickup lowered, depending on tractor drawbar height.

NOTE: Cap screw heads are to face inside of frame; nuts on outside of wheel spindle.

1. Install cap screws (A), spacer plate (B), flange nuts (C), and spindle (D).
2. Tighten nuts to specification.

Specification	
Wheel Spindle Mounting Hardware—Torque	350 N·m (255 lb·ft)

3. Repeat on the opposite side.

DP99999,0000D12-19-27OCT17

Wheel Spindle Positions—460M and 560M Balers with MegaWide™ HC2 Pickup and 21.5L x 16.1 Tires

IMPORTANT: No raised baler position is available with this spindle.

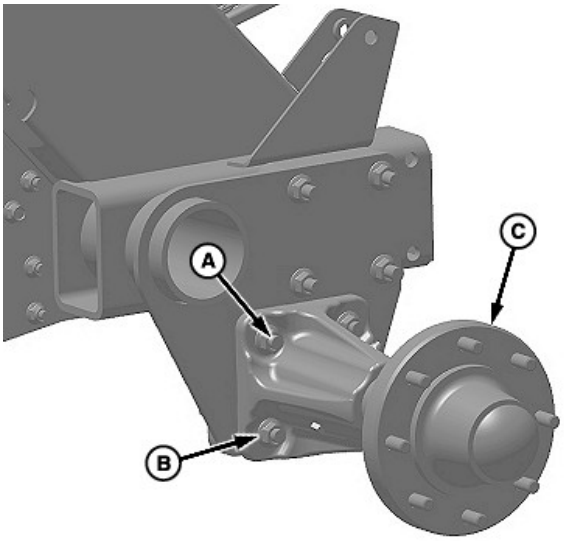

E82755—UN—18JUL17

Wheel Spindle Mounting

A—Cap Screw, M16 x 180 (4 used)
B—Flange Nut, M16 (4 used)
C—Spindle

When the baler hitch is properly adjusted, the pickup teeth do not touch the ground when the pickup is lowered. The baler hitch must be set according to the tractor drawbar height. (See Adjust Baler Hitch in this section.)

NOTE: Install cap screws with heads facing the inside of the frame and nuts on the outside of the wheel spindle.

If wheel spindles are replaced:

1. Install cap screws (A), flange nuts (B), and spindle (C).
2. Tighten flange nuts to specification.

Specification

Flange Nuts—Torque. . . . . 350 N·m (255 lb·ft)

3. Repeat on the opposite side.

DP99999,0000D97-19-27OCT17

Tire Installation and Wheel Nut Torque

Machines with 11L-14 Tires:

IMPORTANT: Install wheels with the valve stems toward the inside. Incorrect assembly can cause wheel nuts to loosen.

Exceeding recommended tire pressure can damage baler frame.

Whenever a wheel has been removed and installed, check wheel nut torque after 1 hour of operation and repeat until nuts maintain specified torque.

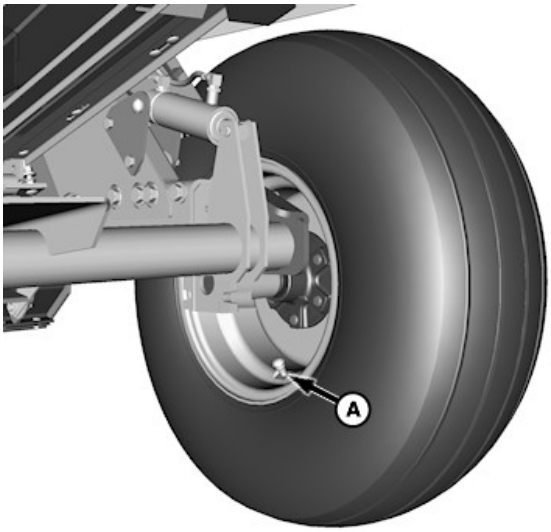

E65913—UN—18JUN12

11L-14 Tires Shown

A—Valve Stem

1. Install wheel with the valve stem (A) toward the inside. Fasten with six 1/2 in nuts.
2. Whenever a wheel has been removed and installed, check wheel nut torque after 1 hour of operation and repeat until nuts maintain specified torque. Wheel nuts must be tightened to specifications.

Specification

Wheel Nuts—Torque. . . . . 115 N·m (85 lb·ft)

3. Verify tire inflation pressure.

Tires	kPa (bar) (psi)
11L-14, 8 PR[a]	207 (2.1) (30)

[a]*When making consistently heavy bales or operating with the CoverEdge net wrap, 11L x 14 tires can be inflated up to 248 kPa (2.5 bar) (36 psi).*

4. Repeat procedure on the opposite side.

Machines with 14L-16.1 Tires:

IMPORTANT: Install wheels with the valve stems toward the outside. Incorrect assembly can cause wheel nuts to loosen.

Exceeding recommended tire pressure can damage baler frame.

Whenever a wheel has been removed and installed, check wheel nut torque after 1 hour of operation and repeat until nuts maintain specified torque.

E63107—UN—13APR12

14L x 16.1 Tires Shown

A—Valve Stem

1. Install wheel with the valve stem (A) toward the outside. Fasten with six 1/2 in nuts.
2. Whenever a wheel has been removed and installed, check wheel nut torque after 1 hour of operation and repeat until nuts maintain specified torque. Wheel nuts must be tightened to specifications.

Specification

Wheel Nuts—Torque. . . . . 115 N·m (85 lb·ft)

3. Verify tire inflation pressure.

Tires	kPa (bar) (psi)
14L x 16.1, 8 PR	207 (2.1) (30)

4. Repeat procedure on the opposite side.

Machines with 21.5L-16.1 Tires, MegaWide™ Plus, and MegaWide™ HC2 Pickups:

IMPORTANT: Install wheels with the valve stems toward the outside. Incorrect assembly can cause wheel nuts to loosen.

Exceeding recommended tire pressure can damage baler frame.

Whenever a wheel has been removed and installed, check wheel nut torque after 1 hour of operation and repeat until nuts maintain specified torque.

E65244—UN—22MAY12

21.5L x 16.1 Tires Shown

A—Valve Stem

1. Install wheel with the valve stem (A) toward the outside. Fasten with eight 5/8 in nuts.
2. Whenever a wheel has been removed and installed, check wheel nut torque after 1 hour of operation and repeat until nuts maintain specified torque. Wheel nuts must be tightened to specifications.

Specification

Wheel Nuts—Torque. . . . . 237 N·m (175 lb·ft)

3. Adjust tire inflation pressure.

Tires	kPa (bar) (psi)
21.5L x 16.1, 10 PR	103 (1.0) (15)

4. Repeat procedure on the opposite side.

SF04007,0000EDF-19-10MAY17

Adjust Wheel Spindles with 14L x 16.1 Tires

Wheel spindle positions are determined by tire size, pickup type, and crop conditions. (See WHEEL SPINDLE POSITIONS in this section.)

IMPORTANT: When raising the baler with jack or hoist, place a jackstand or equivalent support under baler frame. Avoid placing jackstand under MegaWide™ Plus pickup frame.

1. Park baler on level surface.

MegaWide is a trademark of Deere & Company

2. Using a jack or hoist, raise one side of baler. Place jackstand or equivalent support under baler frame.
3. Remove wheel.
4. Remove nuts, washers, and spindle.
5. Reposition wheel spindle and reinstall hardware. Tighten nuts to specifications.

Specification

Wheel Spindle Mounting Hardware—Torque. . . . . 237 N·m (175 lb.-ft.)

6. Install wheel. (See TIRE INSTALLATION and WHEEL NUT TORQUE in this section.)
7. Repeat procedure on opposite side.

PP98408,0000FF8-19-11FEB13

Tire Inflation Pressures

Tires	kPa (bar) (psi)
14L x 16.1, 8 PR	207 (2.1) (30)
21.5L x 16.1, 10 PR	103 (1.0) (15)

PP98408,0000FF9-19-11FEB13

Select Net Wrap Material

In order to achieve optimum performance, use only John Deere approved high-quality net wrap material. Approved material is identified by a green strip near each end of the roll. (See your John Deere dealer.)

460M:

- CoverEdge™ wrap is available in roll lengths of 3688 m (12 100 ft)
- Alternatively, CoverEdge™ wrap is available in lighter weight roll lengths of 2999 m (9840 ft)
- Edge to Edge wrap is available in roll lengths of 4023 m (13 200 ft)
- B-Wrap material is available in a roll length containing 45 segments. Each segment contains approximately three wraps of CoverEdge™ net and one wrap of Tama SCM™ breathable material.

560M:

- CoverEdge™ wrap is available in roll lengths of 2743 m (9000 ft)
- Alternatively, CoverEdge™ wrap is available in lighter weight roll lengths of 2133 m (7000 ft)
- Edge to Edge wrap is available in roll lengths of 2956 m (9700 ft)
- B-Wrap material is available in a roll length containing 35 segments. Each segment contains approximately three wraps of CoverEdge™ net and one wrap of Tama SCM™ breathable material.

If using Edge to Edge net wrap material, it requires spacer plugs in end of roll and adjustments made to the net wrap attachment. (See ADJUST NET WRAP STRETCH in Service—Net Wrap section.)

Approximate Width of Net Wrap Rolls		
	460M	560M
Edge to Edge net wrap	122 cm (48 in)	163 cm (64 in)
CoverEdge™ net wrap	129 cm (51 in)	170 cm (67 in)
B-Wrap net wrap	129 cm (51 in)	170 cm (67 in)

DP99999,0000D13-19-29JUN17

Care of Net Wrap Material

Store net wrap material and B-Wrap material flat. Do not stand on end.

Protect wrap material from moisture and damage.

Store the material in a cool, dry place away from direct sunlight. Store the material off the ground (for example on a wooden pallet) to prevent deformation of the cardboard tube and net.

Be careful in handling net wrap material. It can be damaged by rolling around loose in the back of a pickup truck or being dragged along the ground.

Snags can cause erratic performance and affect bale appearance and durability.

Do not remove the protective covering until ready for use.

Help minimize damage to a roll of material from improper transport. Carry an extra roll in the storage location provided at the rear of the baler.

NOTE: Damage can occur to wrap material when moving a bale to storage. DO NOT push a bale on the ground when picking it up or moving it to storage.

DP99999,0000E27-19-18SEP17

Open and Close Net Wrap Cover

CAUTION: Be sure that PTO is disengaged, tractor engine is off, and monitor-controller power plug is disconnected from the tractor convenience outlet before opening cover.

Cover is spring loaded and moves up quickly when released.

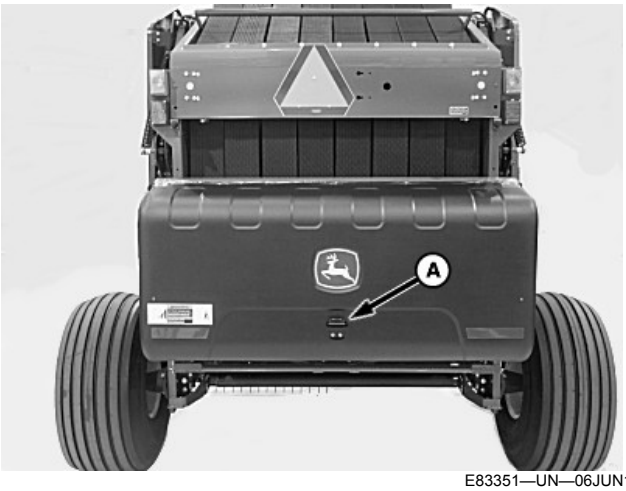

E83351—UN—06JUN17

A—Latch Handle

1. To open the net wrap cover, pull on latch handle (A) and lift the cover up.
2. To close, pull the cover down and push it shut.

DP99999,0000D73-19-29JUN17

CoverEdge is a trademark of Deere & Company

Release Net Wrap Brake

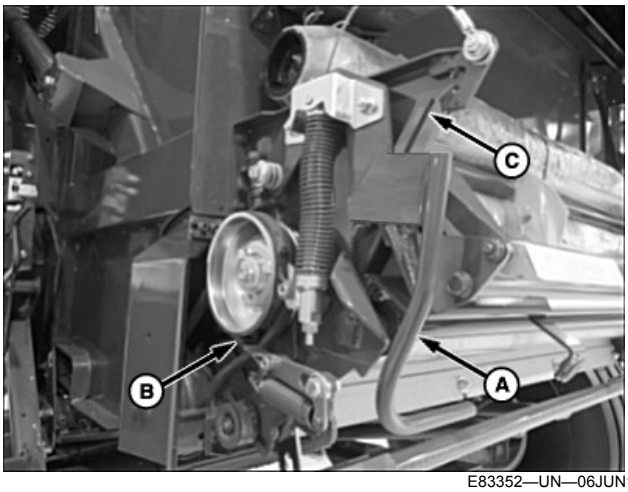

E83352—UN—06JUN17

A—Lever
B—Brake Band
C—Latch Tab

1. Disengage PTO, shut off the tractor engine, and disconnect the monitor-controller power plug from the tractor convenience outlet.
2. Open the net wrap cover.
3. Move lever (A) outward and upward to release the brake band (B) from the net wrap feed roll pulley. Raise the lever until it rests on the top of the latch tab (C).

GW44282,000075B-19-06JUN17

Load Net Wrap Material

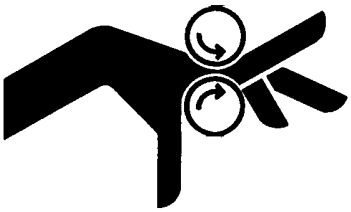

E40200—UN—08JUL96

CAUTION: Avoid injury from entanglement in moving rolls. Disengage the PTO, shut off the tractor engine, and disconnect monitor-controller power plug from the tractor convenience outlet before servicing.

NOTE: Use the recommended approved net wrap material available from your John Deere dealer.

Edge-to-edge net wrap material is available, but requires spacer plugs in the ends of the roll and adjustments to the attachment. (See Adjust Net Wrap Stretch in the Service—Net Wrap section.)

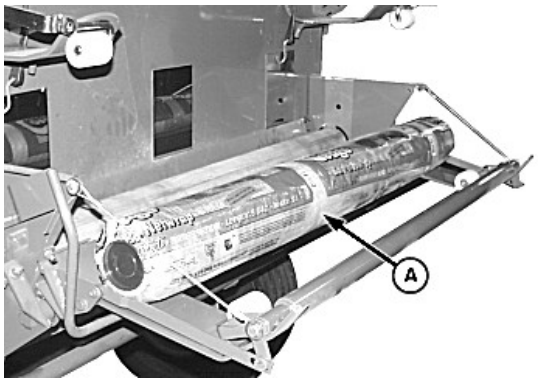

E51064—UN—08JAN02

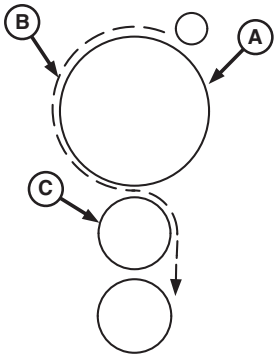

E83247—UN—23MAY17

Net Wrap Routing Diagram

A—Net Wrap Roll
B—Net Wrap Material
C—Rubber Feed Roller

1. Open the net wrap cover.

NOTE: Remove all packaging material from the net wrap roll before installing.

The net wrap roll must be installed with the two large stripes on the right-hand side of the machine.

2. Swing the lower tension arm out and place the net wrap roll (A) at the loading position.
3. Place the free end of the net wrap material (B) from the top of the roll between the net frame cross-member and the rubber feed roller (C). Ensure that the material wraps over the rear of the feed roller.
4. Lift the lower tension arm, placing the roll of net in the operating position.

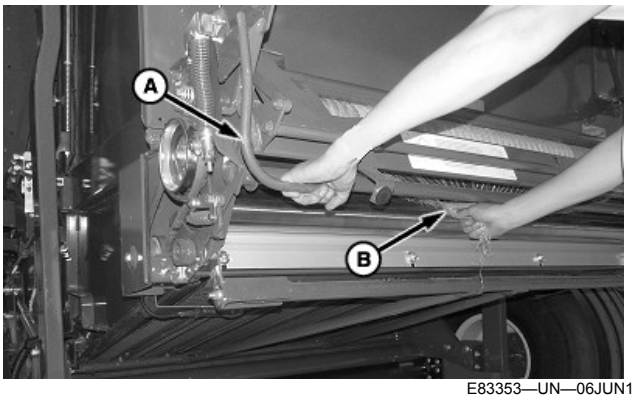

E83353—UN—06JUN17

Net Wrap Feed Roller Brake Release Lever

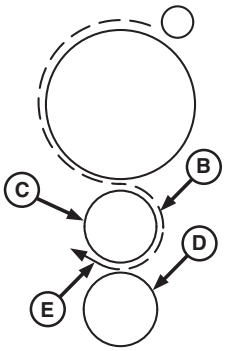

E83248—UN—23MAY17

Net Wrap Routing Diagram

A—Lever
B—Net Wrap
C—Rubber Feed Roller
D—Steel Roller
E—Net Wrap Extension

5. Pull lever (A) outward and upward to disengage the net wrap feed roller brake.
6. Thread the net wrap material between the feed rollers as follows:
   a. Gather the loose ends of the net wrap (B). Twist the material and make a loop.
   b. Thread the loop of material between the rubber feed roller (C) and the steel roller (D).

   IMPORTANT: Do not extend the net wrap material more than 25 mm (1 in) beyond the rollers. Additional material can wrap around the rollers.

   c. Engage and disengage the brake lever (A) three or four times, as necessary, to advance the material through the feed rollers. Ensure that the net wrap material extension (E) is not more than 13—25 mm (0.5—1.0 in) beyond the rollers.

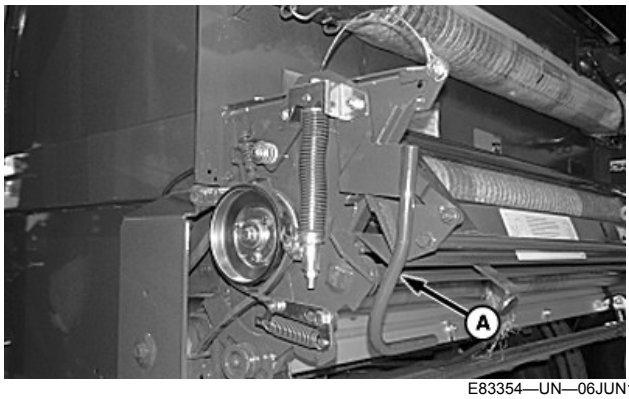

E83354—UN—06JUN17

A—Lever

7. Pull lever (A) outward and push it downward to engage the brake.

IMPORTANT: Avoid knife contact with the rubber roll. Any knife cuts in the rubber roll covering can result in more frequent wrapping of net material around the rolls and can require roll replacement.

8. Cut off any excess material.
9. Close the net wrap cover.
10. To avoid net wrapping on the rubber roller, release the net wrap feed roller brake and reset the brake before using the baler at the beginning of each day.
11. Adjust net wrap feed roll brake tension. (See Check and Adjust Net Wrap Feed Roll Brake in the Service —Net wrap section.)

DP99999,0000D58-19-11AUG17

Load B-Wrap Material

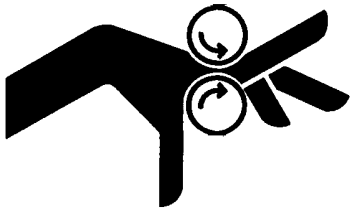

E40200—UN—08JUL96

CAUTION: Avoid injury from entanglement in moving rolls. Disengage the PTO, shut off the tractor engine, and disconnect monitor-controller power plug from the tractor convenience outlet before servicing.

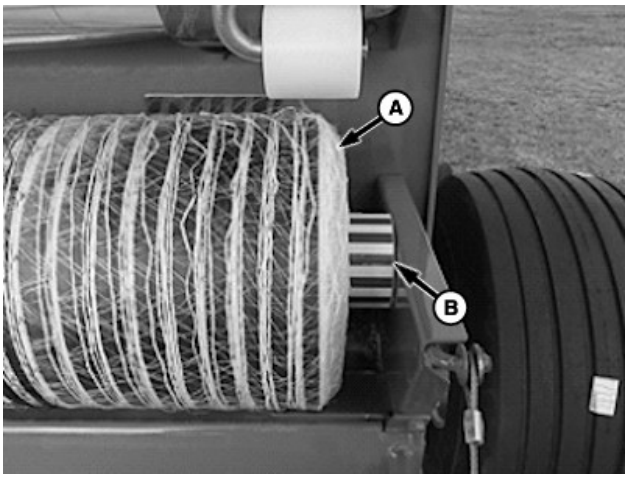

E69417—UN—13FEB13

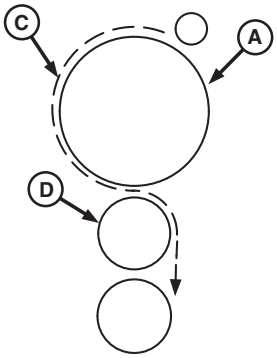

E83249—UN—23MAY17

B-Wrap Routing Diagram

A—B-Wrap Roll
B—Striped End
C—B-Wrap Material
D—Rubber Feed Roller

1. Open the net wrap cover.

NOTE: Remove all packaging material from the B-wrap roll before installing.

The B-wrap roll must be installed with the striped end on the right-hand side of the machine. The metal strip within the material must be on the left-hand side.

2. Swing the lower tension arm out and place the B-wrap roll (A) at the loading position. Ensure that the striped end (B) of the roll is on the right-hand side of the machine.
3. Place the free end of the net wrap material (C) from the top of the roll between the net frame cross-member and the rubber feed roller (D). Ensure that the material wraps over the rear of the feed roller.
4. Lift the lower tension arm, placing the roll of net in the operating position.

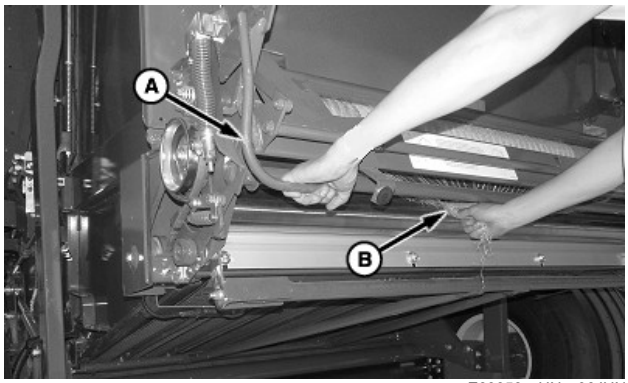

E83353—UN—06JUN17

B-Wrap Feed Roller Brake Release Lever

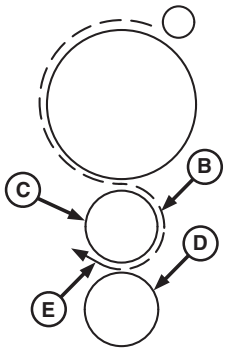

E83248—UN—23MAY17

B-Wrap Routing Diagram

A—Lever
B—B-Wrap
C—Rubber Feed Roller
D—Steel Roller
E—B-Wrap Extension

5. Pull lever (A) outward and upward to disengage the net wrap feed roller brake.
6. Thread the B-wrap material between the feed rollers as follows:
   a. Gather the loose ends of the B-wrap (B). Twist the material and make a loop.
   b. Thread the loop of material between the rubber feed roller (C) and the steel roller (D).

   IMPORTANT: Do not extend the B-wrap material more than 25 mm (1 in) beyond the rollers. Additional material can wrap around the rollers.

   c. Engage and disengage the brake lever (A) three or four times, as necessary, to advance the material through the feed rollers. Ensure that the B-wrap material extension (E) is not more than 13—25 mm (0.5—1.0 in) beyond the rollers.

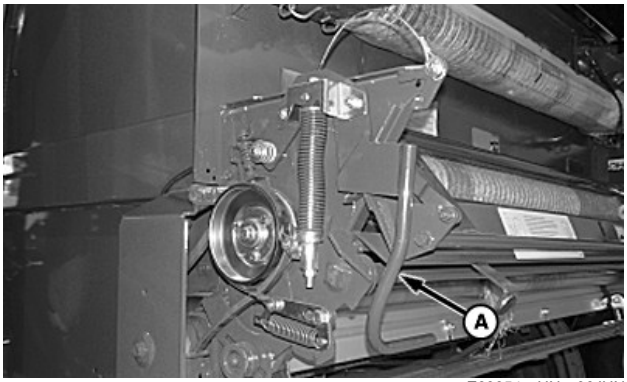

E83354—UN—06JUN17

A—Lever

7. Pull lever (A) outward and push it downward to engage the brake.

IMPORTANT: Avoid knife contact with rubber roll. Any knife cuts in the rubber roll covering can result in more frequent wrapping of net material around the rolls and can require roll replacement.

8. Cut off any excess material.
9. Close the net wrap cover.
10. To avoid net wrapping on the rubber roller, release the net wrap feed roller brake and reset the brake before using the baler at the beginning of each day.
11. Adjust net wrap feed roll brake tension. (See Check and Adjust Net Wrap Feed Roll Brake in the Service —Net wrap section.)

DP99999,0000D5A-19-11AUG17

Wrap Material Storage

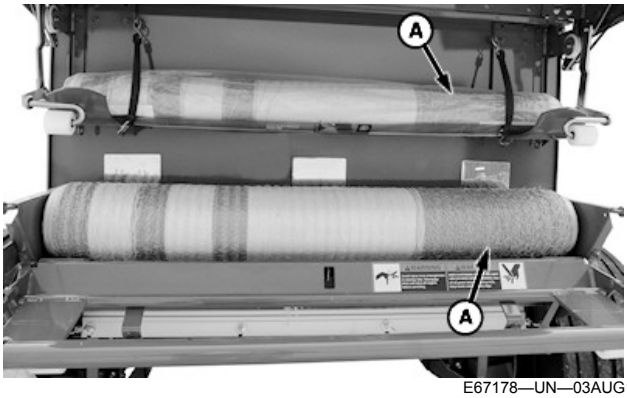

E67178—UN—03AUG12

A—Wide Green Stripe

1. Load the roll with the wide green stripe (A) for the net wrap material or the striped end of the roll for B-Wrap material on the right-hand side. If the roll is oriented properly in the storage location, then it is ready to be lowered into the operating position.

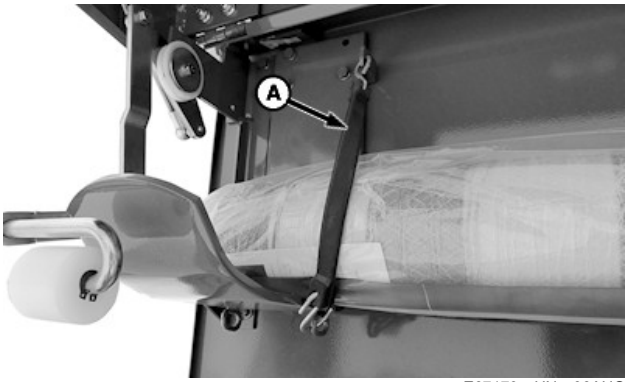

E67179—UN—06AUG12

A—Rubber Strap (as needed)

2. To secure the roll, stretch rubber straps (A) and hook them to the support brackets on the right and left-hand sides.

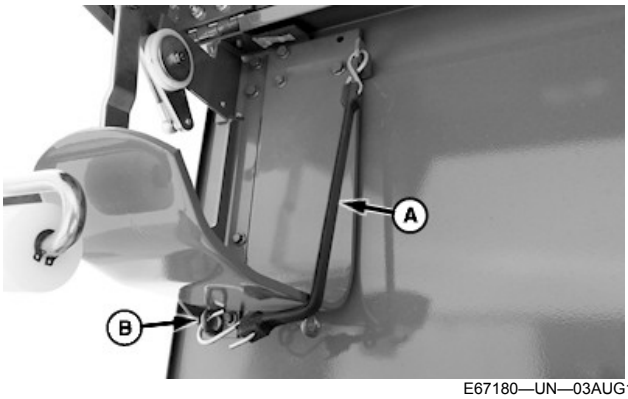

E67180—UN—03AUG12

A—Rubber Strap (as needed)
B—Support Bracket (1 each side)

3. When the storage location is empty, make sure that the rubber straps (A) are secured to the support brackets (B) and not left to hang free.

E67181—UN—03AUG12

A—S-hook (Hanging Free)

4. If a rubber strap is allowed to hang free, the S-hook (A) can snag the net and ruin several hundred feet of material on the working roll.

DP99999,0000D98-19-27OCT17

Assemble PTO Driveline (If Necessary)

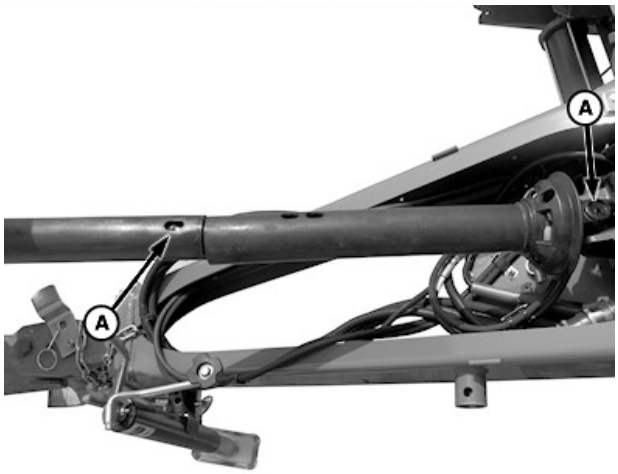

E62346—UN—05APR12

A—Lubrication Fittings

1. Make sure to align lubrication fittings (A) when assembling PTO driveline.
2. Wipe dirt and excess grease from shaft and sleeve to avoid contamination and wear. Assemble telescoping members together.
3. Apply multipurpose grease to lubrication fitting on sleeve before operating. (See Lubrication and Maintenance section.)

DP99999,0000D6C-19-01JUN17

Attach Baler to Tractor Drawbar

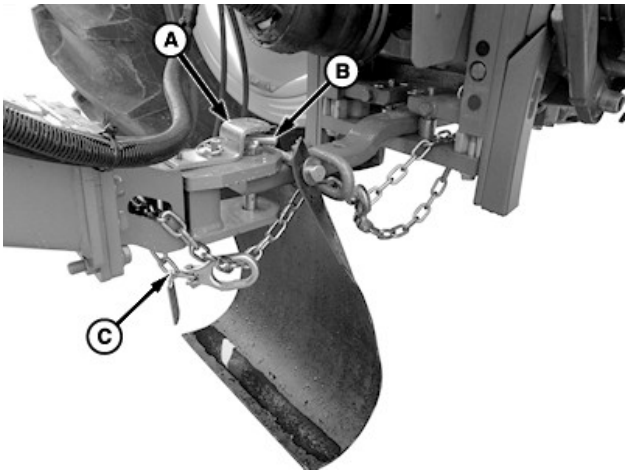

E61064—UN—30MAR12

A—Bracket
B—Hitch Pin
C—Safety Chain

1. Remove the quick-lock pin, then raise and rotate bracket (A) 90°. Remove hitch pin (B).
2. Back up the tractor to the baler. Align the tractor drawbar with the front of the baler tongue.
3. Engage the tractor parking brake and place the transmission in Park.
4. Shut off the tractor engine and remove the ignition key.
5. Install the hitch pin. Raise and rotate bracket (A) over the hitch pin. Install the quick-lock pin.
6. Route safety chain (C) through the loop on the drawbar (if equipped) and connect to tractor drawbar supporting structure, as shown. Do not fasten the chain to the drawbar. Remove all slack except for what is needed for turns.
7. Connect the PTO driveline. (See Connect PTO Driveline in this section.)

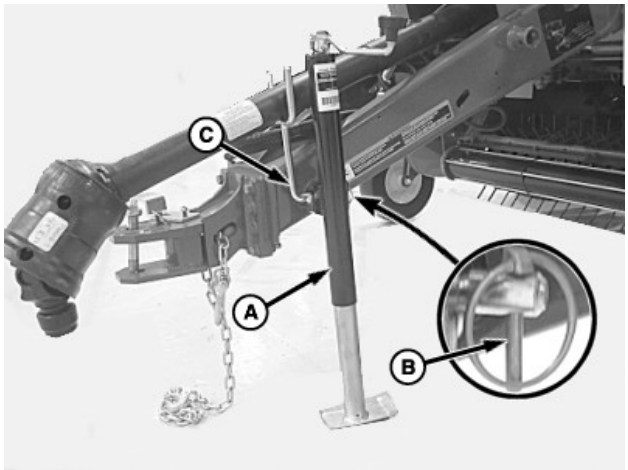

E83223—UN—31MAY17

A—Jackstand
B—Quick-Lock Pin
C—PTO Support Rod

8. Turn the handle to take the load off the jackstand (A).
9. Remove the quick-lock pin (B) and the PTO support rod (C) retaining the jackstand to the baler tongue.

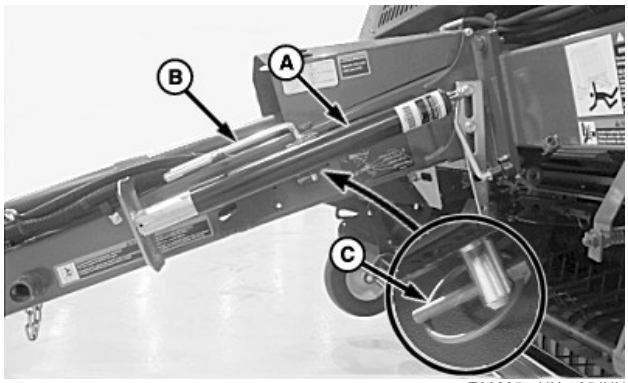

E83225—UN—05JUN17

Jackstand (Storage Position)

A—Jackstand
B—PTO Support Rod
C—Quick-Lock Pin

IMPORTANT: Store jackstand (A) with the handle toward the baler to prevent water from entering the jack gearset.

10. Install jackstand (A) in the storage position with the handle facing toward the baler. Install the PTO support rod (B) with the forked end toward the front of the tongue. Install quick-lock pin (C).

DP99999,0000D5F-19-10OCT17

Install Drawbar Shield

IMPORTANT: Drawbar shield is required to keep crop flowing underneath tractor and baler hitch area.

E65201—UN—21MAY12

A—Pin
B—Washers
C—Retaining Ring

1. Install pin (A), washers (B), and retaining ring (C).
2. Slide drawbar shield onto drawbar.
3. Drawbar shield can be installed with baler attached to tractor drawbar by removing pin (A) and reassembling in front of the hitch.

DP99999,0000D6D-19-01JUN17

Connect PTO Driveline

TS198—UN—23AUG88

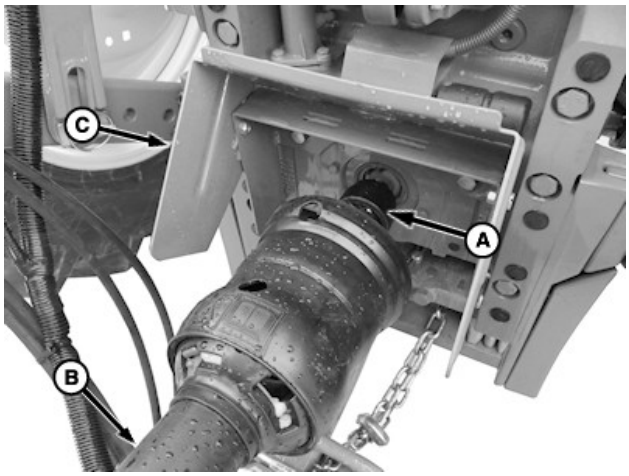

E62263—UN—30MAR12

A—Collar
B—Shield
C—PTO Shield

CAUTION: Shut off tractor engine before attaching PTO driveline. Entanglement in the rotating driveline can cause serious injury or death.

IMPORTANT: Keep driveline and power shaft splines clean of paint, dirt, and chaff. Apply John Deere Moly High Temperature EP Grease or John Deere EP Moly Grease on the tractor PTO shaft before connecting PTO driveline.

1. Shut off the tractor engine and remove ignition key.
2. Raise the tractor PTO shield (C), if equipped.
3. Pull back on collar (A). The collar clicks and holds in the ready position.
4. Align the splines by rotating the baler driveline. Push the driveline onto the tractor PTO shaft until collar (A) snaps forward.
5. To check if the driveline is latched, pull back on shield (B). Do not pull on collar (A). Pulling on the collar releases the latch. Lower the PTO shield.

DP99999,0000D6A-19-26JUN17

Connect Baler Hydraulic Hoses to Tractor

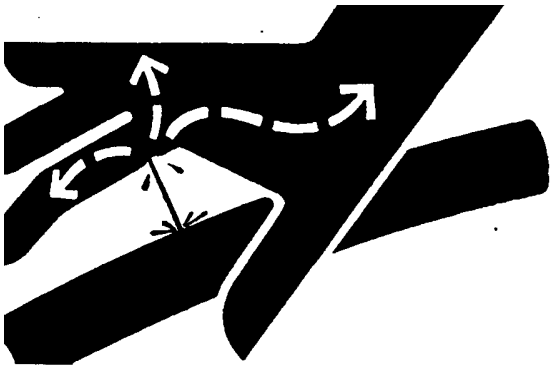

X9811—UN—23AUG88

CAUTION: Escaping fluid under pressure can penetrate the skin causing serious injury. Avoid the hazard by relieving pressure before disconnecting hydraulic or other lines. Tighten all connections before applying pressure. Search for leaks with a piece of cardboard. Protect hands and body from high-pressure fluids.

If an accident occurs, see a doctor immediately. Any fluid injected into the skin must be surgically removed within a few hours or gangrene can result. Doctors unfamiliar with this type of injury must reference a knowledgeable medical source. Such information is available from Deere & Company Medical Department in Moline, Illinois, U.S.A.

Hydraulic hoses can fail due to physical damage, kinks, age, and exposure. Check hoses regularly. Replace damaged hoses.

IMPORTANT: All hydraulic couplers must be clear of debris, dust, and sand. Use protective caps on fluid openings until ready to make connection. Foreign material can damage the hydraulic system.

NOTE: If the baler is equipped with a hydraulic pickup lift or the MegaWide™ HC2 feed system, the tractor must have two sets of selective control valves (SCV's).

To help identify and properly connect hoses, hose identification kits are available from your John Deere dealer or qualified service provider.

Tractor remote cylinder receptacles are labeled I through IV. Receptacles are identified from top to bottom.

ISO hydraulic couplers are standard with the baler. If they do not fit the tractor, see your John Deere dealer or qualified service provider.

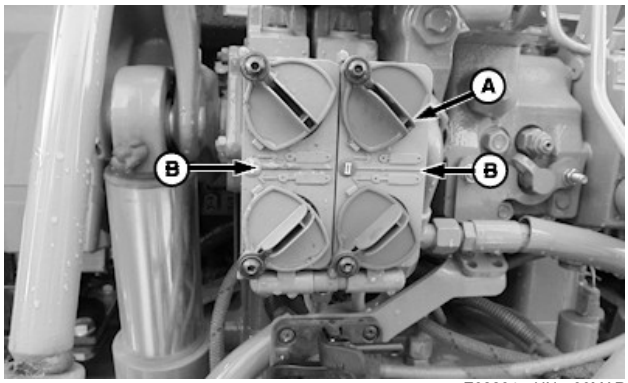

E62264—UN—30MAR12

A—Dust Covers
B—Cylinder Symbols

1. Clean off dust covers (A) and hose ends.
2. Check to be sure symbols (B) on the receptacle identification plate, indicating cylinder movement, match cylinder travel direction.

CAUTION: On tractors with a transport lock for the selective control valves (SCV's), such as John Deere 7000 Series tractors, push the SCV lever lockout into the transport lock position before attaching the baler to prevent component movement and personal injury.

3. Insert the gate cylinder hydraulic hose couplers into tractor receptacles (SCV I). Push the hose couplers firmly into the receptacles. To operate the gate:
   a. Move the tractor selective control valve lever rearward to open the gate.
   b. Move the selective control valve lever forward to close the gate.
4. If equipped with the optional hydraulic pickup lift or the MegaWide™ HC2 feed system, insert the hydraulic hose couplers into the next set of tractor receptacles (SCV II). Push couplers firmly into the receptacles. To operate the pickup lift:
   a. Move the selective control valve lever rearward to raise the pickup. When the precutter knives or the drop floor is enabled (HC2 feed system only), they also raise.
   b. Move the selective control valve lever forward to lower the pickup. When precutter knives or the drop floor is enabled (HC2 feed system only), they also lower.

DP99999,0000D9E-19-26OCT17

MegaWide is a trademark of Deere & Company

Tractor Convenience Outlet

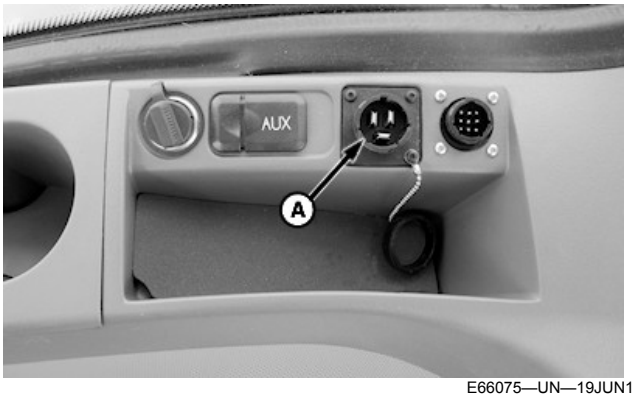

E66075—UN—19JUN12

A—Convenience Outlet

Convenience outlet (A) is used to power the BaleTrak™ Pro and BaleTrak™ Plus monitor-controllers.

NOTE: Outlet is protected by a 30 A fuse. The key switch must be in the ON or ACCESSORY position when using the outlet.

SF04007,0000EE2-19-25MAY17

Connect Baler Wire Harness to Tractor (BaleTrak™ Pro or Plus System)

E52435—UN—16JUN03

BaleTrak™ Pro Monitor-Controller

E84329—UN—06SEP17

BaleTrak™ Plus Monitor-Controller

A—BaleTrak™ Pro or Plus Monitor-Controller

1. Route the baler wire harness into the tractor cab or operator's station.
2. Connect the baler wire harness to the BaleTrak™ Pro or BaleTrak™ Plus monitor-controller (A) wiring harness connectors. Line up the timing mark on the connectors and tighten the locking ring.
3. Ensure that the power plug on the monitor-controller wiring harness is connected to the tractor convenience outlet.

DP99999,0000E24-19-15SEP17

Connect Tail and Warning Light Harness

NOTE: If towing tractor is not equipped with an electrical outlet, field installation of Seven-Terminal Auxiliary Electric Kit is required. Kit can be ordered through your John Deere dealer.

Make sure that baler tail and warning lights operate with tractor tail and warning lights and turn signals.

E62265—UN—30MAR12

Tractor Seven-Terminal Outlet

BaleTrak is a trademark of Deere & Company

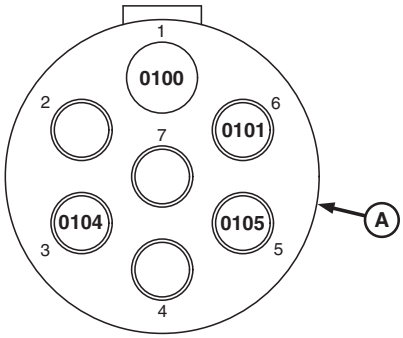

E84488—UN—12SEP17

Baler Tail and Warning Light Plug

A—Tail and Warning Light Plug

Connect tail and warning light harness plug (A) to the seven-terminal outlet on the tractor. Check tail light and warning light function. (See Light Enhancement Module Operation in Transporting section.)

Terminal	Circuit	Function	Wire Color
1	0100	Ground	Black
2		Open	
3	0104	Left-Hand Turn or Warning Light	Yellow
4		Open	
5	0105	Right-Hand Turn or Warning Light	Green
6	0101	Tail Lights	Brown
7		Open	

DP99999,0000D6E-19-10OCT17

Detach Baler from Tractor

CAUTION: To prevent personal injury caused by unexpected movement:

- **Park the tractor and baler on a level surface**
- **Engage tractor parking brake and place transmission in Park**
- **Disengage PTO**
- **Shut off tractor engine and remove ignition key**

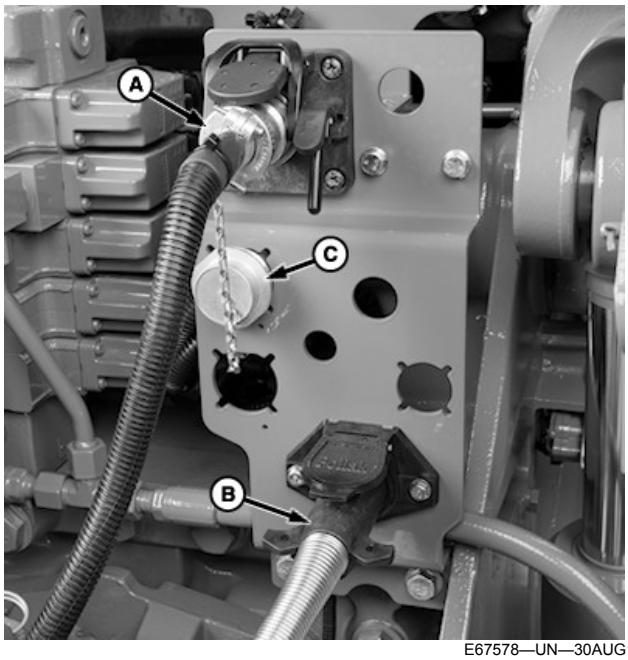

E67578—UN—30AUG12

A—ISO Harness
B—Tail and Warning Light Plug
C—Cap

1. Park baler on a level surface, or block both baler wheels so baler cannot roll after detaching from the tractor.
2. Engage tractor parking brake and place transmission in Park.
3. Shut off tractor engine and remove ignition key.
4. Disconnect ISO harness (A) and the tail and warning light plug (B).
5. Install cap (C) on the ISO harness.
6. Store the wiring harnesses in the baler tongue.

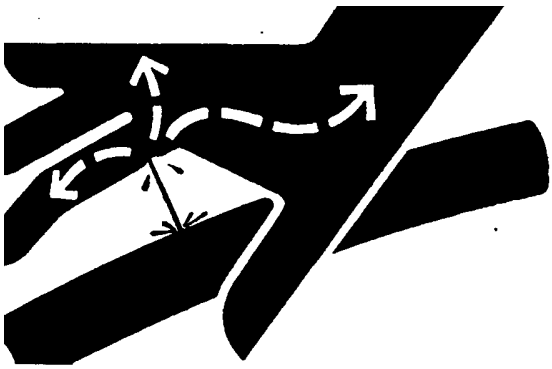

X9811—UN—23AUG88

CAUTION: Escaping fluid under pressure can penetrate the skin causing serious injury. Avoid the hazard by relieving pressure before disconnecting hydraulic or other lines. Tighten all connections before applying pressure. Search for leaks with a piece of cardboard. Protect hands and body from high-pressure fluids.

If an accident occurs, see a doctor immediately. Any fluid injected into the skin must be surgically removed within a few hours or gangrene can result. Doctors unfamiliar with this type of injury must reference a knowledgeable medical source. Such information is available from Deere & Company Medical Department in Moline, Illinois, U.S.A.

On tractors equipped with an SCV lever lockout, push the lockout into the transport lock position before detaching the baler to prevent component movement and personal injury.

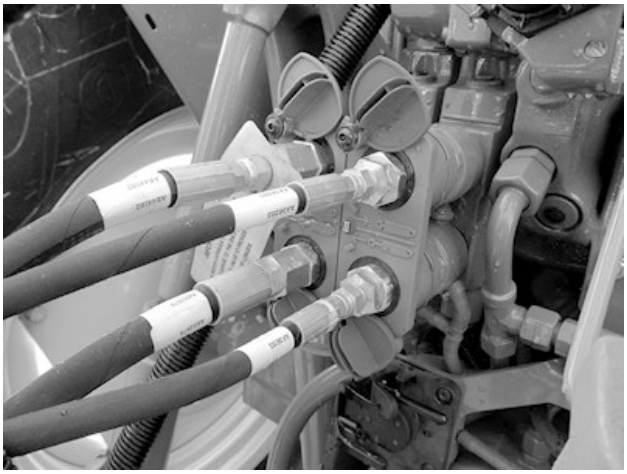

E62266—UN—30MAR12

7. Disconnect hydraulic hose couplers from the tractor receptacles. Install dust covers on the couplers. Place the hose couplers and wire harness connectors in the slots in the baler PTO shield to keep them clean and prevent damage. Store the hoses in the baler tongue.

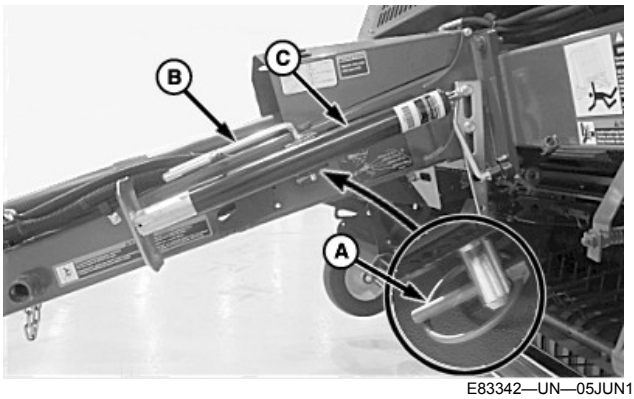

E83342—UN—05JUN17

Jackstand (Storage Position)

A—Quick-Lock Pin
B—PTO Support Rod
C—Jackstand

8. Remove quick-lock pin (A) and PTO support rod (B) retaining jackstand (C) in storage location. Remove the jackstand.

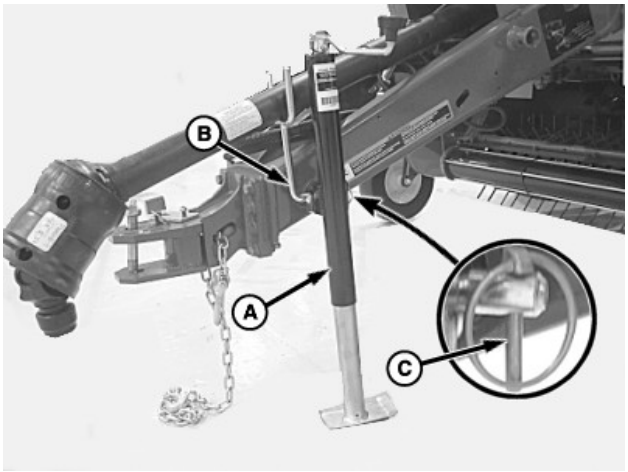

E83343—UN—02JUN17

Jackstand (Tongue Support Position)

A—Jackstand
B—PTO Support Rod
C—Quick-Lock Pin

9. Install the jackstand (A) on the tongue support post. Insert the PTO support rod (B) through the jackstand and post with the support facing the front of the tongue. Install quick-lock pin (C).
10. Turn the handle clockwise to take the tongue load off the tractor drawbar. After disconnecting PTO from tractor, place driveline in the PTO support rod.

TS198—UN—23AUG88

CAUTION: Shut off tractor engine before detaching PTO driveline. Entanglement in a rotating driveline can cause serious injury or death.

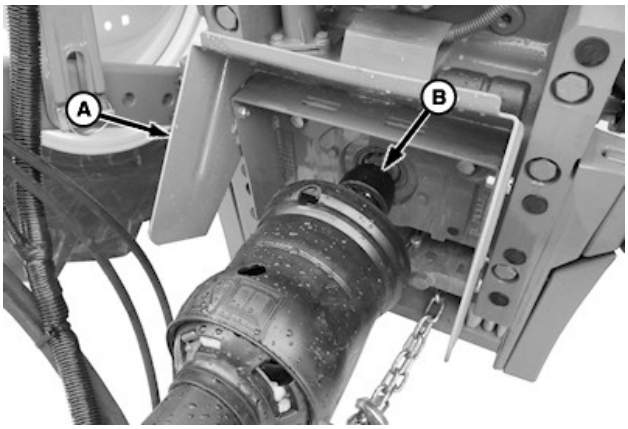

E83671—UN—26JUN17

A—PTO Shield
B—Collar

11. Raise tractor PTO shield (A), if equipped.
12. Support the driveline and pull back on collar (B). Slide the driveline off the tractor shaft. Place the driveline in the PTO support on the jackstand.
13. Lower the tractor PTO shield.
14. Disconnect the safety chain from the tractor.
15. Remove the hitch pin.
16. Carefully drive the tractor away from baler.

DP99999,0000D6B-19-07NOV17

Store Hydraulic Hoses and Wire Harness

CAUTION: Escaping fluid under pressure can penetrate the skin causing serious injury. Avoid the hazard by relieving pressure before disconnecting hydraulic or other lines.

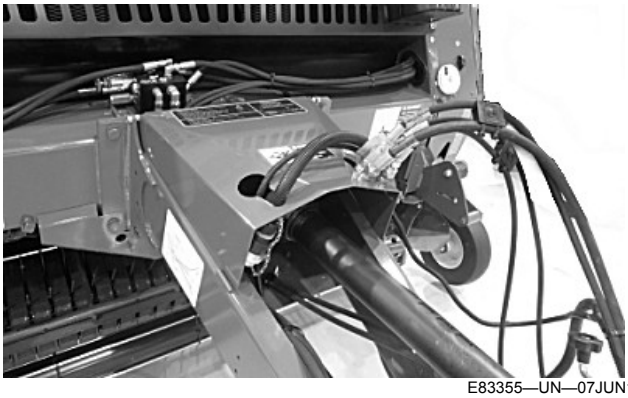

E83355—UN—07JUN17

Install protective caps on all hydraulic hose couplers. Place the hose couplers and wire harness connectors in the slots in the baler PTO shield to keep them clean by avoiding contact with the ground. Fold the hoses and wire harnesses and place them in the baler tongue.

DP99999,0000D74-19-07NOV17

Prepare Baler for Transport

CAUTION: To avoid injury to others, transport baler with bale chamber empty.

1. Before transporting the baler:
   a. Empty the bale chamber and close the gate.
   b. Raise the pickup to full height.
   c. Install all shields. Close and latch side doors.
2. Close gate.
3. Raise pickup fully.
4. Lock doors.

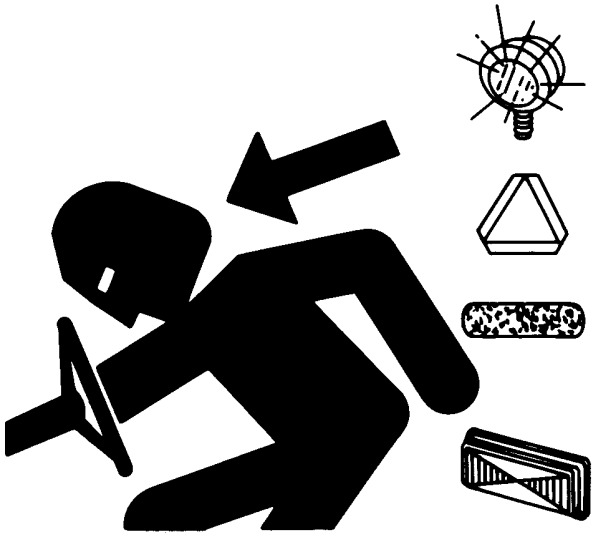

TS951—UN—12APR90

CAUTION: Prevent collisions between other road users, slow moving tractors with attachments or towed equipment, and self-propelled machines on public roads. Frequently check for traffic from the rear, especially in turns, and use turn signal lights.

Use headlights, flashing warning lights, and turn signals day and night. Follow local regulations for equipment lighting and marking. Keep lighting and marking visible, clean, and in good working order. Replace or repair lighting and marking that has been damaged or lost.

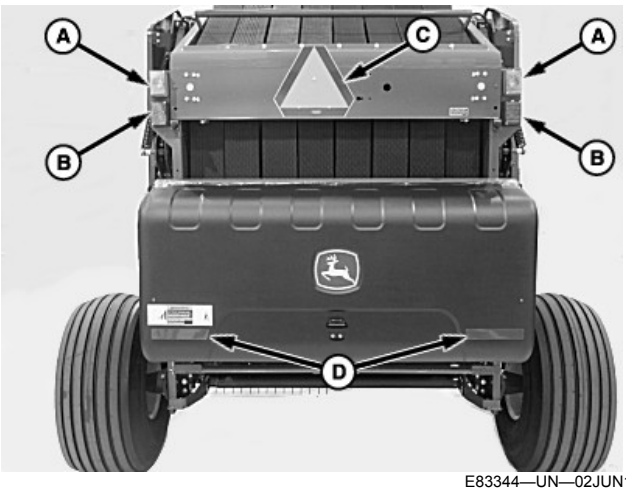

E83344—UN—02JUN17

A—Turn or Warning Lights (Amber)
B—Tail Lights (Red)
C—SMV Emblem
D—Reflectors

5. Be sure turn or warning lights (A), tail lights (B), SMV emblem (C), and reflectors (D) are clean and visible. Make sure that the baler warning lights and turn signals operate at the same time as the tractor warning lights and turn signals.

CAUTION: Attach a safety chain of adequate strength to help control the baler if it separates from the drawbar. Do not use the safety chain for towing.

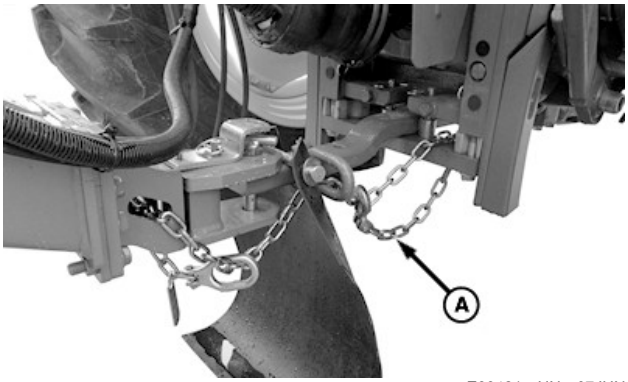

E83421—UN—07JUN17

Safety Chain

A—Safety Chain

6. Using the appropriate adapter parts, attach a safety chain (A) from the baler hitch to the tractor drawbar support or other specified anchor location. Provide only enough slack in the chain to permit turning.
7. If transporting the baler behind a tractor without connecting the PTO driveline, remove the driveline from the baler. Transport the driveline parts in another vehicle to prevent loss, damage, and contamination.

DP99999,0000D6F-19-07JUN17

Follow Safe Transport Procedures

CAUTION: To help prevent severe injury or death to you or someone else, follow recommended transport procedures:

- **Transport with bale chamber empty.**
- **Raise pickup fully.**
- **Travel at a reasonable and safe speed. Do not exceed weight and speed guidelines shown in OBSERVE MAXIMUM TRANSPORT SPEED found in the Safety section. Reduce speed considerably when traveling over rough ground.**
- **Stop slowly.**
- **Avoid possible loss of control or tractor overturn. Tow only with correctly ballasted tractor.**
- **Sound tractor horn before backing baler up.**

If necessary, add ballast as described in your tractor operator's manual. Add ballast to tractor as required to maintain stability.

PP98408,000100E-19-11FEB13

Light Enhancement Module Operation

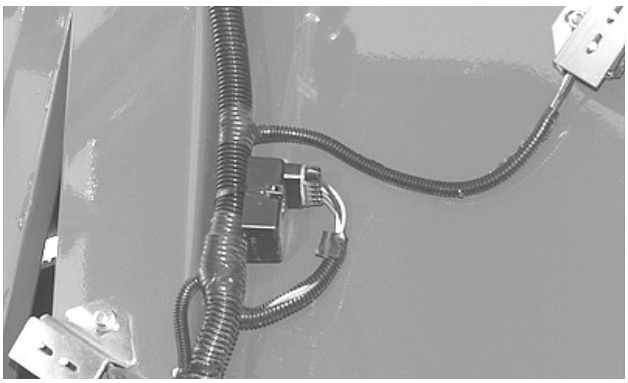

E47544—UN—06DEC99

Located on Right-Hand Sidesheet

In addition to tail and warning lights, the lighting circuit incorporates a lighting enhancement module. This module causes red tail lights to function as turn signals as well as tail lights. During normal transport, both amber warning lights will flash in unison at high intensity and both red tail lights will illuminate steady at low intensity.

When a turn is signaled, the red tail light in direction of turn will flash at high intensity in unison with the amber warning light. The opposite side amber and red lights will illuminate steady at high intensity.

PP98408,000100F-19-11FEB13

Extended Rear-View Mirror

E63790—UN—15JUN12

CAUTION: When towing the baler on public roads, an extended mirror to improve visibility of traffic behind the baler is recommended. See your John Deere dealer.

PP98408,0001010-19-11FEB13

Break-In Baler

IMPORTANT: Belts and drive loads increase as the bale size approaches maximum diameter. Frequent forming of oversize bales can lead to premature failures.

A break-in period of approximately 50 bales or until paint inside bale chamber has worn off can increase the life and reduce maintenance of baler. During the break-in period, a smaller and lower density bale is recommended.

BaleTrak™ Pro and Plus systems are preset at the factory. Monitor-controller setting for bale diameter is 1.42 m (56 in).

Before operation, lubricate members of driveline liberally.

SF04007,0000EE3-19-02AUG17

After the First 10 Hours—Wheel Nut Torque

E67267—UN—09AUG12

21.5L x 16.1 Tires

Check wheel nut torque after the first 10 hours of use. (See TIRE INSTALLATION and WHEEL NUT TORQUE in Preparing the Baler section.)

IMPORTANT: Whenever a wheel has been removed and installed, check wheel nut torque after one hour of operation and repeat until nuts maintain specified torque.

PP98408,000047F-19-10JUL13

After the First 50 Hours—Gear Case

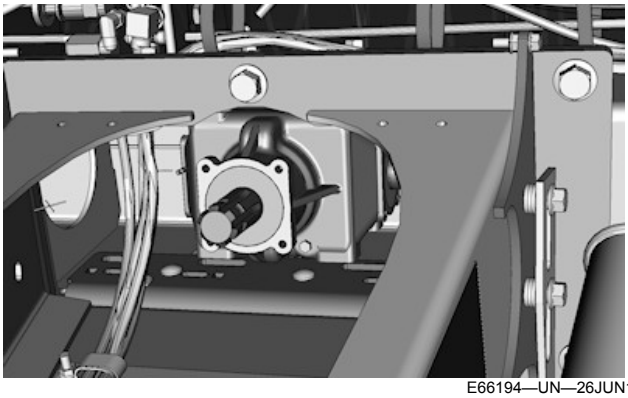

E66194—UN—26JUN12

Gear Case (560M MegaWide™ Plus Pickup)

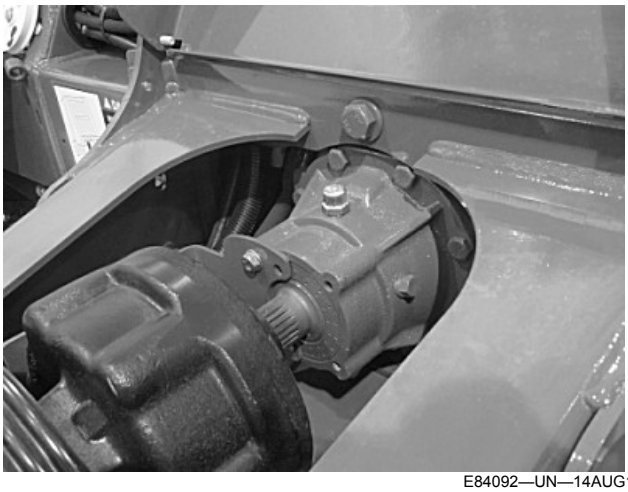

E84092—UN—14AUG17

Gear Case (HC2 Feed System)

Change the oil in the gear case after the first 50 hours of operation. (See Annually in Lubrication and Maintenance section.)

DP99999,0000DBD-19-25AUG17

BaleTrak is a trademark of Deere & Company

After the First 50 Hours—Wheel Nut Torque

E67267—UN—09AUG12

21.5L x 16.1 Tires

Check wheel nut torque after the first 50 hours of use. (See TIRE INSTALLATION and WHEEL NUT TORQUE in Preparing the Baler section.)

IMPORTANT: Whenever a wheel has been removed and installed, check wheel nut torque after one hour of operation and repeat until nuts maintain specified torque.

PP98408,0000481-19-10JUL13

Before Each Use of the Baler

Check the Belts:

NOTE: Belts are designed specifically for this machine and are tested to withstand a normal usage of the baler.

Due to the different environments, the belts can be damaged by foreign objects. This damage generally does not generate any functional or reliability issues. However, if the damage is located in the bale shape sensor path, contact your John Deere dealer to prevent any additional damage to the belt.

Adjust the Baler:

1. Adjust pickup height. (See Adjust Pickup Height in this section.)
2. Adjust pickup float springs. (See Adjust Pickup Float Springs in Service-Baler section.)
3. Adjust pickup gauge wheels. (See Adjust Pickup Gauge Wheels in this section.)
4. Adjust windrow compressor roll height. (See Adjust Roller Baffle Height in Service-Baler section.)
5. Adjust the cut length by adding or removing precutter knives. (MegaWide™ Plus and MegaWide™ HC2 only.)

Set Monitor-Controller Functions:

1. Adjust bale diameter. (See Adjust Bale Diameter in this section.)
2. Adjust soft core diameter and density (if equipped). (See Adjust Variable Core Diameter in this section.)
3. Adjust bale density. (See Adjust Bale Density in this section.)
4. Reset the bale counter. (See View and Reset Bale Counters in this section.)
5. Disengage or engage the precutter knives. (MegaWide™ Plus and MegaWide™ HC2 only.)

DP99999,0000E26-19-26OCT17

Crop Preparation

Make windrows either:

- **Up to one-half the width of the baler chamber.**
- **The full width of the baler chamber to eliminate weaving.**

Unless bales are being made for silage or a preservative is being applied to hay, wait until moisture content of hay is 20% or drier before baling.

For additional information and a more in-depth description on hay and forage harvesting, see your John Deere dealer or qualified service provider.

DP99999,0000D75-19-10OCT17

Recommended Baling Guidelines

IMPORTANT: Under normal to moderately heavy crop conditions, operate the tractor at 1800 rpm. Under some light crop conditions, it can help to operate even slower (for example, 1500 rpm). Under some heavy crop conditions, it can be necessary to operate at a higher rpm (above 1800).

For consistent density and properly shaped bales the following conditions must be set:

- Bale shape sensors properly adjusted. (See Adjust Bale Shape Sensor—In Shop Procedure [Channels 007 and 009] in Service—BaleTrak™ Pro and Plus System section.)
- Correct tractor tire spacing. (See Adjust Tractor Wheels in Preparing the Tractor section.)
- Proper driving technique.

Baling windrow one-half width or less than bale chamber:

1. Start feeding windrow in the center of baler.
2. Move quickly to one side for several yards, feeding the baler as close as possible to the side sheet, without leaving hay in the field.

NOTE: Weaving back and forth across the windrow must be done quickly in a crisp zigzag fashion to balance crop intake side-to-side. Weaving too often or too slowly puts too much crop in the center of the bale and must be avoided.

3. Move quickly to the other side for several yards, feeding the baler as close as possible to the side sheet, without leaving hay in the field.
4. Move quickly back to the other side, feeding the baler as close as possible to the side sheet. Continue feeding this side until the top bar on the monitor display lights or the other bale shape bars drop into the red.
5. Then quickly drive to the other side and continue feeding this side until the top bar on the monitor display lights or the other bale shape bars drop into the red.
6. Continue to feed in this manner, weaving from one side to the other and taking one set of bars to the top and then the other, until the near full indicator is flashing. Then finish up the bale by getting the bars

MegaWide is a trademark of Deere & Company

BaleTrak is a trademark of Deere & Company

on both sides as high and as even as possible before reaching full size. Both sides must be in the green zone when finished. If possible, finish the bale by feeding the left side.

As bale diameter increases, bars are less sensitive to rise and fall as hay is fed into the baler. **Do not weave from one side unless the top bar is lit or the bars are at least in the green zone. Avoid baling with either of the bale shape displays in the red zone.**

The tensioning valve, which controls bale density, is set at less than maximum pressure when shipped from the factory. This is to provide for a break-in period of approximately 50 bales. To change bale density (see Adjust Bale Density in this section).

If operating at less than maximum pressure, with the variable core feature engaged, or in some crop conditions, the top bar or bars on the monitor do not come on. If the top bar has not come on after driving on one side for several inches of bale growth while feeding the crop as close as possible to the side sheet, then the highest bar that is on becomes the top bar.

If it is desired long term to operate at less than maximum pressure, then the bale shape sensors can be adjusted to cause the top bar of the display to come on by using Adjust Bale Shape Sensor—In Shop Procedure [Channel 007 and 009] in Service BaleTrak™ Pro and Plus System section.

Crop Preparation

Make windrows either:

- **Up to one-half the width of the baler chamber.**
- **The full width of the baler chamber to eliminate weaving.**

Unless bales are being made for silage or a preservative is being applied to hay, wait until moisture content of hay is 20% or drier before baling.

For additional information and a more in-depth description on hay and forage harvesting, see the John Deere dealer or qualified service provider.

Handling Round Bales

See loader and tractor operator's manuals on proper procedures for lifting and handling round bales.

Handling Round Bales with Net Wrap

Do not snag or tear the wrap material. Snags or tears in the net wrap material can reduce durability of bales and detract from hay quality when bales are stored outside.

Handling Round Bales with B-Wrap

Do not snag or tear the wrap material. Snags or tears in the net wrap material can reduce durability of bales and detract from hay quality when bales are stored outside.

Orientate breathable material seam so that water is shed after moving (between noon and six o’clock). Ensure that the seam overlap faces down so water cannot get in.

Feeding Round Bales

Improperly disposing of waste can threaten the environment and ecology. Remove wrapping material from bales before they are fed to reduce possible problems of material wrapping in machinery or ingestion by livestock. Inquire on the proper way to recycle or dispose of waste from your local environmental or recycling center, or from your John Deere dealer.

DP99999,0000E20-19-27NOV17

Check Baler Performance in the Field

A performance check for the baler can be done after a break-in period of 50 bales.

1. Set the tractor wheel spacing (inside tire-to-tire) at least as wide as the baler pickup. (See ADJUST TRACTOR WHEELS in Preparing the Tractor section.)
2. Form a uniform windrow the full width of the baler pickup and long enough to make one complete bale. Windrow width must be:
   - 460M: 1.22 m (4 ft)
   - 560M: 1.52 m (5 ft)
3. Adjust the bale density valve for maximum density (turn valve knob clockwise until it stops).
4. Run the tractor at 1800—2000 rpm. Certain crop conditions can require reduced engine speed and a higher transmission gear to maintain ground speed. Select a gear that provides a travel speed of 6—8 km/h (4—5 mph).
5. Bale the windrow. Observe the bale density gauge on the baler and the bale shape bars on the monitor display.
   - After bale size reaches 0.91 m (3 ft) or larger, the bale density gauge needle must almost reach the red zone.
   - As the bale is being formed, the bale shape bars must be able to reach 24 bars when the respective side of the chamber is full.
6. The bale must be tight with uniform density and even on both corners. If not, see the Troubleshooting section.

DP99999,0000D18-19-28SEP17

Interpret Bale Shape Indicators

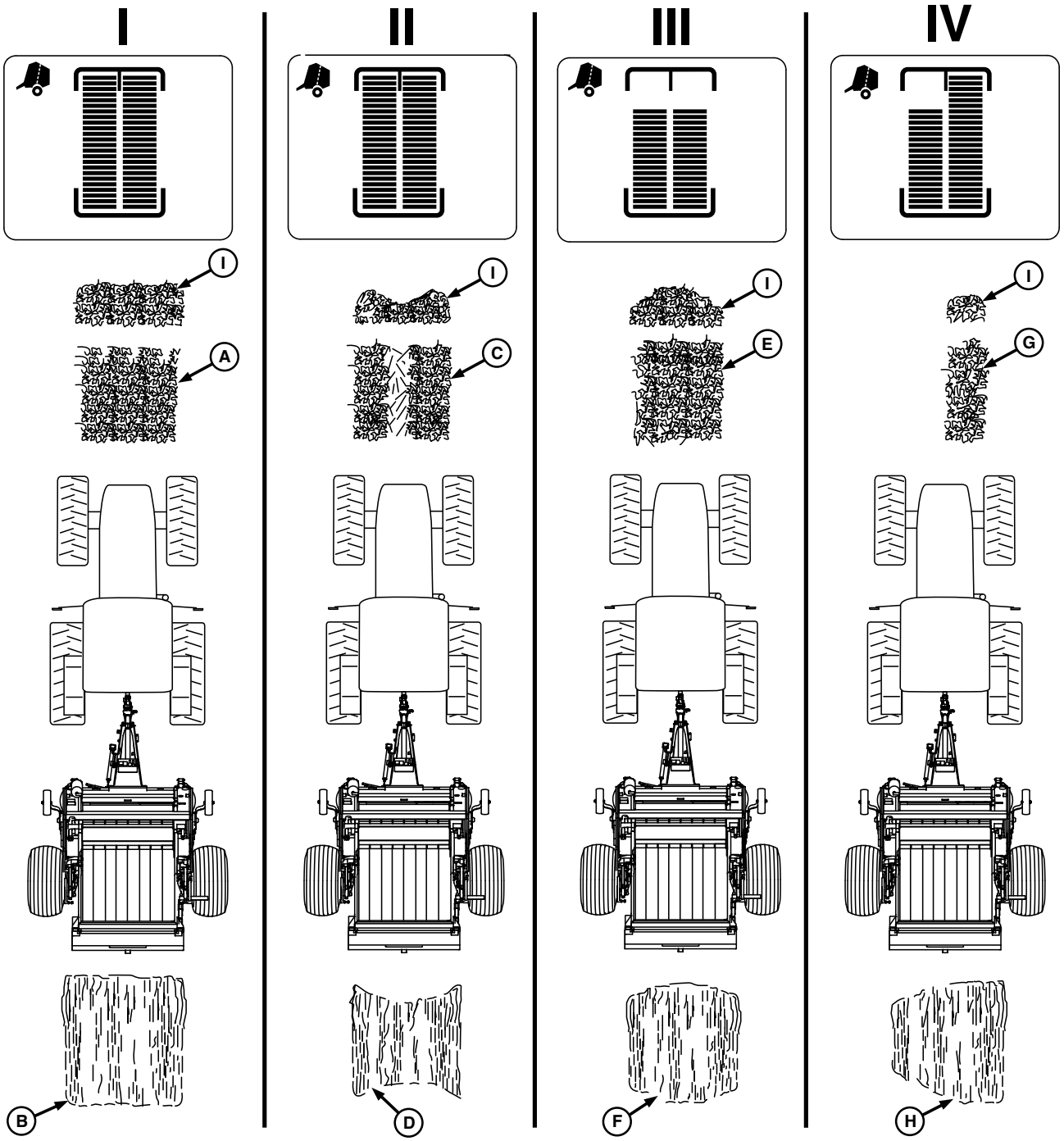

E82741—UN—07SEP17

A—Uniform Windrow
B—Best Shaped Bale
C—Full-Width Windrow
D—Hourglass-Shaped Bale
E—Less than Full-Width Windrow
F—Barrel-Shaped Bale
G—Narrow Windrow
H—Cone-Shaped Bale
I—Windrow Cross Section

The illustration on the facing page and the following information describes the relationship between the monitor-controller display, windrow variations, and actual bale shape.

To ensure optimum bale shape and maximum bale density, the top bar must be shown on BOTH sides of the bale shape indicator display as shown in Example I. The top bars must be displayed when bale is being wrapped. (See Recommended Baling Guidelines in this section.)

I— Best shaped bales (B) are formed when the windrow (A) has uniform density from side-to-side (I) and the width is the same as bale chamber.

Weaving is not necessary. Create windrows up to one-half the width of the bale chamber and follow the bale shape bars. (See Recommended Baling Guidelines in this section.)

II— If a full-width windrow (C) is heavy on the outside edges and light at the center, an hourglass-shaped bale (D) is formed even though bale shape bars are balanced and all lit. Hourglass-shaped bales can also be formed with wide windrows on balers equipped with the MegaWide™ Plus pickup.

If possible, weaving back and forth across windrow helps fill the middle of the bale. Otherwise, proper windrow formation is needed.

III— Bale shape bars do not reach maximum height and a barrel-shaped bale (F) is formed if any of the following conditions exist:

- Windrow width (E) is approximately 2/3—3/4 the width of the baler.
- Windrow width is correct but the operator is not weaving over far enough.
- The windrow is full width but density is heavier in the middle of the windrow.
- Baler is weaving back and forth too frequently.

If the windrow is almost as wide as the bale chamber, reduce the tractor engine rpm and increase ground speed to spread the material across the pickup.

The windrow width must be less than one-half the bale chamber width or the full bale chamber width. If necessary, rake windrows to obtain correct width.

Bale shape bars cannot reach maximum height when operating at reduced bale density or using the variable core option. This is also true when operating in certain crops such as light coastal Bermuda grass or short wheat straw, because the ends of the bale are soft.

IV— If a narrow windrow (G) is baled without weaving back and forth, a cone-shaped bale (H) is formed because more material is fed to one side.

To keep the bale shape bars as high as possible, weave back and forth across narrow windrows. (See Weave In The Windrow in this section.)

NOTE: Bale shape sensitivity is adjustable between responsive and dampened. (See Set Bale Shape Sensitivity [Channel 011] in this section.)

DP99999,0000D4D-19-09NOV17

Weave in the Windrow

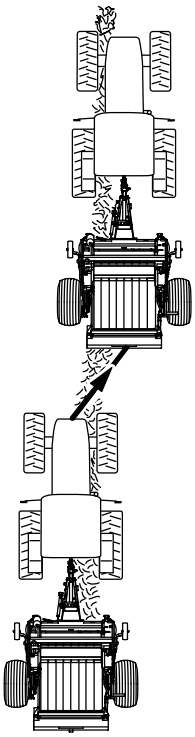

E60998—UN—15MAR12

Weaving back and forth across the windrow must be done quickly in a crisp zigzag fashion to balance crop intake side-to-side. Weaving too often or too slowly puts too much crop in the center of the bale and must be avoided.

Move quickly to one side for several yards, feeding the baler as close as possible to the side sheet, without leaving hay in the field. Then, move quickly to the other side for several yards, feeding the baler as close as possible to the side sheet.

See RECOMMENDED BALING GUIDELINES in this section.

DP99999,0000DEF-19-09AUG17

Start a Bale in Difficult Conditions

1. See Bale Short, Dry, Slick Crops; Bale Cornstalks; Bale Wet Hay; and Bale Long, Stiff, Cane-Type Crops in this section.

MegaWide is a trademark of Deere & Company

2. Regular Pickup; Check pickup belt tension and condition. (See Adjust Pickup Drive Belt Idler in Service—Baler section.)

   MegaWide™ Plus Pickup; Check pickup slip clutch. (See Check Pickup Slip Clutch Torque in Service—Baler section.)

3. Check for broken or missing pickup teeth.
4. To ensure smooth uninterrupted crop flow while starting a bale, try the following:
   - Select a gear that gives 6—8 km/h (4—5 mph) forward travel speed at rated PTO speed.
   - Reduce tractor engine speed to a low idle (900—1200 rpm) when starting the bale.
   - Drive forward at least 3 m (10 ft) without stopping to allow enough crop into the baler to start rolling.
   - Resume rated PTO speed.
5. If windrows are wide and ropy, do the following:
   a. Operate pickup as high as practical.
   b. Start in a slow gear, allowing crop to feed in from the sides.
   c. Approach windrow with crop centered on pickup to reduce plugging at crop dividers. Do not cut across the windrow.
   d. Travel forward slowly, as needed, to allow material to feed smoothly.
6. Use variable core feature, if equipped, for long, stiff, cane-type crops or short, dry crops.
7. Make windrows narrower than the bale chamber width and avoid getting crop under deflectors to improve bale starting in crops such as bahia grass, coastal Bermuda grass, sudex, sudan grass, and star grass.
8. Check belt and starter roll bars for excessive wear that can contribute to bale starting Problems. (See Check Pickup Tooth Rotational Play in Service—Baler section.)

SF04007,00010BC-19-27NOV17

MegaWide is a trademark of Deere & Company

Bale Short, Dry, Slick Crops

TS679—UN—28SEP89

CAUTION: DO NOT TAKE CHANCES! To avoid injury or death by being pulled into the machine:

Do not attempt to feed crop or twine into the baler or unplug the feed area while the baler is running. The baler feeds material faster than you can release it.

Disengage the PTO and shut off the tractor engine.

To reduce plugging try one or more of the following techniques:

1. Regular pickup: Check the pickup belt tension and condition. (See ADJUST PICKUP DRIVE BELT IDLER in Service—Baler section.)

   MegaWide™ Plus pickup: Check the pickup slip clutch. (See CHECK PICKUP SLIP CLUTCH TORQUE in Service—Baler section.)

2. Check for missing or broken pickup teeth.
3. Raise the pickup as high as practical.
4. Reduce engine speed to 1500 rpm or below (reduces chaffing) and shift the transmission to a higher gear to maintain ground speed.
5. Reduce bale density as necessary. (See ADJUST BALE DENSITY in this section.) If equipped, use the variable core feature to reduce bale density when starting a bale. (See VARIABLE CORE FEATURE in the Operating the Baler section.)
6. Regular pickup only: Remove individual compressor rods, leaving one center rod and one rod on each end of the cross-tube. If material still accumulates, remove the compressor rack. Always replace the compressor rack under normal conditions. (See REMOVE COMPRESSOR RACK in the Service-Baler section.)
7. Make larger windrows (rake together as necessary), but keep windrows narrower than the bale chamber width.
8. Disengage the PTO anytime that crop is not being fed into the baler, such as turns and field borders.

9. Regular pickup only: In short, dry conditions, it can be necessary to lower the baler. (See WHEEL SPINDLE POSITIONS in Preparing the Baler section.)
10. Adjust the pickup float springs to provide more force (float). (See ADJUST PICKUP FLOAT SPRINGS in Service—Baler section.)
11. When baling dry straw, it can be necessary to place twine across the full width of the bale. Or use net wrap (if equipped) to prevent straw from coming out of the feed opening while tying. (See Dry Straw Twine Wrap Program in this section.)
12. For the MegaWide™ HC2 feed system, when precutting is not required, disengage the knives to reduce crop buildup and help prevent crop from coming out of the feed opening while applying twine or net wrap.

NOTE: Bales stored with fewer than two layers of net can be damaged by handling or weather conditions.

Add at least one additional layer of net wrap when baling using a precutter.

13. When applying net wrap material, different crops require a different number of net wrap layers for effective baling. The following minimum number of layers of net wrap are recommended:
    - 2 layers of net wrap for hay
    - 3 layers of net wrap for straw, wheat hay, and cereal grains
    - 4 layers of net wrap for corn stalks, sudex, hay grazer, and milo stalks

NOTE: If the baler is equipped with the slip clutch alert feature and it is turned on, the system applies the desired number of layers of net wrap or twine, regardless of PTO speed. Thus, no change is needed on the monitor.

These guidelines apply only if the speed compensation program and slip clutch alert system are turned off.

If machine rpm is less than rated PTO speed, use the following charts as a guideline for the desired net wrap layers or twine spacing.

NET WRAP CHART		
Engine rpm	Desired Number of Net Wrap Layers	Approximate Monitor Setting Needed
Rated PTO	2	2
	3	3
1800 rpm	2	2.4
	3	3.6
1500 rpm	2	2.9
	3	4.3
1300 rpm	2	3.3
	3	5.0

TWINE SPACING CHART		
Engine rpm	Mechanical Setting	Monitor-Controller Setting
Rated Speed	10 cm (4.0 in)	10 cm (4.0 in)
1800 rpm	10 cm (4.0 in)	9 cm (3.5 in)
1500 rpm	10 cm (4.0 in)	8 cm (3.0 in)
1300 rpm	10 cm (4.0 in)	6 cm (2.5 in)

If bales fail to start rotating due to one or both sides of the windrow extending outside the width of the bale chamber, try the following suggestions:

1. Make windrows narrower than the bale chamber width.
2. Center the baler over the windrow while starting to avoid getting crop under the crop dividers.

DP99999,0000DF3-19-20SEP17

Bale Cornstalks

TS679—UN—28SEP89

CAUTION: DO NOT TAKE CHANCES! To avoid injury or death by being pulled into the machine:

Do not attempt to feed crop or twine into baler or unplug feed area while the baler is running. The baler feeds material faster than you can release it.

Disengage PTO and shut off engine.

1. Cut or rake stalks before baling to improve pickup tooth life.
2. Do not rake more than six rows together or plugging can occur at the pickup area. Higher productivity can be obtained by baling smaller windrows at faster ground speeds. Avoid crowding the edges of the windrow and avoid windrows wider than the baler chamber to reduce plugging at the crop dividers.

- Since cornstalks tend to roll and spread out in front of the pickup, windrows 1/2—3/4 the width of the bale chamber usually do not require weaving, and reduce plugging at crop dividers.
- Windrows less than 1/2 the width of the bale chamber, and normal weaving allows one side of the pickup to clear as the other side is feeding.
- Let shredded cornstalk windrows sit overnight if possible. Windrows settle overnight gaining moisture which improves feeding and reduces wear on pickup components.

3. Maintain rated PTO speed for most cornstalk baling conditions, to facilitate a regular flow to the bale chamber.
4. If equipped, remove the starter roll scraper.
5. MegaWide™ Plus pickup only: Unhook both pickup baffle torsion springs allowing the compressor rack to hold the crop down on the pickup and facilitate regular crop flow.
6. Check for missing or broken teeth. Replace if necessary.
7. Regular pickup: Check pickup belt tension and condition. (See ADJUST PICKUP DRIVE BELT IDLER in Service—Baler section.)

   MegaWide™ Plus pickup: Check pickup slip clutch. (See CHECK PICKUP SLIP CLUTCH TORQUE in Service—Baler section.)
8. Add extra compressor rods if cornstalks push up between existing rods and cause plugging.
9. Install the following kits to increase productivity even further:
   - Cornstalk Feeding Enhancement Kit.
   - Pickup Filler Plates for Cornstalks.
   - Hydraulic Pickup Lift Kit.

NOTE: Bales stored with fewer than two layers of net can be damaged by handling or weather conditions.

Add at least one additional layer of net wrap when baling using a precutter.

10. When applying net wrap material, different crops require a different number of net wrap layers for effective baling. The following number of layers of net wrap are recommended:
    - 2 layers of net wrap for hay
    - 3 layers of net wrap for straw, wheat hay, and cereal grains
    - 4 layers of net wrap for corn stalks, sudex, hay grazer, and milo stalks

NOTE: If the baler is equipped with the slip clutch alert feature and it is turned on, the system applies the desired number of layers of net wrap or twine, regardless of PTO speed. Thus, no change is needed on the monitor.

If machine rpm is less than rated PTO speed, use the following charts as a guideline for desired net wrap layers or twine spacing.

NET WRAP CHART		
Engine rpm	Desired Number of Net Wrap Layers	Approximate Monitor Setting Needed
Rated PTO	2	2
	3	3
1800 rpm	2	2.4
	3	3.6
1500 rpm	2	2.9
	3	4.3
1300 rpm	2	3.3
	3	5.0

TWINE SPACING CHART		
Engine rpm	Mechanical Setting	Monitor-Controller Setting
Rated Speed	10 cm (4.0 in)	10 cm (4.0 in)
1800 rpm	10 cm (4.0 in)	9 cm (3.5 in)
1500 rpm	10 cm (4.0 in)	8 cm (3.0 in)
1300 rpm	10 cm (4.0 in)	6 cm (2.5 in)

DP99999,0000DFE-19-20SEP17

Bale Long, Stiff, Cane-Type Crops

TS679—UN—28SEP89

CAUTION: DO NOT TAKE CHANCES! To avoid injury or death by being pulled into the machine:

Do not attempt to feed crop or twine into baler or unplug feed area while the baler is running. The baler feeds material faster than you can release it.

Disengage PTO and shut off engine.

If bales fail to start rotating due to crop wedging into top of starting chamber, try the following suggestions:

1. Regular pickup: Check pickup belt tension and condition. (See ADJUST PICKUP DRIVE BELT IDLER in Service—Baler section.)

   MegaWide™ Plus pickup: Check pickup slip clutch. (See CHECK PICKUP SLIP CLUTCH TORQUE in Service—Baler section.)
2. Condition the crop as much as possible so stems bend and form the bale core without wedging.
3. Make windrows narrower than the bale chamber width.
4. Approach the windrow with the crop centered in the pickup. Avoid getting crop under the crop dividers.
5. Approach the windrow at an angle and immediately turn and drive forward to allow stems to bend and start the bale core. This approach can also help avoid getting crop under the crop dividers.
6. If equipped with a hydraulic pickup lift, raise and lower the pickup while moving at reduced ground speed during bale starting.
7. Travel forward at least 3 m (10 ft) without stopping to allow enough crop into the baler to start rolling.
8. Reduce bale density or use the variable core feature, if equipped. Reduced belt tension allows the belts to deflect while starting the bale and forming the bale core. (See ADJUST BALE DENSITY or ADJUST VARIABLE CORE DIAMETER in this section.)
9. Surface moisture on the bottom of the windrow causes the crop to slip more easily against the forming belts. To improve bale starts, turn the windrows with a rake or tedder.

NOTE: Bales stored with fewer than two layers of net can be damaged by handling or weather conditions.

Add at least one additional layer of net wrap when baling using a precutter.

10. When applying net wrap material, different crops require a different number of net wrap layers for effective baling. The following minimum number of layers of net wrap are recommended:
    - Two layers of net wrap for hay
    - Three layers of net wrap for straw, wheat hay, and cereal grains
    - Four layers of net wrap for corn stalks, sudex, hay grazer, and milo stalks

NOTE: If the baler is equipped with the slip clutch alert feature, and it is turned on, net and twine application is automatically adjusted as rpm is changed. Thus, no change is needed on the monitor.

11. If machine rpm is less than rated PTO speed, use the following charts as a guideline for the desired net and twine application.

NET WRAP CHART		
Engine rpm	Desired Number of Wrap Layers	Approximate Monitor Setting Needed
Rated PTO	2	2
	3	3
1800 rpm	2	2.4
	3	3.6
1500 rpm	2	2.9
	3	4.3
1300 rpm	2	3.3
	3	5.0

TWINE SPACING CHART		
Engine rpm	Mechanical Setting	Monitor-Controller Setting
Rated Speed	10 cm (4.0 in)	10 cm (4.0 in)
1800 rpm	10 cm (4.0 in)	9 cm (3.5 in)
1500 rpm	10 cm (4.0 in)	8 cm (3.0 in)
1300 rpm	10 cm (4.0 in)	6 cm (2.5 in)

DP99999,0000DFF-19-26OCT17

Bale Wet Hay

TS679—UN—28SEP89

CAUTION: Do Not Take Chances! To avoid injury or death by being pulled into the machine:

Do not attempt to feed crop or twine into baler or unplug feed area while the baler is running. The baler feeds material faster than you can release it.

Disengage PTO and shut off engine.

If bales fail to start rotating due to windrows being wet on the bottom, try the following suggestions:

1. Regular pickup; Check pickup belt tension and condition. (See Adjust Pickup Drive Belt Idler in Service—Baler section.)

   MegaWide™ Plus pickup; Check pickup slip clutch. (See Check Pickup Slip Clutch Torque in Service—Baler section.)

2. Increase feed opening by:
   - Lowering the pickup as low as practical.
   - Making sure that wheel spindles are in normal position. (See Wheel Spindle Positions in Preparing the Baler section.)
3. Reduce tractor engine speed to a low idle (900—1200 rpm) while starting.
4. Approach the windrow with the crop centered on the pickup to reduce plugging at the crop dividers. Do not cut across the windrow.
5. Travel forward at least 3 m (10 ft) without stopping to allow enough crop into the baler to start rolling.
6. Resume rated PTO speed.
7. Be sure that the tractor drawbar pin or hitch parts are not dragging and bunching the windrow. Use drawbar shielding as necessary.
8. Surface moisture on the bottom of the windrow causes the crop to slip more easily against the forming belts. To improve the bale starts, turn the windrows with a rake or tedder.
9. If not equipped, consider installing a Silage Auger Kit to reduce wet crop buildup on belts and rollers. See your John Deere dealer or qualified service provider.

DP99999,0000E00-19-27NOV17

Handle Round Bales

See loader and tractor operator's manuals on proper procedures for lifting and handling round bales.

PP98408,000113C-19-12FEB13

Handle Round Bales With Net Wrap

Do not snag or tear the wrap material. Snags or tears in the net wrap material can reduce durability of bales and detract from hay quality when bales are stored outside.

DP99999,0000D63-19-24MAY17

Handle Round Bales With B-Wrap

Do not snag or tear the wrap material. Snags or tears in the net wrap material can reduce durability of bales and detract from hay quality when bales are stored outside. Orientate breathable material seam so that water is shed after moving (between noon and six o'clock) so that the seam overlap faces down and water cannot get in.

DP99999,0000D64-19-24MAY17

Feed Round Bales

Improperly disposing of waste can threaten the environment and ecology. Remove wrapping material from bales before they are fed to reduce possible problems of material wrapping in machinery or ingestion by livestock. Inquire on proper way to recycle or dispose of waste from your local environmental or recycling center, or from your John Deere dealer.

PP98408,000113E-19-12FEB13

Lock the Gate

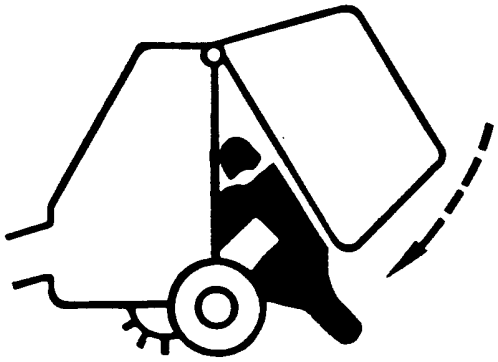

TS698—UN—21SEP89

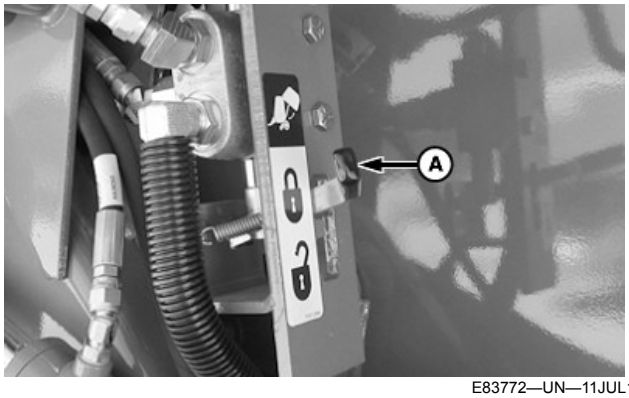

E83772—UN—11JUL17

A—Gate Lock Lever

CAUTION: While working inside or around the baler with an open gate, the gate lock lever (A) must be moved to the locked position. Use this safety feature any time the gate is open. Close the gate any time the baler must be left unattended.

The gate lock valve locks each gate lift cylinder independently with the gate in any position. If the hydraulic lift system fails on one side of the machine, the

gate is still held open by the lift cylinder on the other side.

- Lever up—Gate is locked
- Lever down—Gate is unlocked

DP99999,0000D70-19-11JUL17

Bale Density Gauge

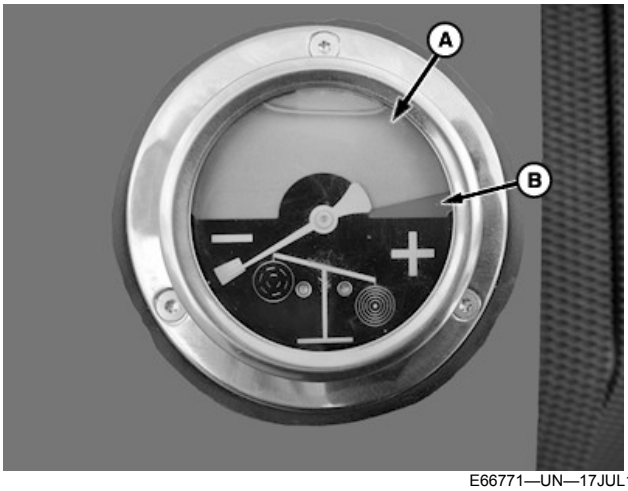

E66771—UN—17JUL12

A—Green Band
B—Red Band

The gauge indicates the relative pressure within the hydraulic bale tension system while forming a bale.

Turning the bale density knob counterclockwise will cause the needle to move toward the minus sign and make lighter bales.

NOTE: The gauge will not register any change made to the density valve until more hay is fed into the baler.

The green band (A) represents normal baler operating pressure range.

If the needle reaches the red band (B):

1. Make sure tractor selector valve returns to neutral while baling.
2. Reduce bale density.
3. Check for faulty gauge or relief valve.

PP98408,000104C-19-11FEB13

Adjust Bale Density

NOTE: To adjust the bale density, close gate and lower belt tension arm. This will allow the bale density knob to be turned more easily.

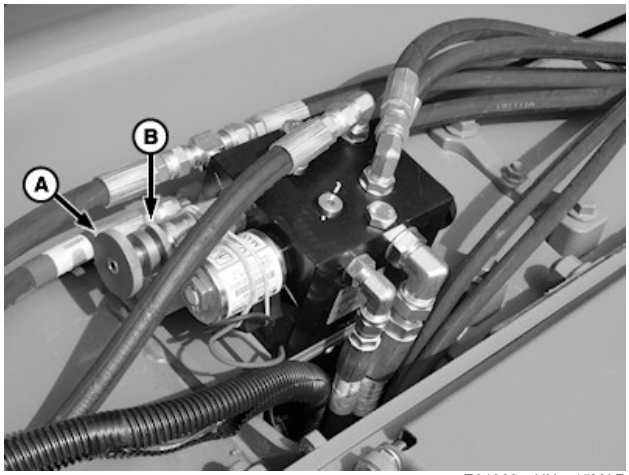

E61060—UN—15MAR12

A—Knob
B—Locking Ring

Tension valve has been preset at the factory. Operate baler at this setting for a break-in period of approximately 50 bales. This will reduce maintenance and increase the life of the baler.

The correct adjustment for this break-in period may be checked by the following procedure:

Loosen locking ring (B) and turn knob (A) clockwise until seated. Turn knob (A) counterclockwise two turns. Tighten locking ring (B).

After the break-in period, adjust bale density as follows:

1. Loosen locking ring (B).
2. Turn knob (A) as desired:
   - Counterclockwise for lighter bales
   - Clockwise for heavier bales
3. Tighten locking ring (B).

PP98408,000104D-19-11FEB13

Variable Core Feature (If Equipped)

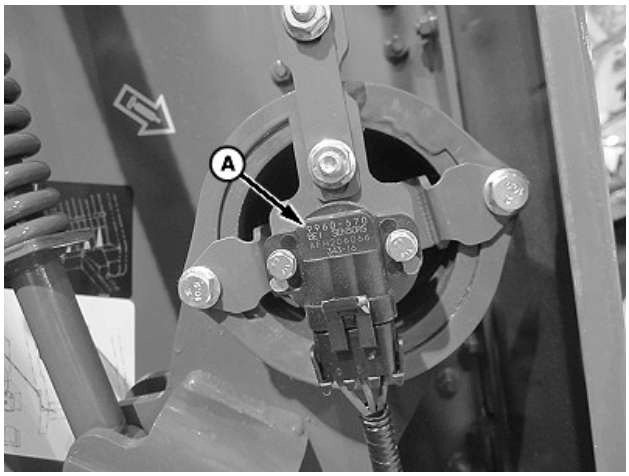

E83509—UN—15JUN17

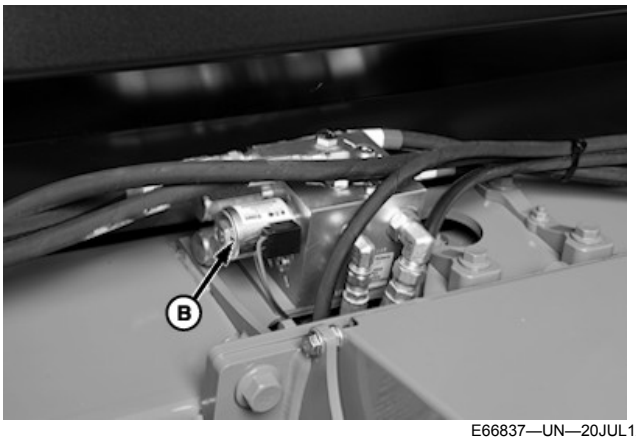

E66837—UN—20JUL12

A—Bale Diameter Sensor
B—Solenoid Valve

The optional Variable Core feature can be used to lower the core density of the bale or can improve bale starting in long, stiff, cane-type crops. This feature uses the monitor-controller in conjunction with the bale diameter sensor (A) and solenoid valve (B) on the tensioning control valve to reduce hydraulic pressure at the rod end side of the tension and gate cylinders.

The diameter of the soft core can be adjusted 81—142 cm (32—56 in) and is set by entering the desired core dimension into the monitor-controller. The initial factory setting for the variable core is 91 cm (36 in). To adjust the soft core diameter setting.

Pushing the Variable Core Diameter button on the monitor-controller energizes the variable core solenoid. The energized solenoid routes the oil from rod end of tension and gate cylinders through the low pressure relief valve, then back to the base end of the tension and gate cylinders. The lower pressure allows a looser bale to form initially.

When the bale size reaches the variable core diameter setting, preset by operator, the monitor-controller de-energizes the solenoid. Oil from the rod end of the tension and gate cylinders is routed through the adjustable pressure relief valve, then back to the base end of the tension and gate cylinders. Bale formation is then completed at the higher relief pressure. The higher pressure forms tighter and denser outer bale layers.

The tractor selector control valve lever must be in the neutral position. If the SCV lever is in the float position, the variable core feature does not work.

DP99999,0000DF2-19-27NOV17

Operate Precutter Knives (If Equipped)

Engage Knives

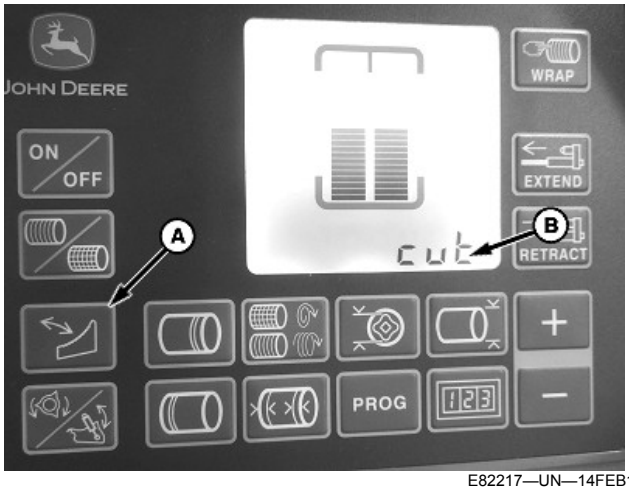

E82217—UN—14FEB17

A—Knife Icon
B—Cut

1. Raise the precutter floor.
2. Press the knife icon (A) on the display.
3. To engage the knives, operate the pickup SCV lever.
4. When the knives are engaged, “cut” (B) appears on the display.

NOTE: If the knives are engaged, the indicator “c” is displayed next to the current bale diameter on the main baling screen.

5. Press the knife icon to return to the main baling screen.

Disengage Knives

E82218—UN—14FEB17

A—Knife Icon
B—Nocut

1. Press the knife icon (A) on the display.
2. To disengage the knives, operate the pickup SCV lever.

3. When the knives are disengaged, “nocut” (B) appears on the display.
4. Press the knife icon to return to the main baling screen.

NOTE: If the knives are engaged, a “c” is displayed next to the current bale diameter on the main baling screen as an indicator.

After raising the knives and returning to the main baling screen, the pickup can raise slightly. This raising is normal; monitor the pickup position frequently and lower the pickup as necessary. To help the pickup follow the field terrain, it is recommended to operate the pickup SCV in the float setting.

GW44282,000073C-19-09AUG17

Operate the Drop Floor

IMPORTANT: Only operate the baler with the drop floor in the raised position, unless unplugging.

E83327—UN—05JUN17

A—UPDN Function Icon

1. Select the drop floor UPDN function icon (A).
2. To raise or lower the drop floor, operate the pickup SCV.

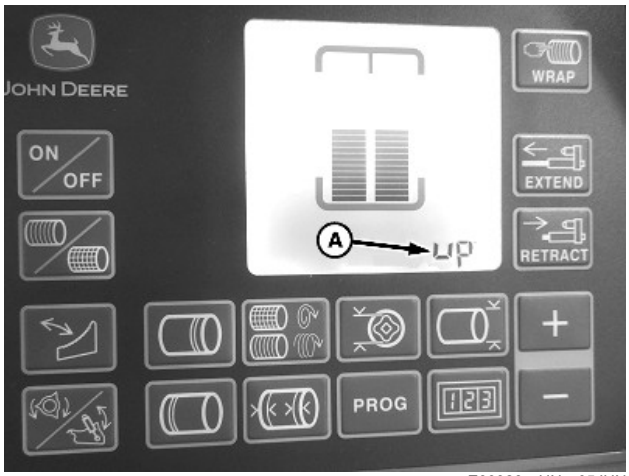

E83328—UN—05JUN17

E83329—UN—05JUN17

A—“up”—Raised Position
B—“dn”—Lowered Position

3. When the floor is raised, the display shows “up” (A).
4. When the floor is lowered, the display shows “dn” (B).
5. To return to the main baling screen, press the UPDN function key.

NOTE: If the drop floor is in the lowered position and the operator returns to the home screen, a “d” is displayed next to the bale diameter indicating that the floor is lowered. If the PTO is engaged an alarm sounds.

After raising the drop floor and returning to the main baling screen, the pickup can raise slightly. This raising is normal; monitor the position frequently and lower the pickup when necessary. To help the pickup follow the field terrain, it is recommended to operate the pickup SCV in the float setting.

DP99999,0000DB0-19-27NOV17

Operate Baler with Bale Push Bar (If Equipped)

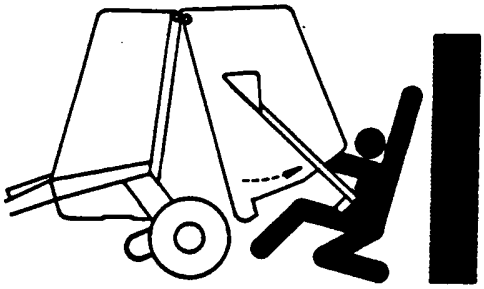

E32671—UN—29NOV88

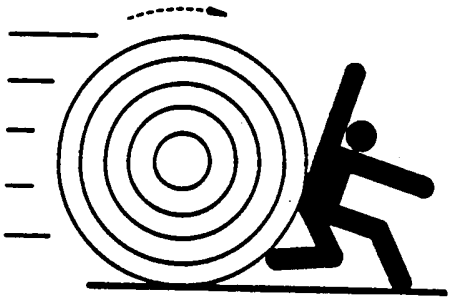

E32692—UN—06DEC88

CAUTION: Bale push bar is activated when gate is opened. Be sure that bystanders are clear and there is sufficient clearance behind baler when opening the gate.

To prevent injury or damage from a rolling bale, discharge bales on level ground or in such a manner that the bale will not roll.

NOTE: Tractor hydraulic flow must be at least 25 L/min. (6.5 gpm) to operate bale push bar when making full diameter and full density bales. Set tractor hydraulic flow controls to open gate in 5—6 seconds.

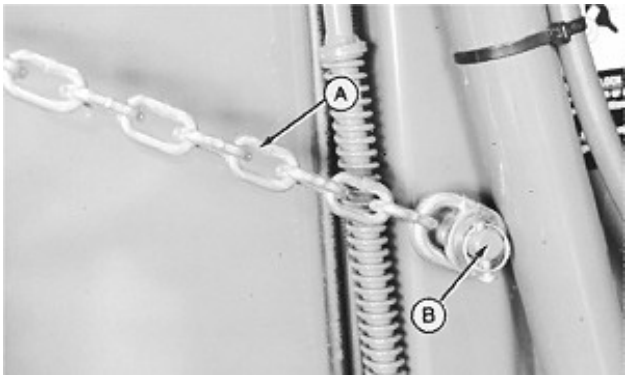

E37418—UN—22JUL93

A—Chains
B—Gate Pins

1. Be sure that both chains (A) are attached to the gate pins (B). (See ENGAGE BALE PUSH BAR in this section.)

E58886—UN—06AUG10

2. Form and wrap bale as usual.

CAUTION: To prevent injury or damage from a rolling bale, discharge bales on level ground or in such a manner that the bale will not roll.

3. Backing up baler is not required unless in rolling terrain conditions where runaway bales are likely. In these conditions, lock out the push bar and position baler so bale will not roll after being ejected.
4. Raise gate to eject bale. Hold tractor hydraulic lever until gate is fully raised. Do not stop gate while raising.

NOTE: A slight forward movement of the tractor can be felt as the bale is rolled back by the push bar.

E58887—UN—06AUG10

5. Lower the gate. Keep hydraulic lever engaged until monitor displays gate closed symbol.
6. Proceed making the next bale.

NOTE: If a bale sticks in the bale chamber, the push bar can swing back before the bale has dropped to the ground. This will prevent the gate from closing. Raise gate fully and drive forward to clear the bale. Push bar will roll over bales up to 1829 mm (6 ft.) in diameter.

PP98408,000105C-19-12FEB13

Engage Bale Push Bar (If Equipped)

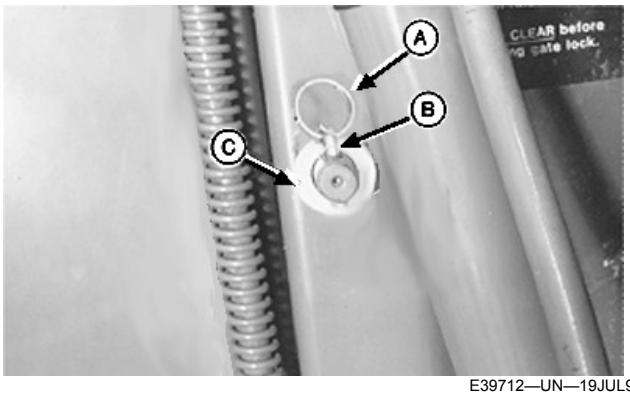

E39712—UN—19JUL96

A—Retaining Ring
B—Pin
C—Washer

1. Remove retaining ring (A) from pin (B).
2. Remove pin (B) and washer (C) from gate pin.

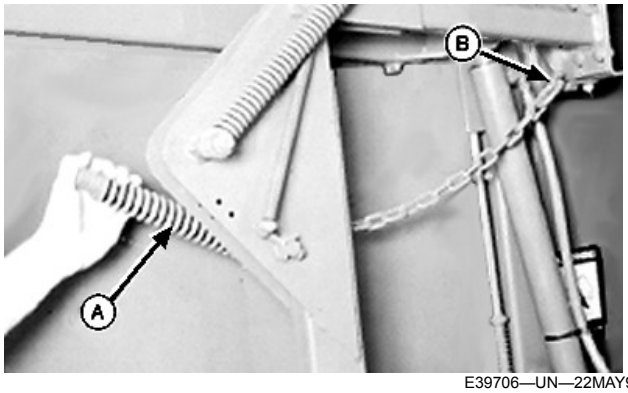

E39706—UN—22MAY96

A—Spring
B—Lockout Hook

3. Remove tension from chain by rotating the spring (A) to the rear. Remove end chain link from lockout hook (B).
4. Let chain hang free to remove any twists.

IMPORTANT: Both chains must be attached to gate pins before operating the push bar. Damage can occur to the push bar and gate if one chain is left in the lockout position or is unhooked.

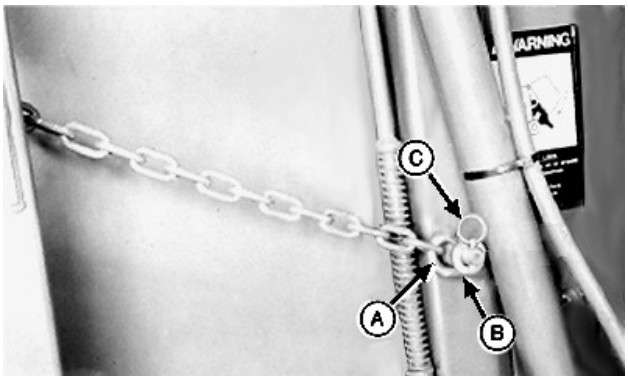

E39707—UN—19JUL96

A—End Chain Link
B—Washer
C—Retaining Ring

5. Attach end chain link (A) on gate pin.
6. Install washer (B). Put pin UP through gate pin and fasten with retaining ring (C).
7. Repeat on opposite side.

PP98408,000105E-19-11FEB13

Lock Out Bale Push Bar (If Equipped)

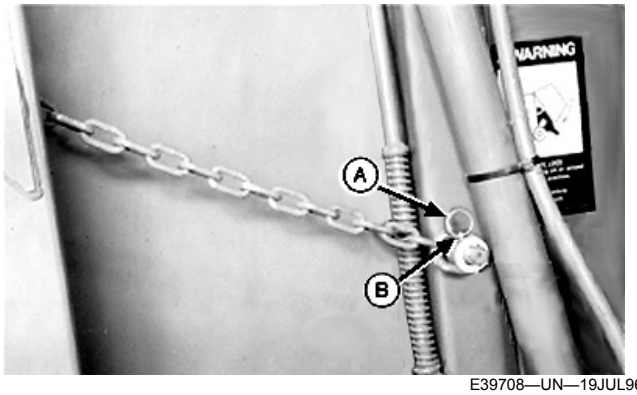

E39708—UN—19JUL96

A—Retaining Ring
B—Pin

Bale push bar will remain in home position, regardless of gate movement, when in the locked out position.

To lock out push bar:

1. Remove retaining ring (A) from pin (B).
2. Remove pin (B) and washer from gate pin.

E39709—UN—22MAY96

A—Spring

3. Remove tension from chain by rotating spring (A). Remove end chain link from gate pin.
4. Let chain hang free to remove any twists.

IMPORTANT: Both chains must be attached to lockout pins to lock out push bar. Damage can occur to the push bar and gate if one chain is left attached to the gate pin or is unhooked.

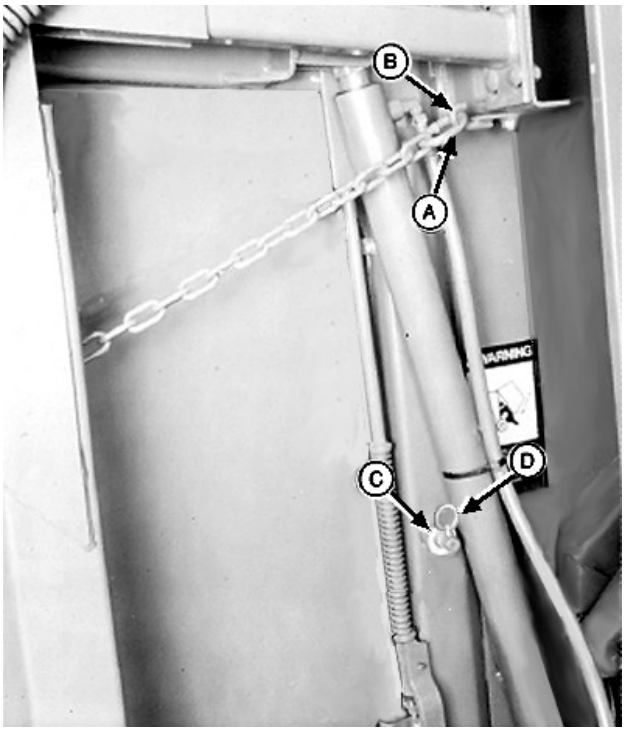

E39710—UN—19JUL96

A—Chain Link
B—Lockout Hook
C—Washer
D—Retaining Ring

5. Attach the end chain link (A) on lockout hook (B). Release spring.
6. Install washer (C). Put pin UP through gate pin and fasten with retaining ring (D).
7. Repeat on opposite side.

NOTE: If operating the baler with push bar locked out, it will be necessary to back up baler before ejecting the bale.

PP98408,000105D-19-11FEB13

Unplug Baler Pickup

1. Back up the baler to clear the windrow.

IMPORTANT: Prevent damage to the pickup drive. Do not operate a raised pickup for a prolonged time to clear the baler.

2. Unplug the pickup using the procedure listed for the pickup type on your baler:
   - Regular Pickup:
     Run the tractor engine rpm at 1500—2100 rpm and engage the PTO to pull the plug through.
   - MegaWide™ Plus Pickup:
     Lower the tractor engine rpm and turn the PTO on and off, slowly compressing and feeding the crop through.
   - MegaWide™ HC2 Feed System:
     Lower the tractor engine rpm and turn the PTO on and off, slowly compressing and feeding the crop through. If the crop does not feed through, lower the drop floor and turn the PTO on and off to work the plug through.

   NOTE: It is not recommended to disengage the knives since the knives automatically retract when the floor is fully lowered.

3. Raise and lower the pickup a couple times by moving the tractor selector valve.
4. If the baler does not clear, shut off the PTO and the tractor.
5. If the baler clears, return the pickup to operating height and continue baling.

DP99999,0000E29-19-29SEP17

Unplug Baler Under Power

If the baler is equipped with the variable (soft) core option and the bale diameter displayed on the monitor is less than 170 mm (67 in), unplugging can be done from the tractor station. See Baler with Variable Core Option for procedure.

MegaWide is a trademark of Deere & Company

Baler Without Variable Core Option

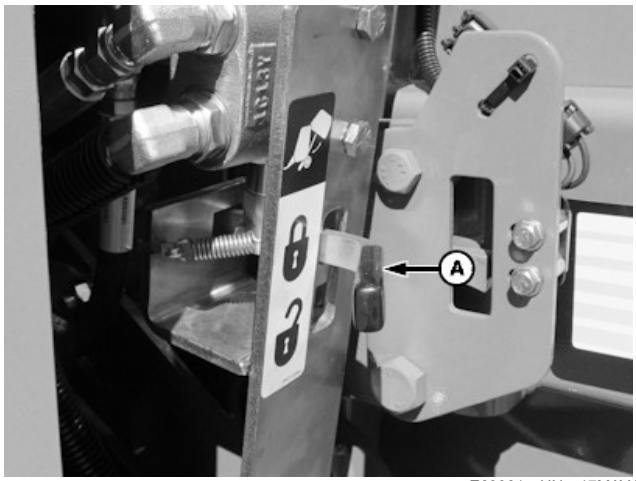

E69961—UN—17MAY13

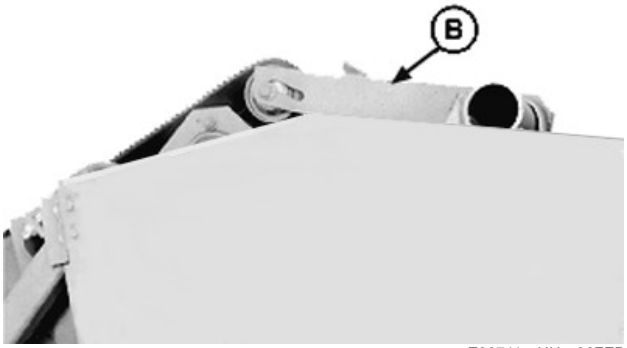

E39711—UN—06FEB96

A—Locked Position
B—Upper Arm

1. Shut off tractor.
2. Place gate lock valve in locked position (A).
3. Raise belt tension arm with the tractor selector valve until upper arm (B) starts to move.
4. Engage PTO.

IMPORTANT: If belts slip, lower belt tension arm. Do not prolong belt slippage as damage can occur to the baler.

5. If belts slip, lower belt tension arm.
6. If the baler clears, unlock gate lock valve and continue baling.
7. If the baler does not clear, unlock gate, discharge bale, and shut off tractor.
8. With gate open, put gate lock valve in locked position (A).
9. Lower pickup and unplug manually.
10. Raise pickup to operating height.
11. Unlock gate lock valve, lower gate, and continue baling.

Baler with Variable Core Option

NOTE: If the displayed bale size on the monitor is greater than 170 mm (67 in) this procedure cannot be used.

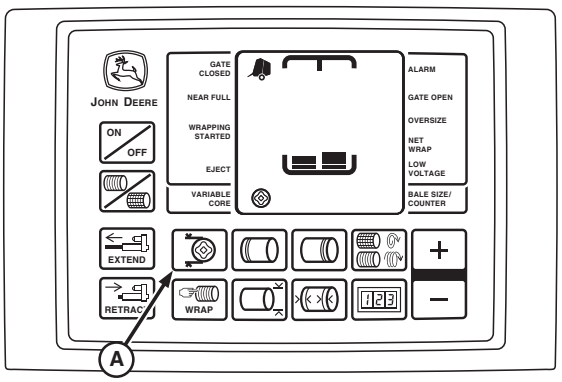

E52457—UN—18JUN03

A—Variable Core Engage Button

NOTE: Maximum variable core diameter setting is 100 mm (4 in) below the preset bale size. If necessary, the preset bale size can be increased to set the variable core diameter greater than the displayed size.

1. Set the variable core diameter at least 8 cm (3 in) above the displayed bale size.
2. Press the variable core engage button (A).
3. Engage the PTO slowly to unplug.
4. If the baler does not clear, discharge the bale and shut off the tractor.
5. With the gate open, put the gate lock valve in locked position.
6. Lower the pickup and unplug the baler manually.
7. Raise the pickup to operating height.
8. Reset variable core diameter and bale diameter to the original settings and continue baling.

DP99999,0000D19-19-24APR17

BaleTrak™ Pro and Plus Monitor-Controller System Introduction

E84051—UN—11AUG17
BaleTrak™ Pro Monitor-Controller

E84050—UN—11AUG17
BaleTrak™ Plus Monitor-Controller

The BaleTrak™ Pro or Plus system provides accurate and useful information to help the operator make the best bales possible.

The BaleTrak™ Pro system is provided with balers equipped with the MegaWide™ Plus and Regular pickups. The BaleTrak™ Plus system is provided with balers equipped with the MegaWide™ HC2 feed system.

The operator can adjust most control settings from the tractor seat without inconvenience or delays. By pushing a single button, twine arms can be extended or extracted, or the auto wrap cycle can be initiated.

The BaleTrak™ Pro or Plus system is factory preset, functional, and ready to use. To become familiar with the settings before adjusting or resetting them, operate the baler briefly with factory settings. The system retains the settings when the power is shut off.

NOTE: The monitor powers off after approximately 30 minutes of inactivity.

BaleTrak is a trademark of Deere & Company
MegaWide is a trademark of Deere & Company

The system can be used to troubleshoot baler malfunctions and gives error code messages during malfunctions. Convenient channels are available to ensure correct baler settings and sensor adjustments.

The BaleTrak™ Pro or Plus system monitors or controls the following baling operations and conditions:

- Bale Diameter
- Bale Shape
- Automatic Twine Application
- Net Wrap (if equipped)
- Bale Eject
- Bale Count
- Gate Closed
- Slip Clutch Alert
- Variable Core Diameter (if equipped)
- Alarms
  - Gate Open
  - Oversize Bale
  - Low Tractor Voltage
  - Net Wrap Misfed or Miscut (if equipped)
  - Error Codes of System Malfunctions

DP99999,0000DF0-19-28AUG17

BaleTrak™ Pro and Plus Monitor-Controller Description

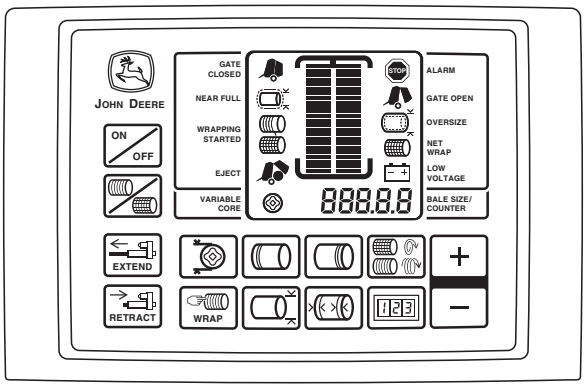

E84052—UN—11AUG17
BaleTrak™ Pro Monitor-Controller

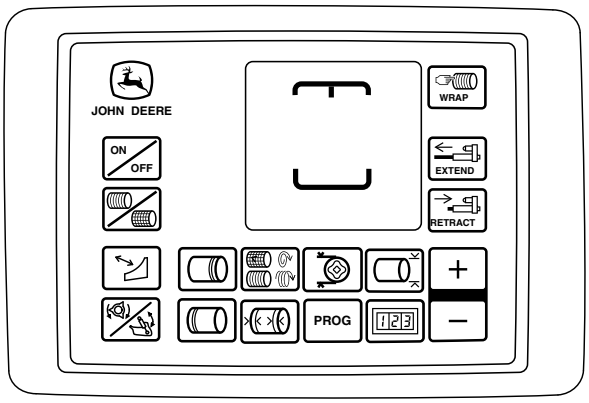

E84053—UN—11AUG17

BaleTrak™ Plus Monitor-Controller

The BaleTrak™ monitor-controller uses a liquid crystal display (LCD), a microprocessor, and switches or keys to monitor and control the baling and twine or net application operations. The following operating parameters can be set (programmed) into the control unit by the operator:

- Bale Diameter
- Twine Application:
  - Spacing
  - Number of End Wraps (both ends)
  - Twine End Wrap Distance (both ends)
  - Re-extension Wrap Distance
  - Cinch Wrap
  - Delay of Twine Eject
  - Dry Straw
- Net Wrap: Number of Wraps
- Variable Core Diameter (if equipped)
- Knife and Drop Floor Valve Activation (HC2 feed system only)

The monitor-controller is mounted on the tractor and is powered by the tractor's 12 V electrical system. When first turned on, the control unit performs a self-test to ensure that the system is ready to operate. The control unit then sends a brief communication signal to the wrap actuator (twine or net wrap) and waits for a reply before starting normal operations. A reply signal must be received or the control unit does not go into the operating mode and the STOP indicator lights.

The monitor-controller uses various sensors and switches to perform the following:

- The sensors are used for monitoring:
  - Bale Diameter
  - Bale Shape
  - PTO Speed (if equipped)
  - Pickup Speed (if equipped)
- The switches are used for monitoring:
  - Gate Position (Open or Closed)
  - Oversize Bale
  - Net Wrap (if equipped)
  - Knife Position (HC2 feed system, if equipped)
  - Drop Floor Position (HC2 feed system, if equipped)

To perform the twine or net application process, the control unit provides power to operate the bale wrap actuator (twine or optional net). The twine or net actuator is normally engaged automatically by the control unit. The twine or net actuator can also be engaged by the operator by pressing the wrap key.

DP99999,0000DE9-19-12SEP17

BaleTrak is a trademark of Deere & Company

BaleTrak™ Pro Monitor-Controller Keys and Switches

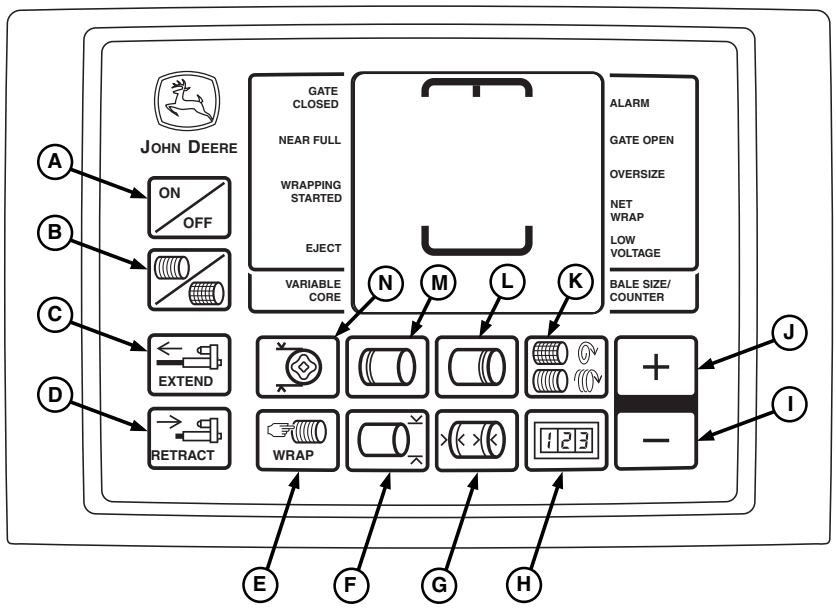

E52458—UN—19JUN03

A—Monitor ON-OFF Switch
B—Selector Switch (Twine or Net Mode[1])
C—Actuator Extend—Manual (Twine Mode Only[2])
D—Actuator Retract—Manual (Twine Mode Only[2])
E—Wrap Cycle—Manual Start
F—Bale Diameter
G—End Wrap Distance (Twine Only)
H—Bale Counters
I—Minus Key
J—Plus Key
K—Twine Spacing or Number of Net Wraps
L—Number of Right-Hand End Wraps (Twine Only)
M—Number of Left-Hand End Wraps (Twine Only)
N—Variable Core Diameter[1]

DP99999,0000DCF-19-25AUG17

[1] Optional equipment.
[2] Net actuator does not move when EXTEND or RETRACT keys are pressed in Net mode.

BaleTrak™ Plus Monitor-Controller Keys and Switches

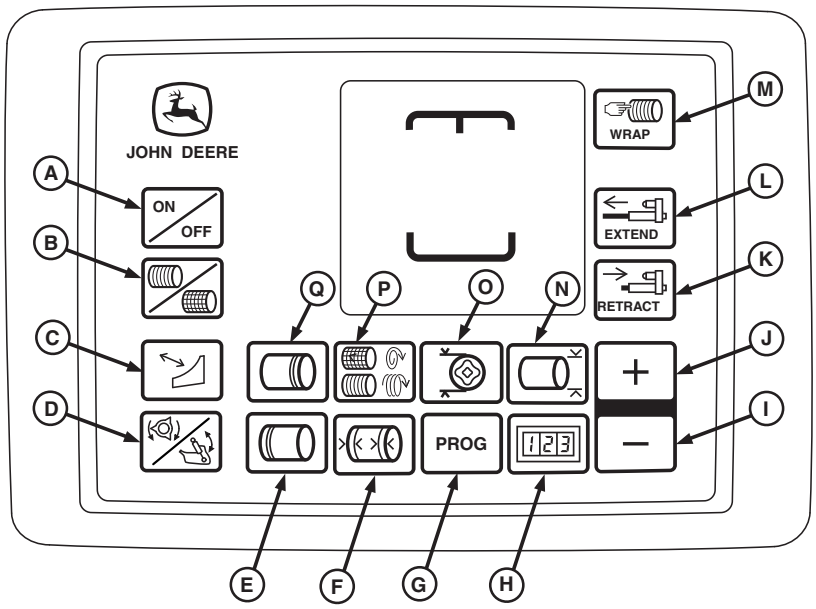

E83504—UN—16JUN17

A—Monitor ON-OFF Switch
B—Selector Switch (Twine or Net Mode[5])
C—Engage/Disengage Knives
D—Raise/Lower Drop Floor
E—Number of Left-Hand End Wraps (Twine Mode Only)
F—End Wrap Distance (Twine Mode Only)
G—Program
H—Bale Counters
I—Minus Key
J—Plus Key
K—Actuator Retract—Manual (Twine Mode Only[6])
L—Actuator Extend—Manual (Twine Mode Only[7])
M—Wrap Cycle—Manual Start
N—Bale Diameter
O—Variable Core Diameter[5]
P—Twine Spacing or Number of Net Wraps
Q—Number of Right-Hand End Wraps (Twine Mode Only)

DP99999,0000DD0-19-25AUG17

[5] *Optional equipment.*
[6] *Net actuator does not move when RETRACT key is pressed in the Net mode*
[7] *Net actuator does not move when EXTEND key is pressed in the Net mode*

BaleTrak™ Pro and Plus Monitor-Controller Displays and Indicators

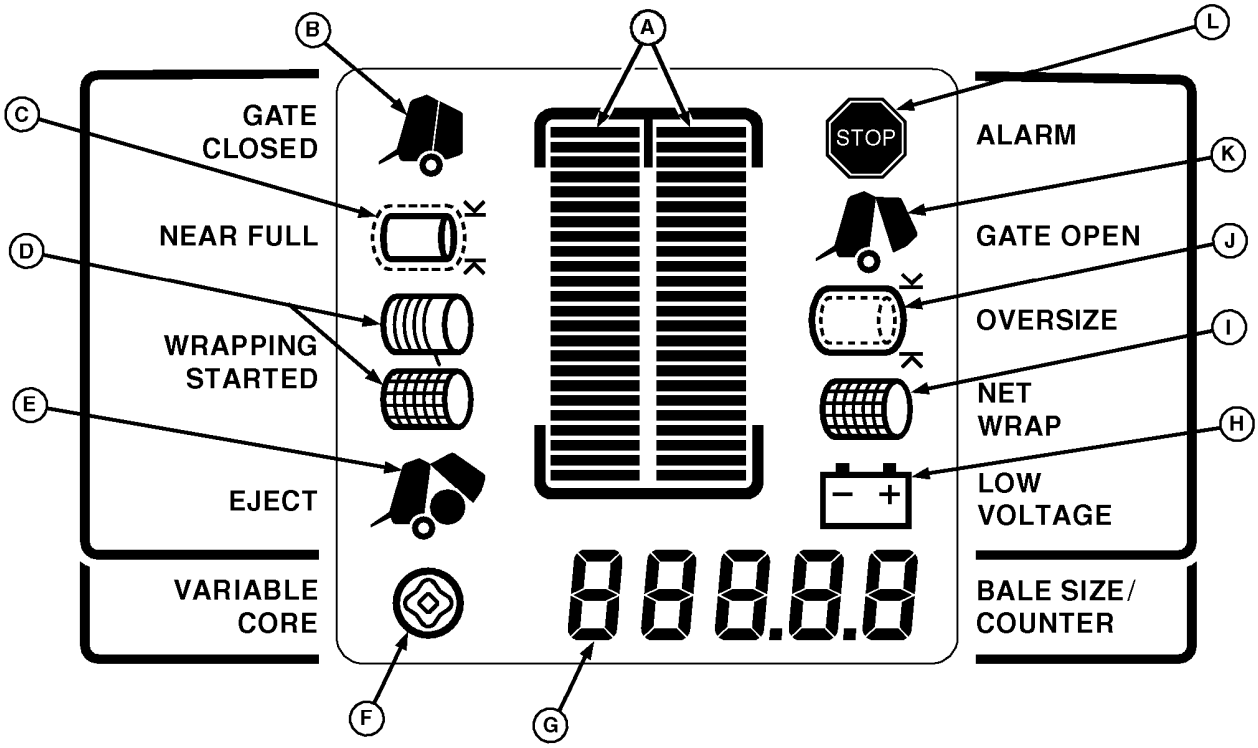

E47504—UN—07JAN00

A—Bale Shape Bars
B—Gate Closed
C—Near Full
D—Wrapping Started (Twine or Net)
E—Eject
F—Variable Core ON[9]
G—Digital Display (Bale Size or Counter)
H—Low Voltage Alarm
I—Net Wrap Alarm[10]
J—Oversize Alarm
K—Gate Open Alarm
L—Stop Indicator (Flashing or Steady)
M—Audible Alarm (Not Shown)

DP99999,0000DEE-19-25AUG17

[9] *Optional equipment.*
[10] *Optional equipment*

BaleTrak™ Pro and Plus Monitor-Controller Setup Values and Initial Settings

BALE DIAMETER

Readout Display Range	77—160 cm (30.5—63 in)
Diameter Adjustment Range	91—152 cm (36—60 in)
Diameter Initial Setting[a]	142 cm (56 in)
Near Full-Size Range	1—27 cm (0.5—10.0 in)
Near Full-Size Initial Setting[a]	11 cm (4.5 in)
Bale Shape Sensitivity Range	1 (slowest) — 5 (fastest)
Bale Shape Sensitivity Initial Setting[a]	3 (medium)

[a]*Settings revert to these values when the monitor-controller is reset. (See Reset BaleTrak™ Pro or Plus Monitor-Controller to Initial Settings [Channel 001] in this section.)*

TWINE WRAP

Spacing Range	2—26 cm (1—10 in)
Spacing Initial Setting[a]	10 cm (4 in)
Number of End Wraps Range	
Left-Hand End	0—5 Wraps
Right-hand End	0.5—5.0 Wraps
Number of End Wraps Initial Setting[a]	2 Wraps
Left-Hand, Right-Hand End Wrap Distance Range	8—26 cm (3—10 in)
End Wrap Distance Initial Setting (Right and Left-Hand)[a]	10 cm (4 in)
Re-extension Wrap Distance Range	OFF[a], 20, 40, 60 cm (8, 16, 24 in)
Cinch Wrap Initial Setting (From Left-Hand End)	OFF[a], 25 cm (10 in)
Dry Straw	OFF[a], ON
Delay of Twine Eject	0—10 Seconds
Delay of Twine Eject, Initial Setting	0 Seconds

[a]*Settings revert to these values when the monitor-controller is reset. (See Reset BaleTrak™ Pro or Plus Monitor-Controller to Initial Settings [Channel 001] in this section.)*

NET WRAP

Number of Wraps	1.5—10.0
Number of Wraps Initial Setting[a]	2
Time Delay Range (From Full-Size Bale Alert to Start of Net Wrap Cycle)	0—8 Seconds
Time Delay Initial Setting[a]	2 Seconds

[a]*Settings revert to these values when the monitor-controller is reset. (See Reset BaleTrak™ Pro or Plus Monitor-Controller to Initial Settings [Channel 001] in this section.)*

VARIABLE CORE DIAMETER

Diameter Adjustment Range	81—142 cm (32—56 in)[a]
Diameter Initial Setting[b]	91 cm (36 in)

[a]*10 cm (4 in) below size setting.*
[b]*Settings revert to these values when the monitor-controller is reset. (See Reset BaleTrak™ Pro or Plus Monitor-Controller to Initial Settings [Channel 001] in this section.)*

DP99999,0000DEA-19-22NOV17

BaleTrak™ Pro and Plus Monitor-Controller Customer and Setup Channels

Channel Descriptions

There are three types of channeled programs:

- Customer Channels (CH001—037)
- Setup Channels (CH201—208)
- Diagnostic Channels (CH301—312) (See your John Deere dealer or qualified service provider)

Customer Channels (CH001—037) are used to:

- Adjust bale shape bar display.
- Set near-full indicator set point.
- Reset monitor-controller to initial settings.
- Adjust the net wrap delay.
- Set bale shape display sensitivity.
- Access dry straw twine wrap program.
- Adjust bale diameter.
- Adjust twine wrap.
- Activate re-extension and cinch wrap program.
- Check positions of sensors and switches.
- Test twine or net actuators.
- Test LCD display.
- Test tractor voltage.
- Adjust delay of twine eject.
- Determine PTO and pickup drive speed.
- Set net cut-off point for B-Wrap.
- Set bale orientation for B-Wrap.

Setup Channels (CH201—208) are used to:

- Select baler model.
- Activate or deactivate twine arm.
- Activate or deactivate the surface wrap function.
- Activate or deactivate the variable core feature.
- Set up and calibrate slip clutch alert functions.

Customer Channels

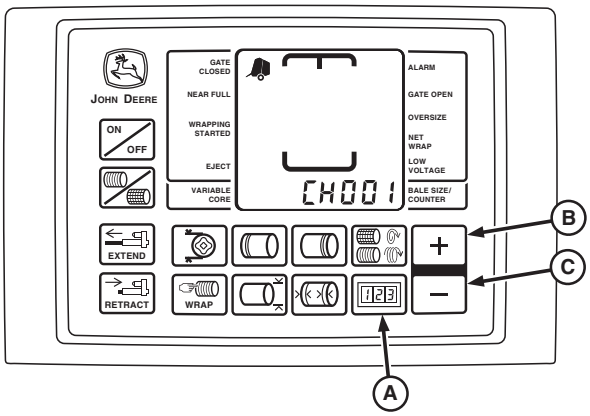

E84401—UN—31AUG17

BaleTrak™ Pro Monitor

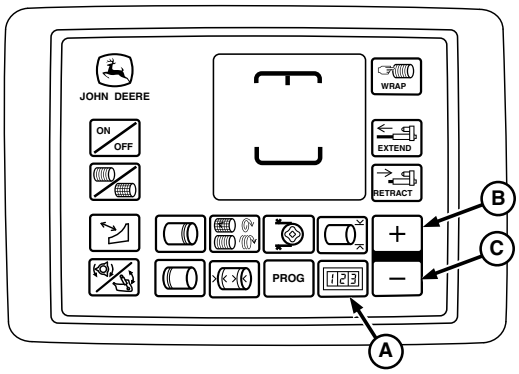

E84047—UN—10AUG17

BaleTrak™ Plus Monitor

A—COUNTER Key
B—PLUS Key
C—MINUS Key

To Enter Customer Channels:

1. Turn the tractor ignition key to the ON position. Do not start the tractor engine. Press and hold COUNTER key (A), while turning the monitor-controller ON.
2. Continue to hold COUNTER key (A) and press the PLUS key (B) until the desired channel appears in the digital display. To see the current value for this channel, release the keys.
3. To change the current setting in the selected channel, use the PLUS key (B) or the MINUS key (C).
4. To change channels, press and hold the COUNTER key and use the PLUS key or MINUS key to access other channels.
5. Turn the monitor-controller OFF to enter new settings into memory.
6. Turn the tractor ignition key to the OFF position and remove the key.

Setup Channels

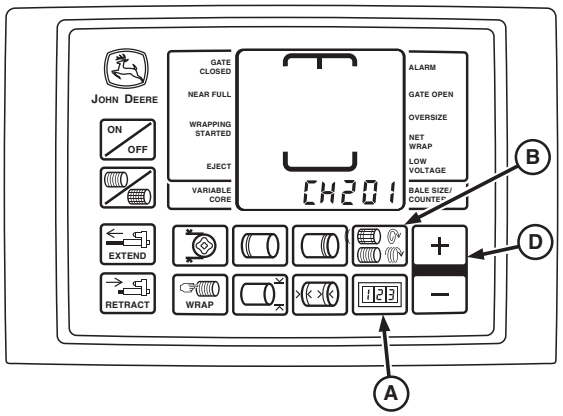

E84265—UN—28AUG17

BaleTrak™ Pro Monitor

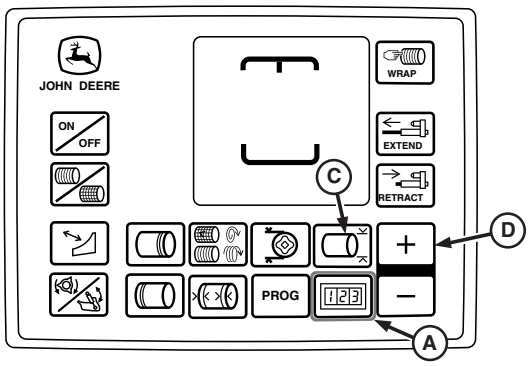

E84266—UN—28AUG17

BaleTrak™ Plus Monitor

A—COUNTER Key
B—NUMBER OF WRAPS Key
C—BALE DIAMETER Key
D—PLUS Key

To Enter Setup Channels:

1. Turn the tractor ignition key to the ON position. Do not start the tractor engine.
2. Access the Baler Model Channel 201 as follows:
   a. On the BaleTrak™ Pro Monitor, press and hold the COUNTER key (A) and the NUMBER OF WRAPS key (B) while turning the monitor-controller ON.
   b. On the BaleTrak™ Plus Monitor, press and hold the COUNTER key (A) and the BALE DIAMETER key (C) while turning the monitor-controller ON.
   c. Verify that CH201 is displayed on the monitor.
3. Release both keys. The baler model number is shown in the digital display. Verify that the number shown is correct. If the model number shown is not correct:
   a. Press the PLUS key (D) or the MINUS key until the correct model number is shown.
   b. Turn the monitor-controller OFF to enter the setting into memory.
   c. Turn the monitor-controller ON. The baler model appears for approximately 2 seconds. Verify that the model number is correct.
4. Press and hold the COUNTER key and press the PLUS key (D) until the desired channel is shown in the display. To see the current value for this channel, release the keys.
5. To change the current setting in the selected channel, use the PLUS key or the MINUS key.
6. If any settings are changed, turn the monitor-controller OFF to enter the new settings into memory.
7. Turn the tractor ignition key to the OFF position and remove the key.

DP99999,0000DE7-19-22NOV17

BaleTrak is a trademark of Deere & Company

BaleTrak™ Pro and Plus Monitor-Controller Channels

CUSTOMER and SETUP CHANNELS		
Channel Number	**Function**	**Remarks**
001	Return to Initial Settings	Display reads 050 for current settings. Hold the PLUS and MINUS keys simultaneously until 099 shows and then release to reset to initial settings.
002	Dry Straw Twine Wrap Program	Select OFF or ON
003	Re-extension Twine Application Program	Select OFF to disable. Select 8, 16, or 24 for desired spacing.
004	Cinch Wrap Twine Application Program	Select OFF or ON
005	Calibrate Bale Diameter Display	Calibration for the bale diameter sensor. Raise tension arm until all the way up and the gate is fully open. Press PLUS and MINUS keys at the same time to save calibration
006	Adjust Net Wrap Delay	Delay can be set between 0—8 seconds.
007	Calibrate Right-Hand Bale Shape Display	Use strap for holding bale shape sensor in the tensioned position then press PLUS and MINUS keys together to save the calibration
008	Set Measurement Units	Set to English (En) or Metric (Si) units using PLUS or MINUS key.
009	Calibrate Left-Hand Bale Shape Display	Use strap for holding bale shape sensor in the tensioned position then press PLUS and MINUS keys together to save the calibration
010	Set Near-Full Indicator Set Point	Set near full alarm between 0.5—10.0 inches from the selected bale diameter.
011	Adjust Bale Shape Display Sensitivity	Adjust bale shape display sensitivity from 1 (least sensitive) to 5 (fastest reaction).
012	Test Net Switch	Shows net switch state. 0 indicates closed circuit (normal, switch is mechanically open) and 1 indicates the net cutting with tone
013	Test Oversize Bale Switch	Shows oversize switch state. Reads 12 when switch is open and 00 with an audible tone when switch is depressed (oversize bale).
014	Test Right-Hand Gate Latch Switch	Not used on 460M and 560M balers.
015	Test Left-Hand Gate Latch Switch	Not used on 460M and 560M balers.
016	PTO Speed Sensor Output	Shows the measured PTO speed in rpm (rated is either 540 or 1000 depending on channel 204 setting)
017	Pickup Speed Sensor Output	Shows the measured pickup speed in rpm (rated is either 310 for non-precutter or 170 for precutter, set with channel 205)
018	Test Twine or Net Actuator Current	Allows the operator to use the extend/retract buttons for the net actuator. Displays current draw (1—8A moving, or 20—30A stalled)
019	Check Tractor Voltage	Displays supply voltage. 9.7 V is the minimum voltage
020	Test Liquid Crystal Display	Shows all of the segments on the LCD panel
021	Maximum Measured Actuator Current	Measures maximum actuator current read during the twine or net application cycle
022	Top Twine Sensor Pulley Test	Not used
023	Bottom Twine Sensor Pulley Test	Not used
024	Test Drop Floor Sensor	Drop floor sensor state. Reading of 00 indicates that drop floor is dropped. Reading of 12 (with tone) indicates that drop floor is up.
025	Test Knife Engage Sensor	Knife engage sensor state. Reading of 00 indicates that knives are not engaged. Reading of 12 (with tone) indicates that knives are engaged.
026	Flax Function	Not used
027	Bale Size Slope Tuning	Adjustment for the slope used in calculating the bale size. This setting is 2776 for 460M and 560M machines.
028	Field Calibration for Bale Size	In field bale size calibrations, create 2—3 bales of the same calculated size and measure the actual bale size. Create a bale of same size and leave in the chamber. Adjust channel value to match measured bale size. Press the PLUS and MINUS keys at the same time to save the calibration.
029	Twine Arm Calibration Value	Must extend the actuator with 2x4 on the right-hand side of the side sheet. Enter value displayed by holding both PLUS and MINUS keys.
030	Set Actuator Length	Sets length of the actuator.
031	Twine End Stop Adjustment	Not used, for the single twine arm.
032	Automatic Tying	Set automatic tying to ON or OFF.
033	Set Time of the Twine Eject	Sets amount of delay time between the finishing twine cycle and displaying the gate open.

CUSTOMER and SETUP CHANNELS		
Channel Number	**Function**	**Remarks**
034	B-Wrap Cut Position with Metal Strip	Sets the number of pulses counted after seeing the metal strip until cutting the B-Wrap NOTE: The value for this setting must be less than the setting in channel 035.
		(BaleTrak™ Pro: minimum is 16, maximum is 160, default is 126)
		(BaleTrak™ Plus: minimum is 9, maximum is 88, default is 69)
035	B-Wrap Orientation Adjustment	Sets the number of pulses counted before alerting the operator to turn off the PTO NOTE: The value for this setting must be greater than the setting in channel 034.
		(BaleTrak™ Pro: minimum is 58, maximum is 240, default is 182)
		(BaleTrak™ Plus: minimum is 31, maximum is 132, default is 101)
036	B-Wrap Optical Sensor Polarity	Polarity of the B-Wrap sensor (must be set to 0).
037	B-Wrap Metal Strip Detection Timeout	Time out number of pulses for detecting the metal strip.
		(BaleTrak™ Pro: minimum is 126, maximum is 164, default is 150)
		(BaleTrak™ Plus: minimum is 68, maximum is 90, default is 81)
201	Baler Model	Select the baler model being used (440E, 450E, 450M, 550M, 460M, and 560M).
202	Activate/Deactivate Twine	Enable twine option. Set to 0 to turn off the twine option and 1 to turn on the twine option.
203	Activate/Deactivate Net Wrap	Enables net option. Set to 0 to turn off the net option and 1 to turn on the net option.
204	PTO Speed Sensor Setup	Enables speed compensation for tying. Set to 0 to turn feature off. Set to 540 or 1000, corresponding to proper speed for this machine.
205	Pickup Speed Sensor Setup	Enables slip clutch detection. Set to 0 to turn feature off.
		BaleTrak™ Pro: Set to 310 for drive roll speed sensing; channel 209 is forced to 0.
		BaleTrak™ Plus: Set to 170 for rotor shaft speed sensing; channel 209 is forced to 1.
206	PTO Sensor Pulses Per Revolution	Sets the numbers of pulses the PTO speed sensor sees in a revolution. Set to 6.
207	Pickup Sensor Pulses Per Revolution	Sets the numbers of pulses the pickup speed sensor sees in a revolution. Set to 6.
208	Activate/Deactivate Variable Core Feature	Enables the variable core feature. Set to 0 to turn off the variable core and 1 to turn on the variable core.
209	Pickup Type	Set to 1 for a precutter machine and 0 for a non-precutter.
210	Enable Twine Pulley Sensors	Not used
211	Rotational Sensor Type	Indicates whether the old rotational sensors or the new rotational sensors are used.
Entering 100 Level Channels (Channels 0—37)	See Display 1 and Display 3	Enter 100 level channels by holding the Counter button and then powering on the monitor. To navigate to the desired channel, hold the Counter button and press the + or - buttons.
Entering 200 Level Channels (Channels 201—211)	See Display 2 and Display 4	BaleTrak™ Pro: Enter 200 level channels by holding both the Counter and the Number of Wraps buttons and then powering on the monitor.
		Bale Trak™ Plus: Enter 200 level channels by holding both the Counter and the Bale Diameter buttons and then powering on the monitor.
		To navigate to the desired channel, hold the Counter button and press the + or - button.

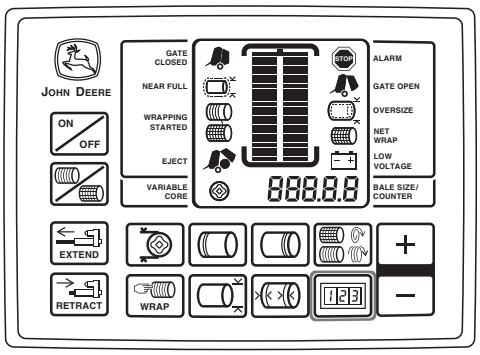

E84107—UN—18AUG17

Display 1—BaleTrak Pro Monitor

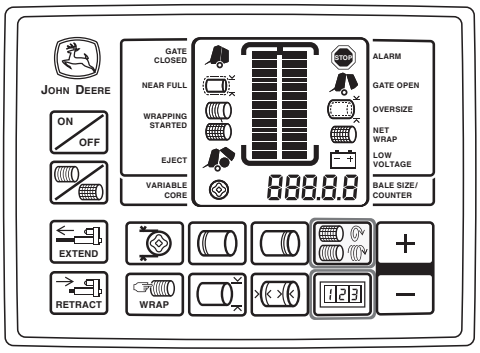

E84108—UN—18AUG17

Display 2--BaleTrak Pro Monitor

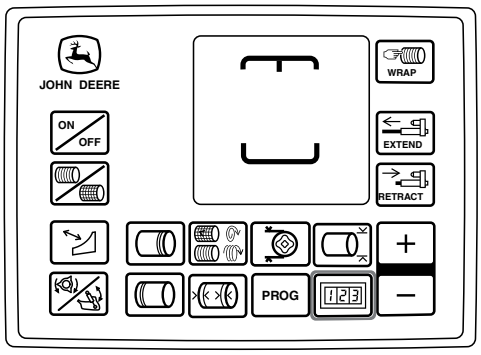

E84105—UN—18AUG17

Display 3--BaleTrak Plus Monitor

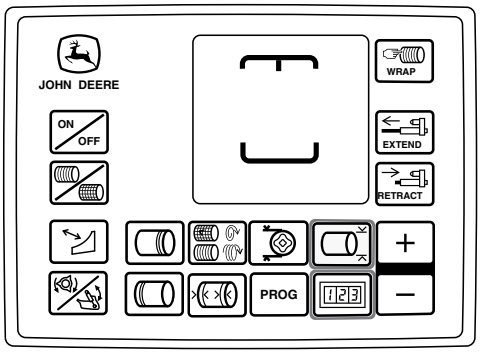

E84106—UN—18AUG17

Display4—BaleTrak Plus Monitor

DP99999,0000DE8-19-12SEP17

BaleTrak™ Pro and Plus Monitor-Controller Operation

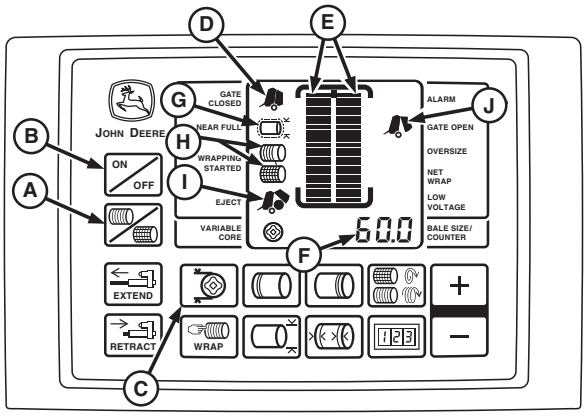

E84056—UN—11AUG17

BaleTrak™ Pro Monitor

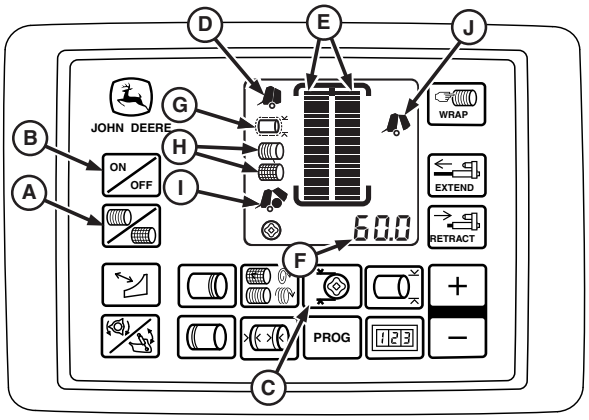

E84057—UN—29AUG17

BaleTrak™ Plus Monitor

A—Twine or Net Switch
B—On-Off Switch
C—Variable Core Key
D—Gate Closed Indicator
E—Bale Shape Bars
F—Digital Display
G—Near Full Indicator
H—Wrapping Started Indicator
I—Eject Indicator
J—Gate Open Indicator

Turn the tractor key to the ON position. Press the on-off switch (B) to turn on the monitor. The twine or net mode symbol is briefly displayed. Press and hold the twine or net switch (A) for 3 seconds to change modes. The icon for the selected mode is displayed and two audible beeps confirm that a change has been made.

If equipped with the variable core feature, press Variable Core key (C) to activate the feature. The indicator lights when the feature is on.

Gate Closed indicator (D) is on when the gate is latched and ready to bale.

Bale Shape Bars (E) indicate the bale shape. Bars in the green zone indicate tight belts and bars in the red zone

indicate slack belts. The best bale shape is when both bars are in the green zone. When the variable core feature is activated, the bars are low until the bale diameter grows larger than the variable core diameter setting in the monitor-controller.

Digital display (F) shows the bale diameter increasing in 1 cm (0.5 in) increments from 77—160 cm (30.5—63 in).

The Near Full indicator (G) flashes and beeps twice when the bale reaches a diameter 11 cm (4.5 in) smaller than the bale diameter setting. This indication gives a chance to fill the bale ends properly—bars in the green zone.

Wrapping Started indicator (H) lights and beeps, and net or twine application starts automatically when the bale reaches the diameter setting. Stop travel and maintain engine and rated PTO speed during the wrap and eject cycle. When wrapping with twine, observe the twine arm pointer and twine pulleys on the baler for proper operation. When the twine application is complete and the actuator returns to the home position, Eject indicator (I) lights and stays on until the gate is opened.

When applying net to the bale and net application and cut-off are complete, the Eject indicator (I) is displayed and stays on until the gate is opened.

When applying B-Wrap to the bale, the application and cut-off of material are completed automatically. The operator must disengage the PTO when indicated on the monitor to orient the bale correctly during ejection. (See Monitor Display for B-Wrap Bales is this section for more information.)

Confirm that twine has been cut by observing the twine pulleys. Back up (if not equipped with the bale ramp). Eject the bale using the hydraulic multi-function lever. Gate Open indicator (J) lights during normal ejection.

The Gate Open indicator goes out and the Gate Closed indicator comes on, indicating that normal operation can continue.

A wrap and gate open cycle adds one bale to both the total and the resettable bale counters. The resettable counter is automatically displayed for 8 seconds when a bale is added.

DP99999,0000DF1-19-29AUG17

BaleTrak™ Monitor-Controller Alarms

IMPORTANT: Continuing to operate with a GATE OPEN or OVERSIZE alarm results in baler damage.

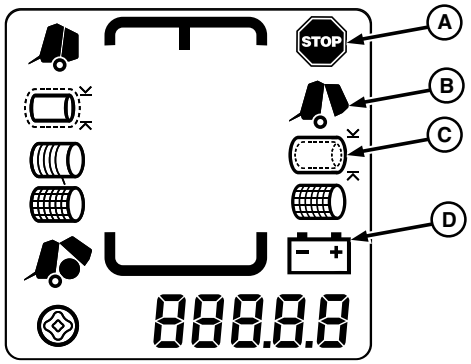

E84088—UN—09AUG17

Monitor-Controller Alarm Indicators

A—Stop Indicator
B—Gate Open Indicator
C—Oversize Bale Indicator
D—Net Wrap Indicator

Three conditions can activate the flashing **STOP** indicator (A) and audible alarm. If the **STOP** indicator flashes and the alarm sounds during normal operation, stop baling immediately. Take corrective action to silence the alarm and cancel visual indicators.

The following conditions will activate the flashing **STOP** indicator (A) and alarm:

- **GATE OPEN (B):** Gate is open. Continuing to operate can twist the gate and result in machine damage.
- **OVERSIZE (C):** Bale is above maximum allowable diameter. Continuing to operate with an oversize bale in the chamber can cause severe gate damage, roller breakage, and belt splice damage.
- **NET WRAP (D):** Net did not feed or the knife did not cut the net.

A flashing **STOP** indicator with no alarm can also appear at start-up if wiring to the twine or net actuator is disconnected or damaged.

DP99999,0000DED-19-09AUG17

Adjust Audible Alarm Volume

E52439—UN—16JUN03

A—Alarm Door

Open or close alarm door (A) to obtain desired volume.

DP99999,0000DEC-19-09AUG17

Enter Customer Channels (Channels 001—037)

NOTE: Refer to BaleTrak™ Pro and Plus Monitor-Controller Channels in this section for a list and description of the customer channels.

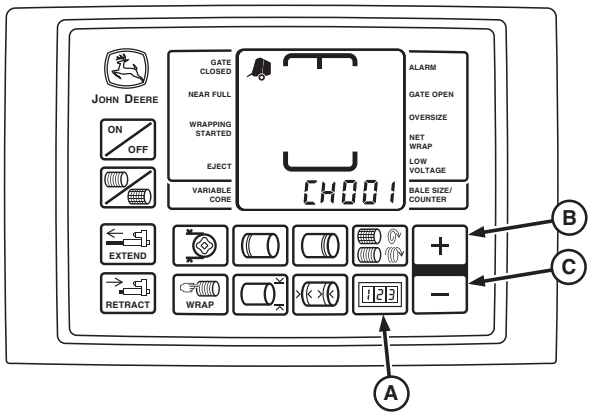

E84401—UN—31AUG17

BaleTrak™ Pro Monitor

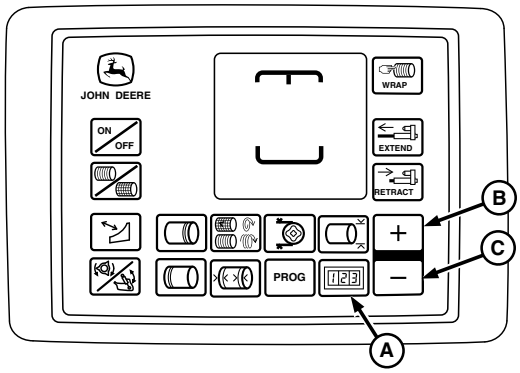

E84047—UN—10AUG17

BaleTrak™ Plus Monitor

A—COUNTER Key
B—PLUS Key
C—MINUS Key

To Enter Customer Channels:

1. Turn the tractor ignition key to the ON position. Do not start the tractor engine. Press and hold COUNTER key (A), while turning the monitor-controller ON.
2. Continue to hold COUNTER key (A) and press the PLUS key (B) until the desired channel appears in the digital display. Release the keys to see the current value for this channel.
3. To change the current setting in the selected channel, use the PLUS key (B) or the MINUS key (C).
4. To change channels, press and hold the COUNTER key and use the PLUS key or MINUS key to access other channels.
5. Turn the monitor-controller OFF to enter new settings into memory.
6. Turn the tractor ignition key to the OFF position and remove the key.

DP99999,0000E0D-19-31AUG17

Enter Setup Channels (Channels 201—211)

NOTE: Refer to BaleTrak™ Pro and Plus Monitor-Controller Channels in this section for a list and description of the setup channels.

BaleTrak is a trademark of Deere & Company

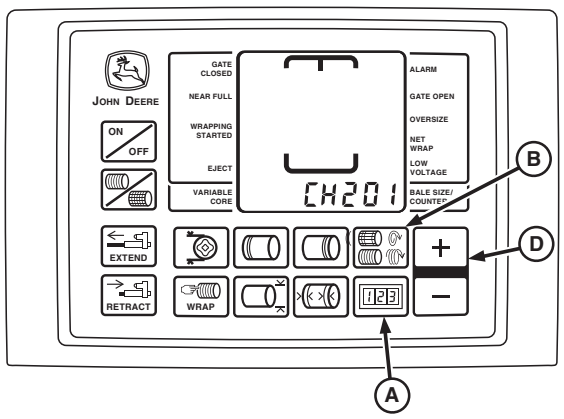

E84265—UN—28AUG17

BaleTrak™ Pro Monitor

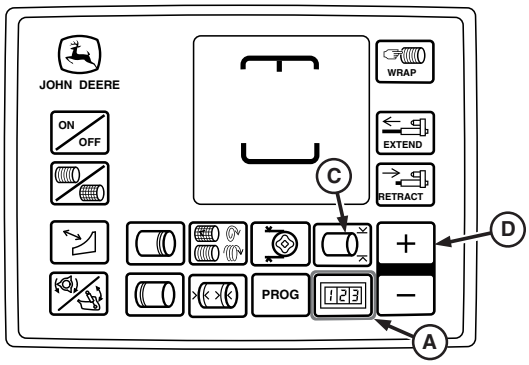

E84266—UN—28AUG17

BaleTrak™ Plus Monitor

A—COUNTER Key
B—NUMBER OF WRAPS Key
C—BALE DIAMETER Key
D—PLUS Key

To Enter Setup Channels:

1. Turn the tractor ignition key to the ON position. Do not start the tractor engine.
2. Access the Baler Model Channel 201 as follows:
   a. On the BaleTrak™ Pro Monitor, press and hold the COUNTER key (A) and the NUMBER OF WRAPS key (B) while turning the monitor-controller ON.
   b. On the BaleTrak™ Plus Monitor, press and hold the COUNTER key (A) and the BALE DIAMETER key (C) while turning the monitor-controller ON.
   c. Verify that CH201 is displayed on the monitor.
3. Release both keys. The baler model number is shown in the digital display. Verify that the number shown is correct. If the model number shown is not correct:
   a. Press the PLUS key (D) or the MINUS key until the correct model number is shown.
   b. Turn the monitor-controller OFF to enter the setting into memory.
   c. Turn the monitor-controller ON. The baler model appears for approximately 2 seconds. Verify that the model number is correct.
4. Press and hold the COUNTER key and press the PLUS key (D) until the desired channel is shown in the display. Release the keys to see the current value for this channel.
5. To change the current setting in the selected channel, use the PLUS key or the MINUS key.
6. If any settings are changed, turn the monitor-controller OFF to enter the new settings into memory.
7. Turn the tractor ignition key to the OFF position and remove the key.

DP99999,0000E0E-19-13SEP17

BaleTrak is a trademark of Deere & Company

Set Bale Diameter

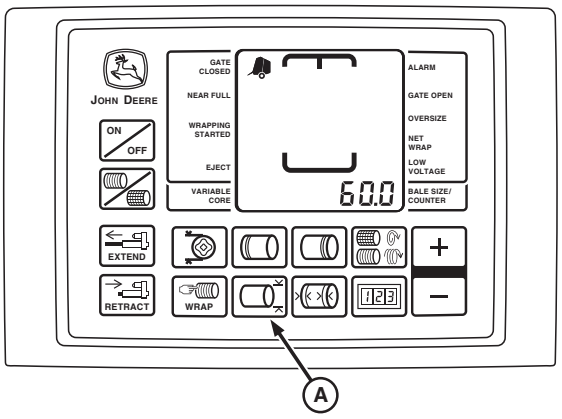

E52443—UN—02JUN08

BaleTrak™ Pro Monitor

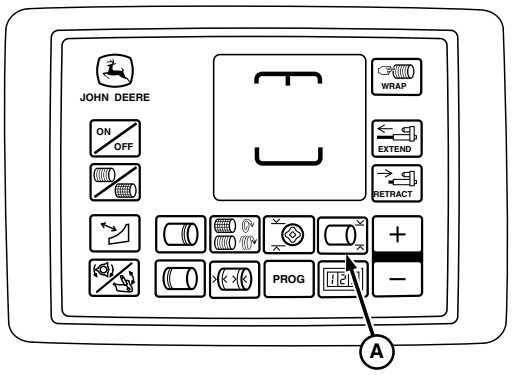

E84120—UN—28AUG17

BaleTrak™ Plus Monitor

A—Bale Diameter Key

The initial setting for bale diameter is 168 cm (66 in).

The bale diameter can be set from 81—183 cm (32—72 in) at 1 cm (0.5 in) increments.

- Press the BALE DIAMETER key (A) and the PLUS key to increase the diameter setting.
- Press the BALE DIAMETER key (A) and the MINUS key to decrease the diameter setting.

The optional variable core diameter setting must be at least 10 cm (4 in) less than the bale diameter setting.

The variable core setting need not be changed if the bale size is increased, unless desired.

DP99999,0000DD2-19-31AUG17

Adjust Variable Core Diameter (If Equipped)

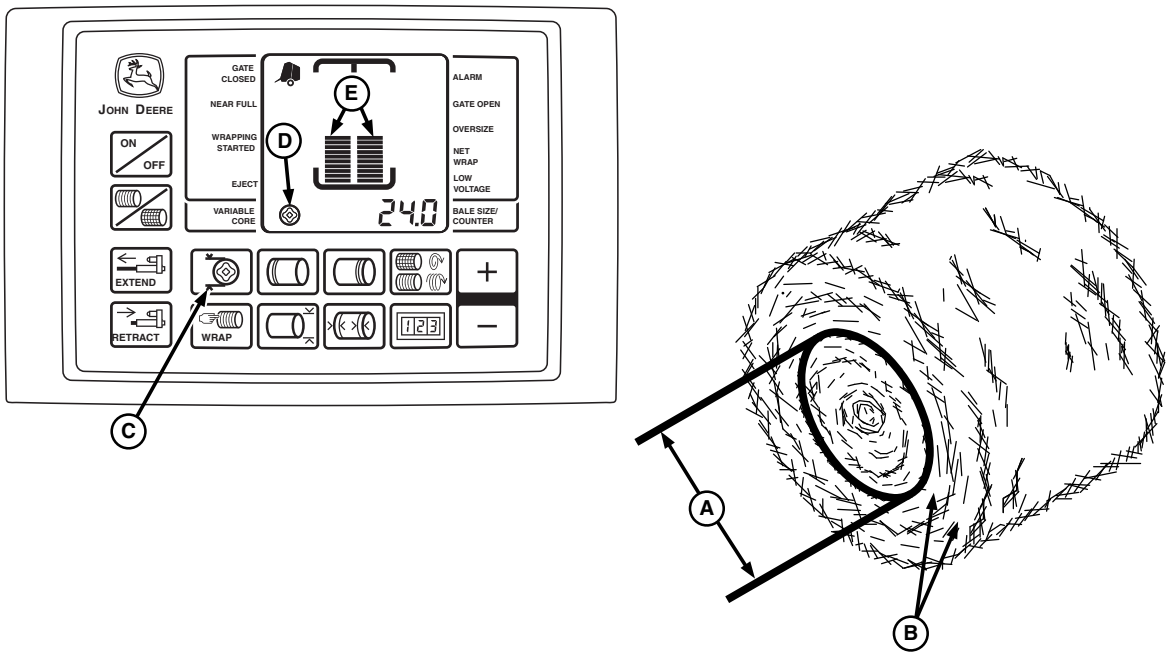

E52467—UN—19JUN03

A—Variable Core Diameter
B—High Density Outer Layers
C—VARIABLE CORE Key
D—Core ON Indicator
E—Bale Shape Bars

The variable core diameter (A) can be adjusted from 61 cm (24 in) up to 10 cm (4 in) less than the bale diameter setting in 1 cm (0.5 in) increments.

The initial setting for the variable core diameter is 91 cm (36 in).

The variable core diameter (A) can only be set at least 10 cm (4 in) less than the bale diameter setting so that tight, dense outer layers are formed. High density outer layers (B) helps the bale hold its shape when wrapped and helps repel water.

To set the variable core diameter (A):

- Depress and hold the VARIABLE CORE key (C).
- Press the PLUS or MINUS key until the desired setting appears in the digital display. Release the key to enter the setting into memory. This setting is used whenever the variable core feature is selected.

To use variable core feature:

- Depress the VARIABLE CORE key (C). Core indicator (D) indicates that the variable core feature is ON and stays on throughout the baling process.
- To check the variable core setting, depress the VARIABLE CORE key (C) to display the setting.

  Release and depress VARIABLE CORE key (C) to activate the variable core feature. Core indicator (D) is displayed on the monitor-controller when the feature is activated.
- To turn the variable core feature OFF, depress the VARIABLE CORE key (C) twice. The core indicator (D) goes off.
- The variable core feature remains in last operation mode when the monitor-controller is turned off and on.

NOTE: Bale shape bars (E) cannot reach maximum height when a variable core is being formed, due to lower bale forming pressure.

DP99999,0000DD4-19-09AUG17

Adjust Twine Tension

TS679—UN—28SEP89

CAUTION: To avoid injury or death by being pulled into the machine:

DO NOT attempt to feed twine into baler or pull twine from twine arms WHILE BALER IS RUNNING. The baler feeds material faster than you can release it.

Disengage PTO and shut off the tractor engine.

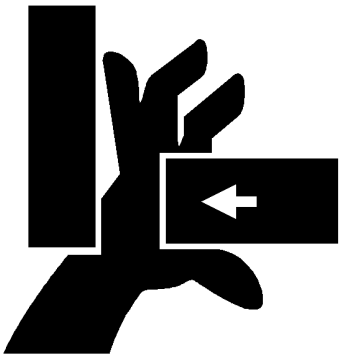

E47598—UN—07JAN00

CAUTION: Twine arms can move unexpectedly. Keep hands out of the twine arm path to avoid crushing. Turn off power BEFORE servicing or adjusting twine arms or twine cutter mechanism.

Stay out of the path of twine arms at all times when power to twine arms is ON.

NOTE: It can be necessary to adjust twine tension when changing to a different size twine or when changing from sisal to plastic.

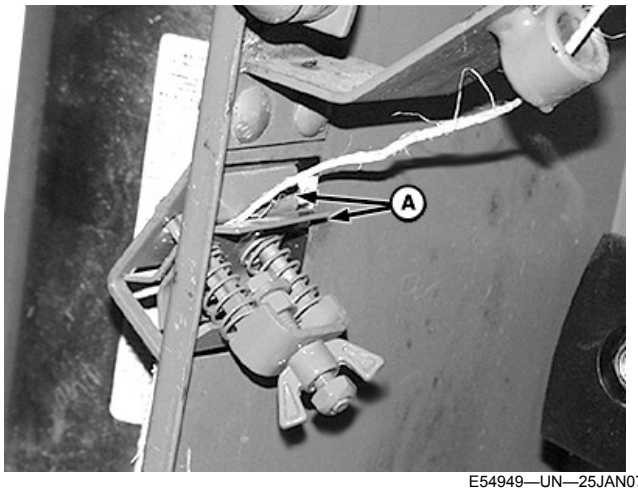

E54949—UN—25JAN07

Left-Hand Twine Tension Plate Shown

A—Tension Plates

The spring-loaded tension plates (A) control the twine tension.

Adjust twine tension while pulling twine perpendicular to end of twine tube.

- If twine tension is too high, the twine cannot start to wrap around the bale or twine can break.
- If twine tension is too loose, the twine cannot hold the bale adequately.

To adjust twine tension:

1. Lower the pickup to prevent twine arm from bending pickup teeth.
2. Move twine arms to home position. Make sure that twine is routed correctly. (See ROUTE TWINE in Preparing the Baler section.)

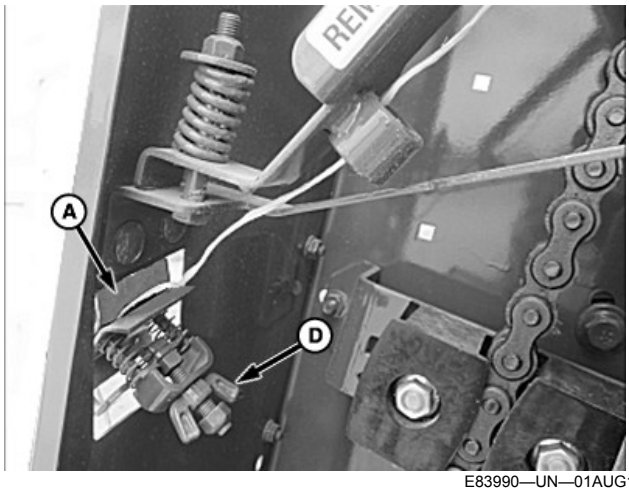

E83990—UN—01AUG17

Front Panel Twine Tension Plate (Left-Hand Side)

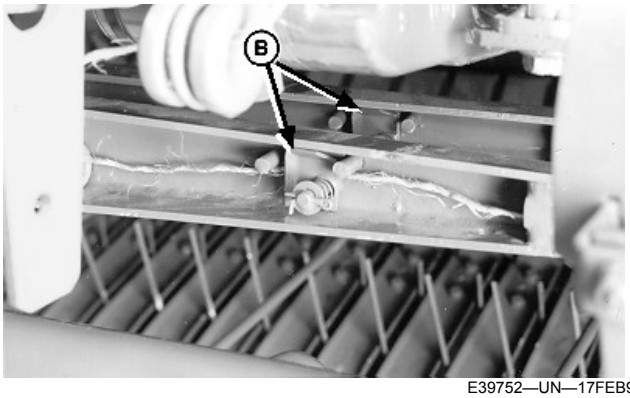

E39752—UN—17FEB96

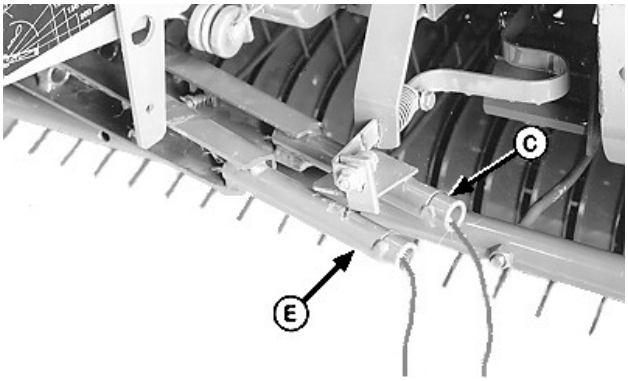

E39751—UN—19FEB96

A—Tension Plates (Front Panel)
B—Tension Plates (Twine Arms)
C—Rear Twine Arm
D—Wing Nut
E—Front Twine Arm

3. Remove crop buildup from tension plates (A) on front panels and from tension plates (B) on twine arms.
4. Attach a spring scale to the twine from the rear twine arm (C). Pull the twine perpendicular to the twine arm to check tension. If tension is not within specification:
   - Tighten wing nut (D) to increase tension on twine.
   - Loosen wing nut (D) to decrease tension on twine.

Specification

Twine Pull—Tension	22—45 N (5—10 lbf)

5. Repeat the preceding step to adjust twine tension for the front twine arm (E).
6. Cut the twine 305—381 mm (12—15 in) beyond the end of twine arms (C and E).

DP99999,0000D16-19-07SEP17

Twine Terms and Settings

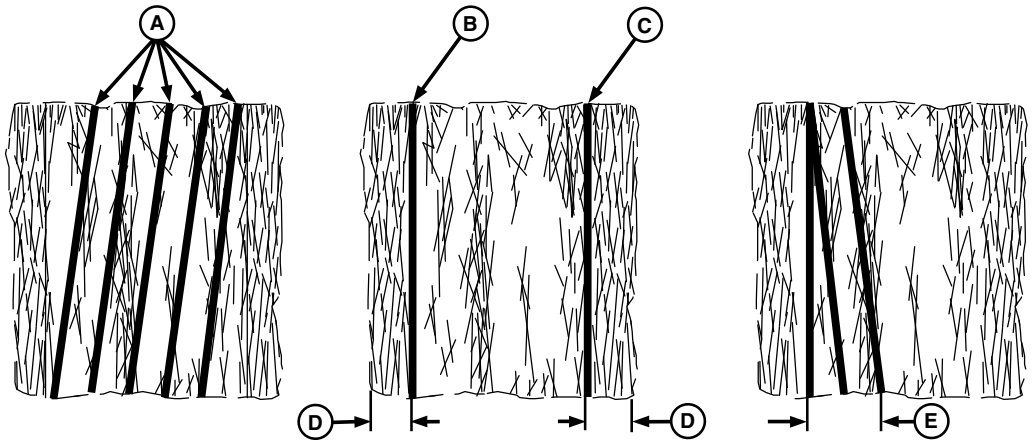

E84121—UN—28AUG17

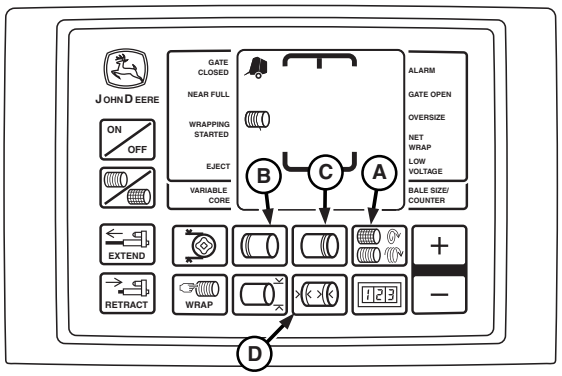

E84512—UN—08SEP17

BaleTrak™ Pro Monitor

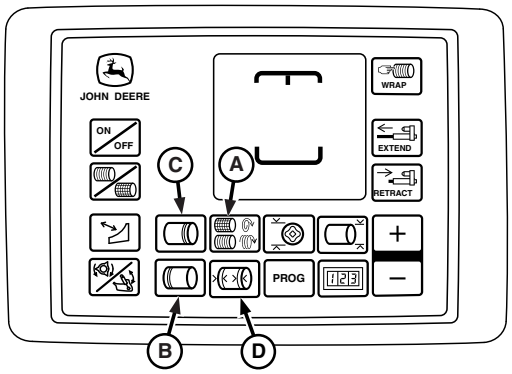

E84122—UN—28AUG17

BaleTrak™ Plus Monitor

A—Twine Spacing
B—Number of Left-Hand End Wraps
C—Number of Right-Hand End Wraps
D—Left-Hand and Right-Hand End Wrap Distance
E—Re-Extension or Cinch Wrap Distance

There are eight factors involved in properly placing twine on the bale. The factors are:

- Twine Spacing
- Number of Left-Hand End Wraps
- Number of Right-Hand End Wraps
- Left-Hand End Wrap Distance
- Right-Hand End Wrap Distance
- Re-Extension Wrap Distance
- Cinch Wrap
- Dry Straw

NOTE: The monitor-controller is programmed to apply approximate twine spacing in the center of the bale. Twine spacing decreases toward the ends of bale.

Twine Spacing (A) is the distance between twine wraps. Spacing is increased or decreased depending on how fast the twine arms move across the bale.

Mechanical twine arm spacings ranges are 5, 10, 15, and 20 cm (2, 4, 6, and 8 in).

Monitor-controller twine spacing range is between 2—26 cm (1—10 in) at 1.0 cm (0.5 in) increments. Initial setting is 10 cm (4 in).

To obtain uniform twine spacing on a bale, the setting for twine arm spacing and the monitor-controller setting for twine spacing must be the same.

Number of Left-Hand End Wraps (B) and Right-Hand End Wraps (C) controls how long the twine arms pause at the end of the bale to apply the set number of end wraps. End wrap setting ranges between 0.5—10 wraps. Initial setting is 2 wraps.

NOTE: The setting for the number of end wraps is approximate for each twine arm. With various settings of the adjustable twine guide, the twine from both arms are the same distance from the end of bale. The bale has twice the number of end wraps as indicated on the monitor-controller. (See SET TWINE END WRAP DISTANCE in this section.)

Left-Hand or Right-Hand (D) End Wrap Distance limits the twine arm travel to the outer ends of the bale. The end wrap distance can be set between 8—26 cm (3—10 in). An initial setting of 10 cm (4 in) has been set for both sides. The settings can be changed in 1.0 cm (0.5 in) increments.

NOTE: End wrap distances are an approximate indication where twine is placed on the bale.

To place twine the same distance from the edge on both ends, a slightly different setting can be required for each end.

Check setting of mechanical twine guide when revising monitor-controller settings.

Re-Extension Wrap Distance (E) is a feature that can help prevent twine unrolling. It places a wrap of twine back toward the middle of the bale from the left-hand end wrap location AFTER the set number of end wraps have been applied. Re-extension wrap settings are 20, 40, and 60 cm (8, 16, and 24 in). (See SET TWINE RE-EXTENSION in this section.)

Cinch Wrap is a feature that can decrease loose twine and improve twine spacing on the left-hand end of the bale. It places a wrap of twine approximately 25 cm (10 in) away from left-hand end wrap location PRIOR to applying the set number of end wraps. (See SET CINCH WRAP in this section.)

Dry Straw Twine Wrap is a feature to place twine across the full width of the bale quickly to reduce straw

from flaking off the bale during tying. Twine arms are programmed to quickly move to right, left, and back to the right side to resume normal tying cycle. Turn program ON or OFF. (See DRY STRAW TWINE WRAP PROGRAM in this section.)

DP99999,0000DAF-19-08SEP17

Set Twine Spacing

Set Mechanical Twine Arm Spacing

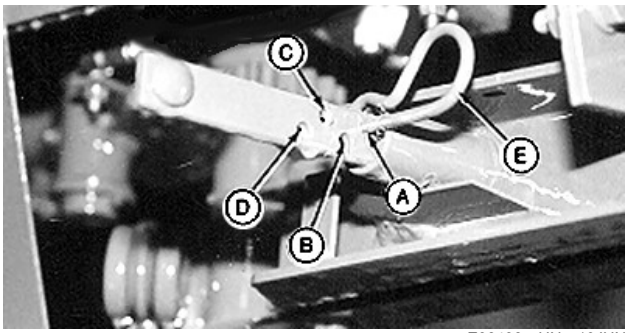

E38438—UN—19JUN96

A—5 cm (2 in) Twine Arm Spacing
B—10 cm (4 in) Twine Arm Spacing
C—15 cm (6 in) Twine Arm Spacing
D—20 cm (8 in) Twine Arm Spacing
E—Spring Pin

When the speed compensation program or the slip clutch alert system, if equipped, are enabled, the monitor-controller maintains consistent twine spacing for various bale diameters regardless of PTO speed. Without these features, mechanical spacing remains consistent, but spacing between the twine arms varies when operating at less than rated PTO speeds.

1. Set distance between the twine arms by installing spring pin (E) in the desired position:

Hole ID	Twine Arm Spacing
A	5 cm (2.0 in)
B	10 cm (4.0 in)
C	15 cm (6.0 in)
D	20 cm (8.0 in)

2. When operating at rated PTO speed, the twine spacing setting in the monitor-controller must be the same as the mechanical twine arm spacing.
3. When operating at less than rated PTO speed, set the twine spacing in the monitor-controller to a value less than the mechanical twine arm spacing. This setting can vary with different PTO speeds. Check the twine spacing on a bale and adjust the setting as necessary to get the desired twine spacing.

Set Monitor-Controller Twine Spacing

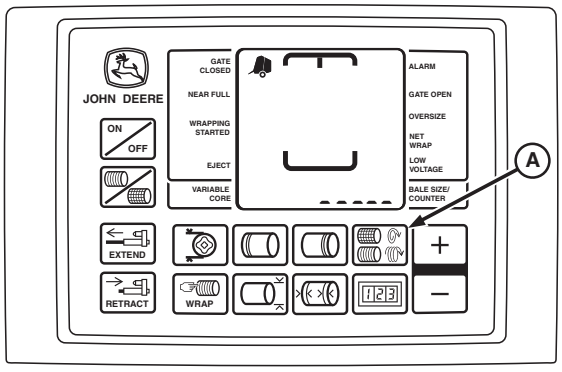

E84342—UN—30AUG17

BaleTrak™ Pro Monitor

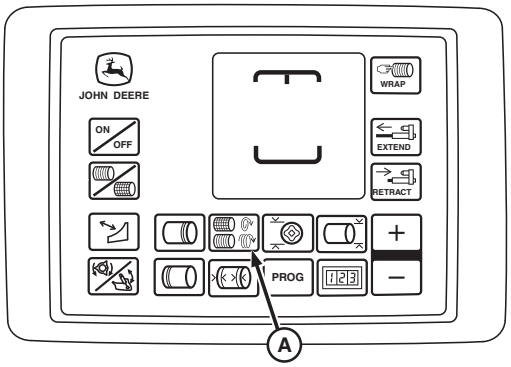

E84343—UN—30AUG17

BaleTrak™ Plus Monitor

A—TWINE SPACING Key

1. Turn the tractor ignition key to the ON position. Do not start the tractor engine. Turn the monitor-controller ON.
2. Press the TWINE SPACING key (A). Press the PLUS or MINUS keys until the desired twine spacing appears in the digital display. Use the following chart as a guideline. Monitor-controller settings can vary with crop conditions and between balers.

NOTE: When the speed compensation program or the slip clutch alert system, if equipped, are enabled, the monitor-controller maintains consistent twine spacing for various bale diameters regardless of PTO speed. Without these features, mechanical spacing remains consistent, but spacing between the twine arms varies when operating at less than rated PTO speeds.

Engine rpm	Mechanical Setting	Monitor-Controller Setting
Rated Speed	10 cm (4.0 in)	10 cm (4.0 in)
1800 rpm	10 cm (4.0 in)	9 cm (3.5 in)
1500 rpm	10 cm (4.0 in)	8 cm (3.0 in)
1300 rpm	10 cm (4.0 in)	6 cm (2.5 in)

3. Six seconds after the last adjustment, the setting is entered into memory.
4. Turn the monitor-controller OFF. Turn the tractor key to the OFF position and remove the key.

DP99999,0000E0A-19-22NOV17

Set Number of Twine End Wraps

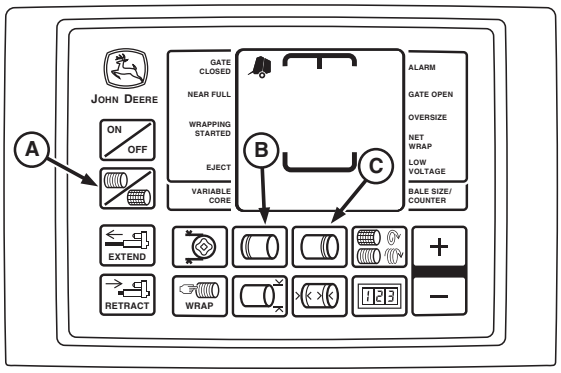

E52445—UN—02JUN08

BaleTrak™ Pro Monitor

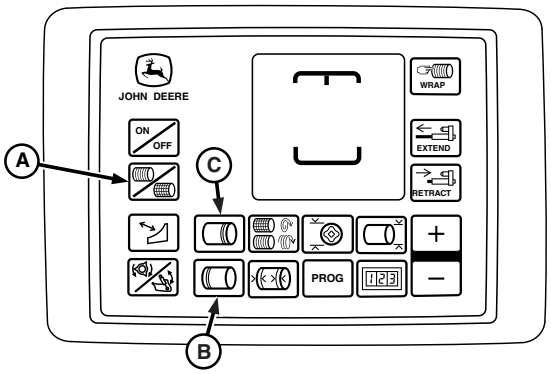

E84124—UN—28AUG17

BaleTrak™ Plus Monitor

A—Twine Symbol
B—Left-Hand End Wrap Key
C—Right-Hand End Wrap Key

Set the number of right-hand and left-hand end wraps as follows:

NOTE: The bale has twice the number of left-hand end wraps, as indicated on the monitor-controller, when the twine contacts the twine guide. (See SET TWINE END WRAP DISTANCE in this section.) The setting for the number of end wraps is approximate for each twine arm.

NOTE: If more end wraps are needed, increase the number on the monitor.

If fewer end wraps are needed, decrease the number on the monitor.

1. Turn the tractor ignition key to the ON position. Do not start the tractor engine. Turn the monitor-controller ON.

NOTE: The reference number displayed on the monitor for the desired number of end wraps is not the actual number of wraps on the end of the bale.

2. Press the LEFT-HAND END WRAP key (B). Press the PLUS or MINUS key until the desired number of end wraps (0.0—5) appears in the digital display.
3. After six seconds, the setting is entered into memory.
4. Press the RIGHT-HAND END WRAP key (C). Press the PLUS or MINUS key until the desired number of end wraps (0.5—5) appears in the digital display.
5. After six seconds, the setting is entered into memory.
6. Turn the monitor-controller OFF. Turn the tractor ignition key to the OFF position and remove the key.

NOTE: The slip clutch alert, if equipped and turned on, supplies the desired number of net wraps regardless of PTO speed.

DP99999,0000E06-19-26OCT17

Set Twine End Wrap Distance

Set Mechanical Twine Guide for End Wrap Distance

NOTE: Model 460M baler is equipped with left-hand twine guide only. (See Twine Terms and Settings in this section.)

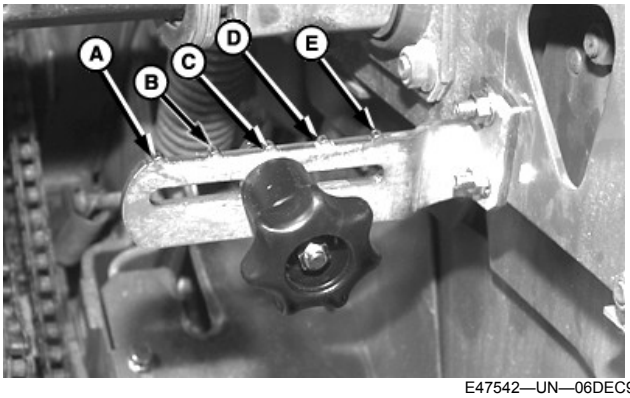

E47542—UN—06DEC99

Right-Hand Side Shown

A—Twine End Wrap Distance—89 mm (3.5 in)
B—Twine End Wrap Distance—114 mm (4.5 in)
C—Twine End Wrap Distance—140 mm (5.5 in)
D—Twine End Wrap Distance—165 mm (6.5 in)
E—Twine End Wrap Distance—190 mm (7.5 in)

The twine guide controls the twine wrap distance from the left-hand end of the bale. The twine wrap distance can be adjusted 89—190 mm (3.5—7.5 in) [A—E] at 25 mm (1 in) increments.

For most baling conditions, adjust the twine guide to position (B). This setting positions the twine end wraps approximately 114 mm (4.5 in) from the end of the bale.

For dry, slick crops such as straw, coastal Bermuda grass, or flax, increase twine wrap distance to prevent twine from falling off bale.

For crops such as alfalfa, that fill the bale ends well and produces square shoulders, decrease the twine end wrap distance to improve bale appearance and reduce bale spoilage.

To adjust the guide:

1. Loosen knob.
2. Move knob as follows:
   - Toward the baler side sheet to increase twine end wrap distance
   - Away from the baler side sheet to decrease twine end wrap distance
3. Tighten knob.

Set Right-Hand and Left-Hand End Wrap Distance

NOTE: Ensure that the mechanical twine guide controls the twine placement. Adjust the monitor-controller twine end wrap distance 1—3 cm (0.50—1.00 in) less than the mechanical twine guide setting. This adjustment increases the number of end wraps.

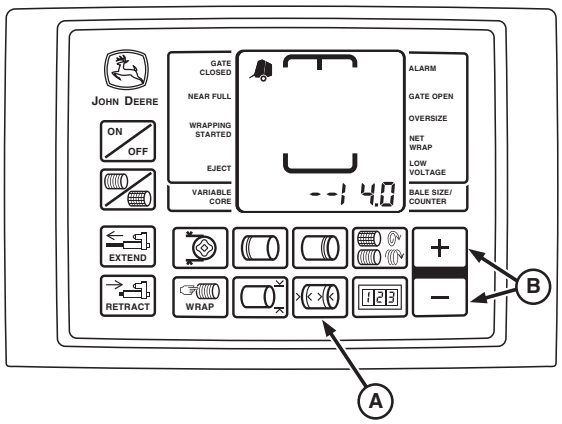

E52447—UN—29JUL03

BaleTrak™ Pro Monitor

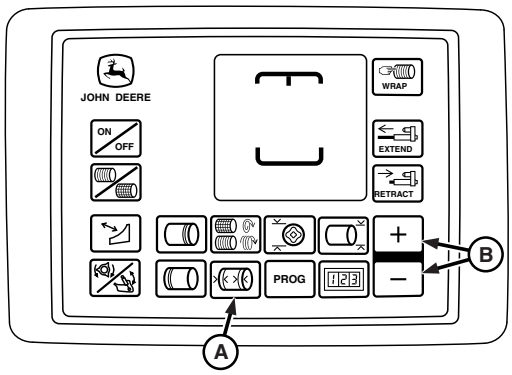

E84243—UN—28AUG17

BaleTrak™ Plus Monitor

A—End Wrap Distance Key
B—Adjustment Keys

1. Turn the tractor ignition key to the ON position. Do not start the tractor engine. Turn the monitor-controller ON.

NOTE: End wrap distances are approximate.

To place twine the same distance from the edge on both ends, a slightly different setting can be required for each end.

2. Press the END WRAP DISTANCE key (A). The right-hand end wrap distance is displayed as shown. Press the plus (+) or minus (-) adjustment key (B) until the desired distance of 8—26 cm (3—10 in) appears in the digital display.
3. Press the END WRAP DISTANCE key a second time to set the left-hand end wrap distance. Set the desired distance using the adjustment keys.

4. Turn the monitor-controller OFF. Turn the tractor ignition key to the OFF position and remove the key.

DP99999,0000DD5-19-27NOV17

Set Number of Net Wrap Layers (If Equipped)

NOTE: Net wrap layer settings range between 1.5—10 wrap layers (in 0.1 wrap increments), with an initial setting of 2.

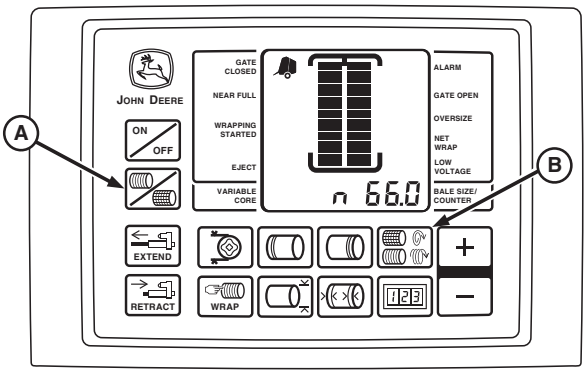

E52448—UN—18JUN03

BaleTrak™ Pro Monitor

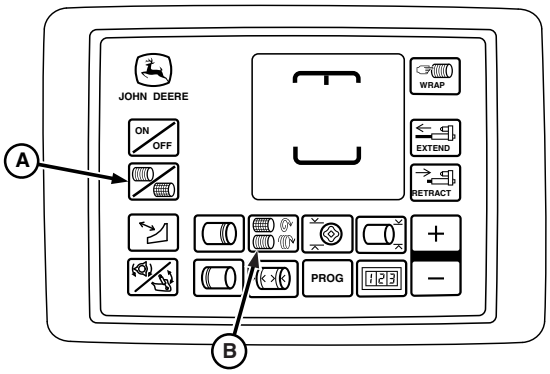

E84244—UN—28AUG17

BaleTrak™ Plus Monitor

A—NET Mode Selector Switch
B—NET WRAP Key

1. Turn the tractor ignition key to the ON position. Do not start tractor engine. Turn the monitor-controller ON.
2. To ensure that the monitor-controller is in the net mode, press the NET mode selector switch (A).
3. Press and hold the NET WRAP key (B). Press the PLUS or MINUS key until the desired number of wrap layers (1.5—10.0) appears in the digital display.
4. Turn the monitor-controller OFF. Turn the tractor ignition key to the OFF position and remove the key.

NOTE: Bales stored with fewer than two layers of net wrap can be damaged by handling or weather conditions

Add at least one additional layer of net wrap when baling using a precutter.

5. When applying net wrap material, different crops require a different number of net wrap layers for effective baling. The following minimum number of layers of net wrap are recommended:
   - 2 layers of net wrap for hay
   - 3 layers of net wrap for straw, wheat hay, and cereal grains
   - 4 layers of net wrap for corn stalks, sudex, hay grazer, and milo stalks

NOTE: If the baler is equipped with the slip clutch alert feature and it is turned on, the system applies the desired number of layers of net wrap, regardless of PTO speed. Thus, no change is needed on the monitor.

These guidelines apply only if the speed compensation program and slip clutch alert system are turned off.

If machine rpm is less than rated PTO speed, use the following chart as a guideline for the desired layers of net wrap.

NET WRAP CHART		
Engine rpm	Desired Number of Net Wrap Layers	Approximate Monitor Setting Needed
Rated PTO	2	2
	3	3
1800 rpm	2	2.4
	3	3.6
1500 rpm	2	2.9
	3	4.3
1300 rpm	2	3.3
	3	5.0

DP99999,0000E07-19-18SEP17

Net Switch Indicator

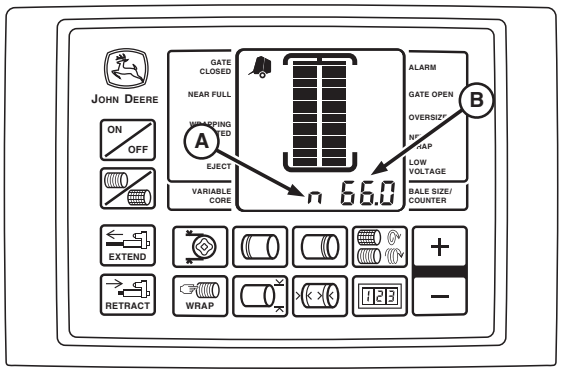

E52630—UN—20SEP06

A—n
B—Bale Size

In the net mode while applying net material, when the net switch is depressed, an **n** is displayed at the left end of the bale size value in the digital display. This symbol indicates that the net is feeding.

If the **n** is displayed during normal baling, stop immediately and investigate.

DP99999,0000E08-19-29AUG17

Wrapping Program Button (BaleTrak™ Plus Monitors Only)

The program button allows an operator to switch between different wrap settings depending on whether twine or net is selected. The five preset programs (1—5) provide the following settings for the selected wrapping mode:

Program Key						
		Twine				Net
Crop Type	Program	Number of Left-Hand End Wraps	Twine Spacing	Number of Right-Hand End Wraps	End Wrap Distance	Number of Net Wraps
Silage	1	4	5	4	8	2
Straw	2	3	10	3	10	3
Hay	3	2	5	2	8	2.5
Precut Silage	4	3	2	3	8	3
Precut Hay	5	2	15	2	8	2

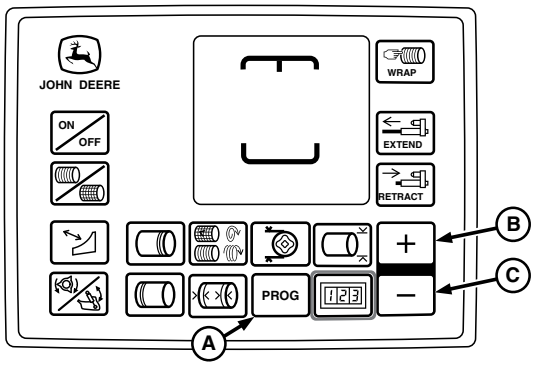

E84331—UN—06SEP17
BaleTrak Plus Monitor-Controller

A—PROG Key
B—PLUS Key
C—MINUS Key

Select the program number based off the desired twine or net settings shown in the table. To select the program desired, press the PROG key (A) and then the PLUS key (B) or MINUS key (C).

DP99999,0000E21-19-12SEP17

Monitor Display for B-Wrap Baling

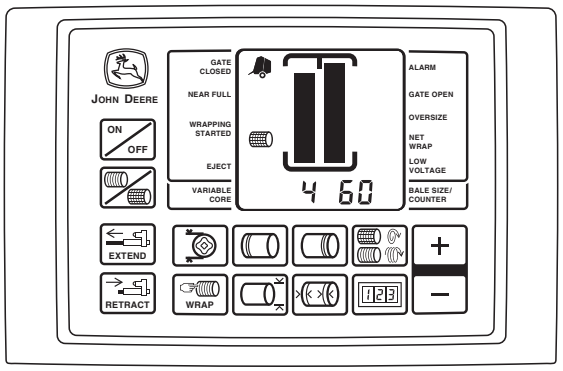

E83897—UN—02AUG17
BaleTrak™ Pro Monitor Display

1. The bale shape bars, near-full alarm, full-size alarm, and bale eject icons on the monitor display function as normal.
2. Stop forward movement (baling) when monitor signals a full bale (1524 mm [60 in]).
3. The B-wrap application cycle is automatic. The monitor displays a series of numbers showing that B-wrap material is feeding into the baler:
   - 1 — B-wrap actuator is starting to extend (changes quickly).
   - 2 — B-wrap is feeding.
   - 3 — Sensor sees the start of the metal tape (changes quickly).
   - 4 — Sensor sees the end of the metal tape.

- 5 — B-wrap actuator is starting to retract.
- 6 — B-wrap cut-off.
- 7 — Start of audible alarms for bale ejection.

4. After the B-wrap application cycle is complete, the monitor-controller sounds a series of four audible alarm beeps. The fourth beep is a longer tone.
   a. Disengage the PTO during the fourth alarm beep to position the bale for ejection.
   b. If the PTO is not disengaged during the first alarm cycle, the alarm cycle starts again.

   NOTE: The system eventually times out and shows error code 213.

5. The bale-eject icon on the monitor-controller display lights.
   a. Back up the baler.
   b. Eject the bale.
   c. Pull forward.
   d. Close the gate and engage the PTO.

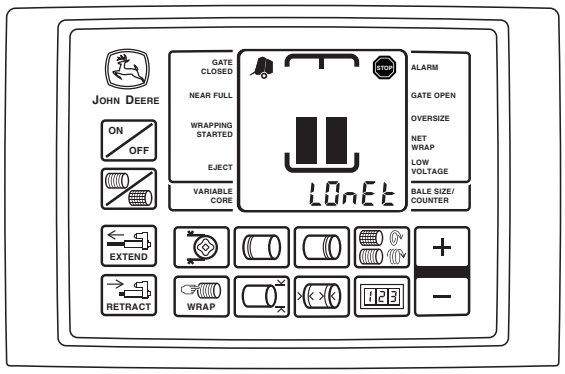

E69426—UN—25FEB13

6. **LOnEt** is displayed on the monitor when the last segment of material on the roll has been used.

   Stop the baler and load a new roll of material.

DP99999,0000E28-19-18SEP17

View and Reset Bale Counters

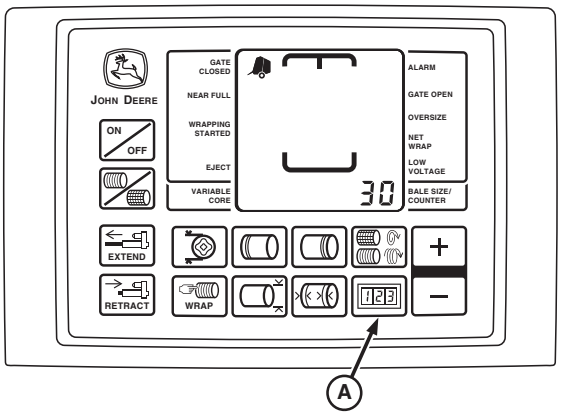

E52449—UN—02JUN08

BaleTrak™ Pro Monitor

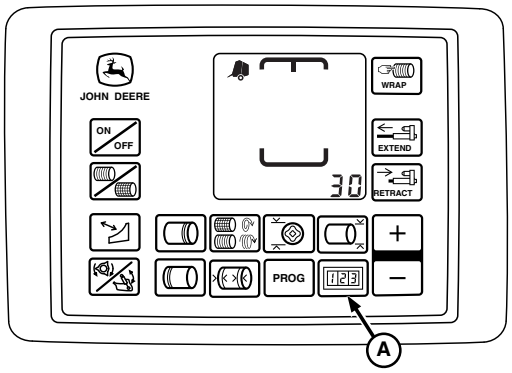

E84247—UN—29AUG17

BaleTrak™ Plus Monitor

A—COUNTER Key

BaleTrak™ monitor-controllers are equipped with two bale counters, RESETTABLE and TOTAL BALES.

The RESETTABLE counter can be cleared or modified as desired, while the TOTAL BALES counter cannot be reset or cleared. A wrapping cycle and gate latch open cycle adds one bale to both of the counters.

To view the counter memory:

NOTE: When key (A) is pressed, the display shows the bale count for 6 seconds, then reverts to the regular display.

1. Press the COUNTER key (A) once to display the RESETTABLE counter.
2. Press the COUNTER key twice to display the TOTAL BALES counter.

To clear the RESETTABLE counter memory:

1. Press the COUNTER key (A) once, then release.
2. While the count is displayed, press and hold the MINUS key until the display shows **0000**.

BaleTrak is a trademark of Deere & Company

NOTE: The bale count in the RESETTABLE counter can be increased to add fields together, or decreased to remove aborted bales (such as bales not wrapped correctly). Adding or removing bales from the RESETTABLE counter does not affect the TOTAL BALES counter.

To change the number of bales in the RESETTABLE counter:

1. Press and hold the COUNTER key (A).
2. While holding the COUNTER key, press the PLUS or MINUS key to change the bale count as desired.

DP99999,0000DD6-19-29AUG17

Manual Twine Actuator and Wrap Keys

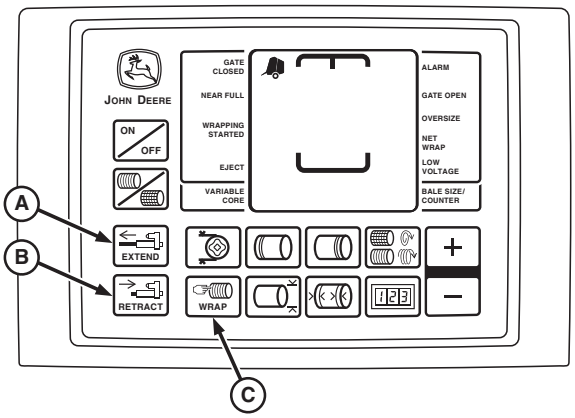

E52450—UN—02JUN08

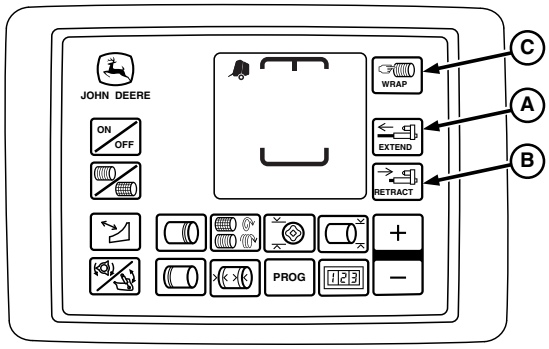

E84248—UN—29AUG17

BaleTrak™ Plus Monitor

A—EXTEND Key
B—RETRACT Key
C—WRAP Key

Press and release the WRAP key (C) to start a twine application or net wrap cycle manually before the bale reaches the preset diameter.

Once started, the bale wrapping cycle uses settings stored in the monitor-controller memory (number of wraps, end wraps, and end wrap distance). This feature is useful to wrap an undersized bale when finishing a field. The monitor-controller resumes fully automatic operation on the next bale.

The EXTEND (A) and RETRACT (B) keys are used only to operate the **twine actuator** manually. Pressing either key during an automatic wrap cycle cancels the cycle and moves the actuator as desired.

NOTE: The twine end wrap spacing distance is overridden when the EXTEND or RETRACT keys are used.

For example, if the right-hand end wrap distance is set at 13 cm (5 in) and the EXTEND key is pressed, the twine arm does not stop at the 13 cm (5 in) setting. It either contacts the right-hand side sheet, or the actuator is fully extended.

When using the EXTEND and RETRACT keys, the bale counter does not register additional bales.

DP99999,0000DBE-19-18SEP17

Reset BaleTrak™ Pro or Plus Monitor-Controller to Initial Settings (Channel 001)

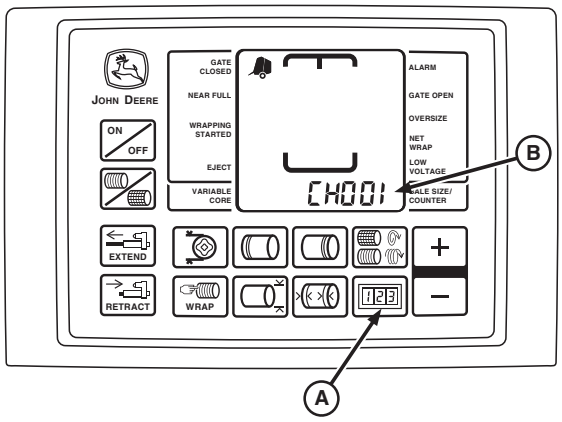

E52442—UN—18JUN03

A—COUNTER Key
B—CH 001 Displayed

All adjustable monitor-controller settings can be simultaneously reset to initial settings using the following procedure:

1. Turn the tractor ignition key to the ON position. Do not start the tractor engine.
2. Press and hold the COUNTER key (A) while turning on the monitor.
3. Release the key; the digital display must show **050**.
4. Simultaneously press and hold the PLUS and MINUS keys until the digital display changes from 050 to **099**, then release the keys.

NOTE: The display change is a visual indication that adjusted set points have reverted to initial settings. (See BaleTrak™ Pro and Plus Monitor-Controller Setup Values and Initial Settings, in this section, to see which settings are changed.)

5. Turn the monitor off to enter initial settings into memory.
   - If in English units, the reset values are in English.
   - If in metric units, the reset values are in metric.
6. Turn the tractor ignition key to the OFF position and remove the key.

DP99999,0000DD7-19-09AUG17

Dry Straw Twine Wrap Program (Channel 002)

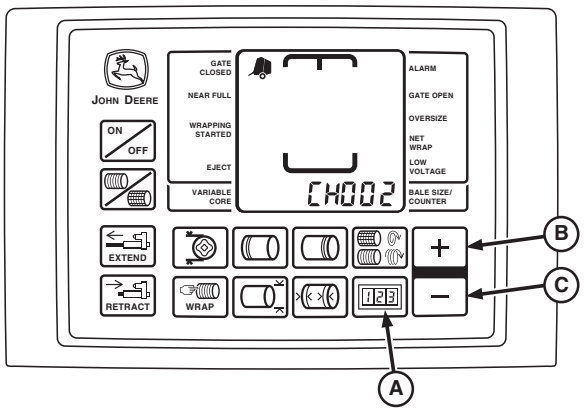

E52451—UN—18JUN03

BaleTrak™ Pro Monitor

A—COUNTER Key
B—PLUS Key
C—MINUS Key

When baling dry straw, it can be desirable to place twine across the full width of the bale to prevent straw from flaking off in the baler.

The dry straw twine program provides for full speed twine arm movement from right to left, after the normal full speed starting pass from left to right. The twine arms return to the right side, pause to place the set number of right-end wraps on the bale, and continue to apply twine as set in the monitor-controller.

To Access Program:

1. Turn the tractor ignition key to the ON position. Do not start the tractor engine.
2. Press and hold the COUNTER key (A) while turning the monitor-controller ON.
3. Continue to hold the COUNTER key and press the PLUS key (B) until **CH002** appears in the digital display.
4. Release the COUNTER key. **OFF** is displayed when the program is off.
5. Press the PLUS key (B) to turn on the program.
6. Turn the monitor-controller OFF to enter the setting into memory. This program stays active until **CH002** is accessed again and the MINUS key (C) is used to turn the program OFF.

DP99999,0000DD8-19-31AUG17

Set Twine Re-Extension (Channel 003)

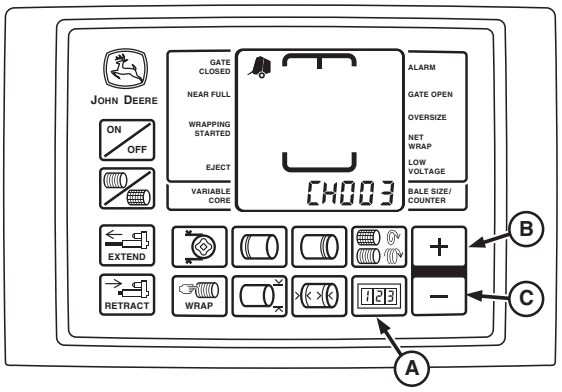

E52452—UN—18JUN03

BaleTrak™ Pro Monitor

A—COUNTER Key
B—PLUS Key
C—MINUS Key

Re-extension is a feature that can help prevent twine unrolling. It places a wrap of twine back toward the middle of the bale at a preset distance from the left-hand end wrap location. The additional twine wrap is applied after the set number of end wraps have been applied.

Setting	Distance From Left-Hand End Wrap
8	Approximately 20 cm (8 in)
16	Approximately 40 cm (16 in)
24	Approximately 60 cm (24 in)

To Access Special Wrap Program:

1. Turn the tractor ignition key to the ON position. Do not start the tractor engine.
2. Press and hold the COUNTER key (A) while turning the monitor-controller ON.
3. Continue to hold the COUNTER key and press the PLUS key (B) until **CH003** appears in the digital display.
4. Release the COUNTER key and view the current setting.

BaleTrak is a trademark of Deere & Company

- Press the PLUS key (B) to increase the setting.
- Press the MINUS key (C) to decrease the setting.

5. Turn the monitor-controller OFF to enter the setting into memory.
6. Turn the tractor ignition key to the OFF position and remove the key.

DP99999,0000DD9-19-31AUG17

Set Cinch Wrap (Channel 004)

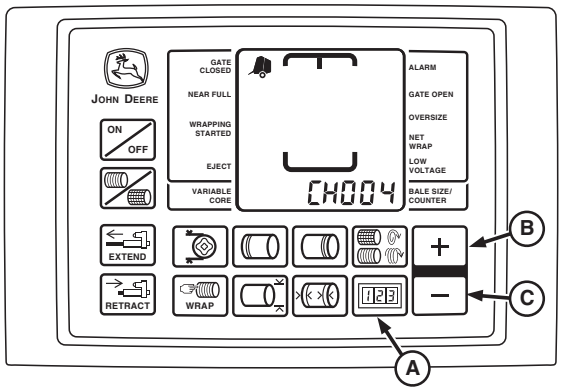

E52453—UN—18JUN03

A—COUNTER Key
B—PLUS Key
C—MINUS Key

Cinch Wrap is a feature that can decrease loose twine and improve twine spacing on the left-hand side of the bale. It places a wrap of twine approximately 25 cm (10 in.) away from the left-hand end wrap location **prior** to applying the set number of end wraps.

Setting	Feature
Cinch	Cinch Wrap ON

To Access Special Wrap Program:

1. Turn tractor key to ON position. Do not start tractor engine.
2. Press and hold COUNTER key (A). Turn monitor-controller ON.
3. Continue to hold COUNTER key (A) and press PLUS key (B) until **CH004** appears in digital display.
4. Release COUNTER key (A) and view current setting (see chart).
   - Press PLUS key (B) to turn ON.
   - Press MINUS key (C) to turn OFF.
5. Turn monitor-controller OFF to enter setting into memory.
6. Turn tractor key to OFF position. Remove key.

PP98408,0001036-19-11FEB13

Calibrate Bale Diameter Display (Channel 005)

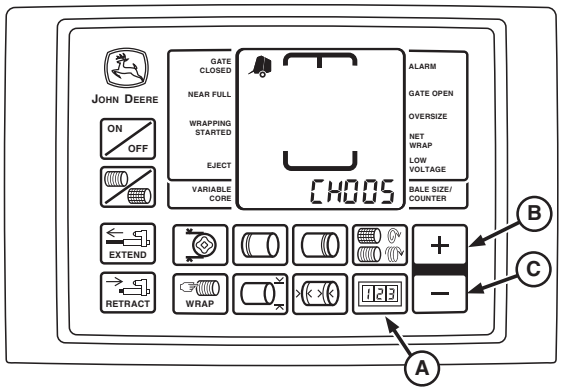

E84413—UN—01SEP17

BaleTrak™ Pro Monitor

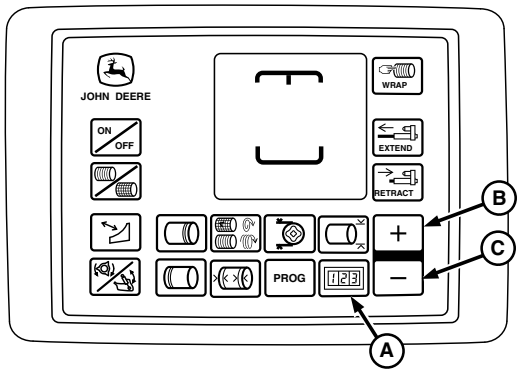

E84047—UN—10AUG17

BaleTrak™ Plus Monitor

A—COUNTER Key
B—PLUS Key
C—MINUS Key

1. Slowly raise the tension arm using the tractor SCV until the tension arm is all the way up and the gate is fully open.
2. Press and hold COUNTER key (A) and turn the monitor-controller ON.
3. Continue to hold the COUNTER key and press the PLUS key (B) until CH005 appears in the digital display.
4. Release the COUNTER key. The current bale diameter sensor value is shown.

NOTE: The value displayed when the channel is first entered is the current calibration of the bale diameter sensor. If the tension arm is moved, then the current sensor reading is shown.

5. Press the PLUS key (B) and the MINUS key (C) simultaneously to calibrate the bale diameter display to the current sensor position. An audible beep is heard to confirm that the calibration has been saved.

6. Lower the tension arm.
7. Check the calibration in the field and fine-tune with CH028 adjustment. (See Adjust Bale Diameter Display [Channel 028] in Operating the Baler section.)

DP99999,0000DA7-19-27NOV17

Adjust Net Wrap Delay (Channel 006)

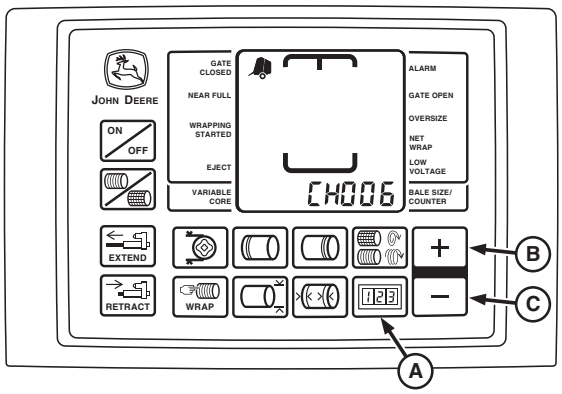

E52524—UN—26JUN03

A—COUNTER Key
B—PLUS Key
C—MINUS Key

The initial setting for net wrap delay is 2 seconds. This provides time to stop forward travel and avoid getting crop between layers of wrap.

If the operation requires additional delay before wrapping starts, such as operating on a hillside or baling at high ground speed, net wrap delay can be adjusted from 0—8 seconds.

To Change Setting:

1. Turn tractor key to ON position. Do not start tractor engine.
2. Press and hold COUNTER key (A) while turning monitor-controller ON.
3. Continue to hold COUNTER key and press PLUS key until **CH006** appears in digital display.
4. Release COUNTER key and view current setting.
5. Use PLUS and MINUS keys (B) and (C) to change net wrap delay to desired setting (0—8 seconds).
6. Turn monitor-controller OFF to enter setting into memory.
7. Turn tractor key to OFF position. Remove key.

PP98408,0001038-19-11FEB13

Adjust Bale Shape Sensor (Channel 007 and 009)

NOTE: The number of bale shape indicator bars displayed is 24.

Bale shape gauge strap (A) is available through your John Deere dealer.

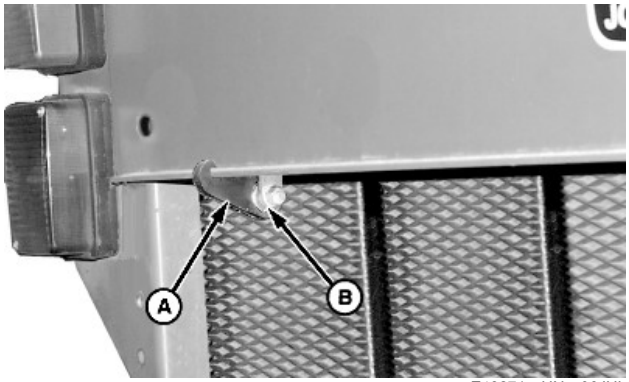

E48271—UN—06JUL00

Left-Hand Side Shown

A—Bale Shape Gauge Strap
B—Bearing

1. If bale shape gauge strap (A) is used:
   - Install strap (A) over roller bearing (B).
   - Attach the end of the strap over the baler frame cross-member. Make sure that the lip of the cross-member is seated on the strap.

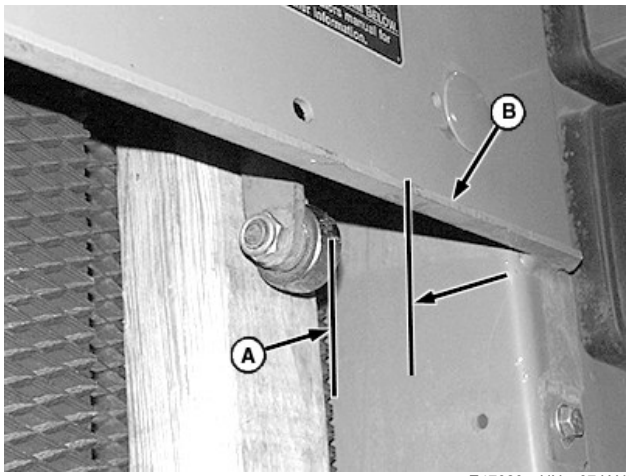

E47620—UN—07JAN00

Right-Hand Side Shown

A—Dimension
B—Rear Edge of Panel

NOTE: Use common dimensional lumber, if available. Actual measurement is 1-1/2 x 3-1/2 in.

2. If bale shape gauge strap is not used:
   - Put a board approximately 38 x 89 x 457 mm (2 x

4 x 18 in) between the roller bearing and the belt as shown.

- Position the board to hold the bale shape sender arm so that the rear of the roller bearing is 62 mm (2-7/16 in) (A) from the rear edge of panel (B).

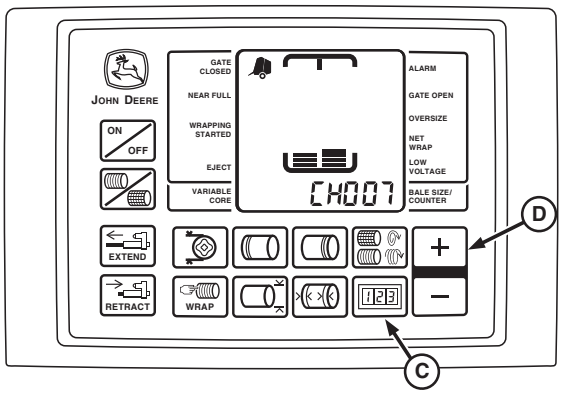

E52527—UN—26JUN03

C—COUNTER Key
D—PLUS Key

3. Press and hold COUNTER key (C) while turning the monitor-controller ON.
4. Continue to hold COUNTER key (C) and press PLUS key (D) until:
   - **CH007** is displayed to adjust the right side
   - **CH009** is displayed to adjust the left side
5. Release COUNTER key (C) to display the sensor value.
6. Press the + and - keys simultaneously to calibrate the bale shape sensor to this position. Hold both keys until the confirmation beep is heard.
7. Repeat the procedure to adjust the opposite side. Use the appropriate channel for adjustment.

DP99999,0000DA8-19-13SEP17

Set Monitor-Controller Display, Metric or English Units (Channel 008)

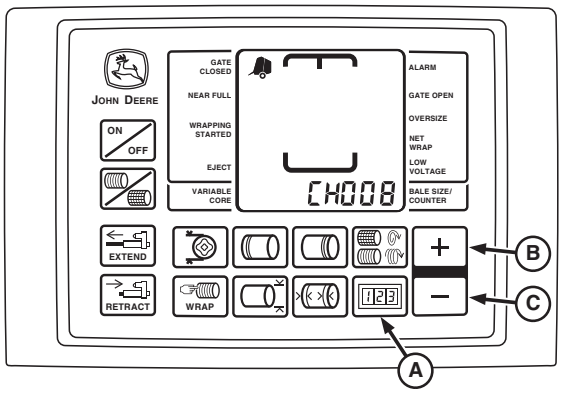

E52525—UN—26JUN03

A—COUNTER Key
B—PLUS Key
C—MINUS Key

NOTE: Monitor-controller is initially set to display in English units (inches; in.).

To Change Setting:

1. Turn tractor key to ON position. Do not start tractor engine.
2. Press and hold COUNTER key (A) while turning monitor-controller ON.
3. Continue to hold COUNTER key and press PLUS key (B) until **CH008** appears in digital display.
4. Release COUNTER key and view current setting; either **En** for English (inches) or **SI** for metric (centimeters, cm).
5. Use PLUS key (B) and MINUS key (C) to change to desired setting.
6. Turn monitor-controller OFF to enter setting into memory.
7. Turn tractor key to OFF position. Remove key.

PP98408,000103A-19-11FEB13

Set Near-Full Indicator Set Point (Channel 010)

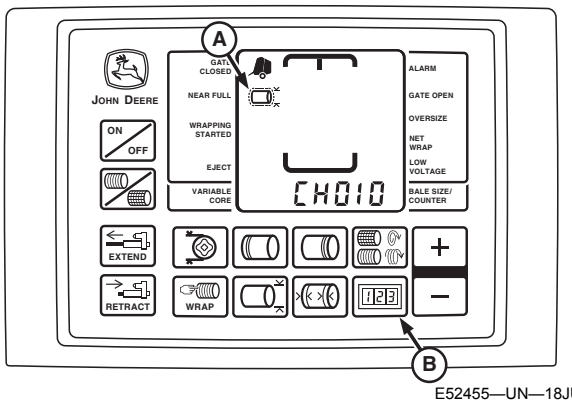

E52455—UN—18JUN03

A—Near-Full Indicator
B—COUNTER Key

The NEAR-FULL indicator (A) informs the operator when the bale has almost reached the desired size, based on the bale diameter setting. The point below the diameter setting, at which the indicator comes on, is adjustable between 1—27 cm (0.5—10.0 in), in 1 cm (0.5 in) increments.

The initial setting is 11 cm (4.5 in).

If the bale diameter is set at 183 cm (72 in) and the near-full distance is left at the initial setting of 11 cm (4.5 in), the near-full indicator comes on when the bale diameter reaches 172 cm (67.5 in).

If the bale diameter setting is changed, the near-full indicator set point need not be changed, unless a different near-full distance is desired.

To Change Near-Full Indicator Set Point:

1. Turn the tractor ignition key to the ON position. Do not start the tractor engine.
2. Press and hold the COUNTER key (B) while turning the monitor-controller ON.
3. Continue to hold the COUNTER key and press the PLUS key until **CH010** appears in digital display.
4. Release the COUNTER key and view current near full setting 1—27 cm (0.5—10.0 in).

NOTE: Increasing the near-full distance to the highest setting of 27 cm (10.0 in) provides the maximum time between NEAR-FULL indication and the wrapping cycle.

Decreasing the near full distance to the lowest setting of 1 cm (0.5 in) minimizes the time between the NEAR-FULL indication and the wrapping cycle.

5. Use the PLUS and MINUS keys to change the near-full distance to the desired setting.
6. Turn the monitor-controller OFF to enter the setting into memory.
7. Turn the tractor ignition key to the OFF position and remove the key.

DP99999,0000DDA-19-07AUG17

Set Bale Shape Sensitivity (Channel 011)

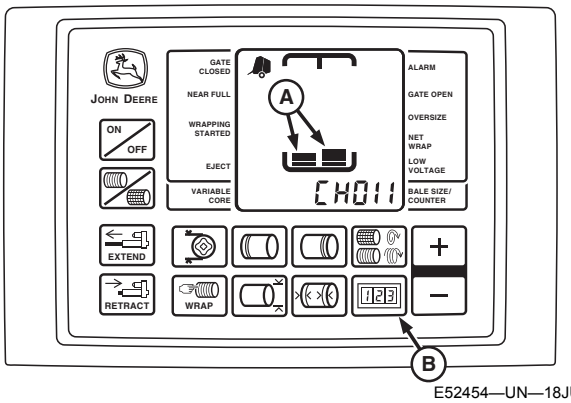

E52454—UN—18JUN03

A—Bale Shape Bars
B—COUNTER Key

The sensitivity of the bale shape bars (A) is factory set at 3 to dampen sensor signals. The reaction of bale shape bars to actual changes in the bale shape can be adjusted to be responsive or dampened.

Decreasing the setting makes the bale shape bars less responsive (slower to react) to bale shape changes.

Increasing the setting makes the bale shape bars responsive (fast to react) to crop intake. It can be desirable to increase bale shape sensitivity when rapidly forming bales.

SETTING	REACTION
1	Slowest
2	Slow
3	Mid-Point (Initial Setting)
4	Fast
5	Fastest

To Adjust Bale Shape Sensitivity:

1. Turn tractor key to ON position. Do not start tractor engine.
2. Press and hold COUNTER key (B) while turning monitor-controller ON.
3. Continue to hold COUNTER key and press PLUS key until **CH011** appears in digital display. Release COUNTER key and view current sensitivity setting (1—5).
4. Use PLUS key to increase setting, making indicators more responsive. Use MINUS key to reduce setting, making indicators less responsive.
5. Turn monitor-controller OFF to enter setting into memory.

6. Turn tractor key to OFF position. Remove key.

PP98408,000103C-19-11FEB13

Test Net Switch (Channel 012)

NOTE: Microswitch position and operation can be checked by using the monitor-controller diagnostic channels.

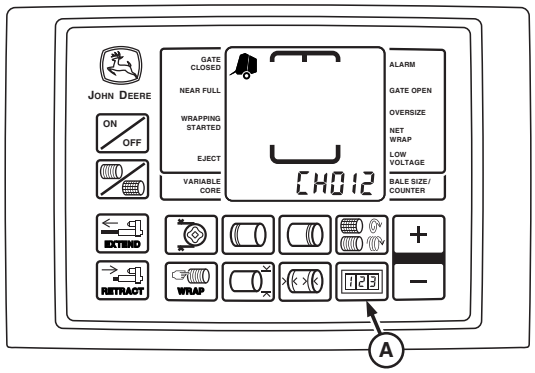

E52494—UN—24JUN03

E79990—UN—22SEP15

Net Wrap Switch

A—COUNTER Key
B—Lever

1. Turn the tractor ignition key to ON position. Do not start engine.
2. Press and hold the COUNTER key (A) while turning the monitor-controller ON. Continue to hold the COUNTER key (A) and press the PLUS key until **CH012** appears in the digital display.
3. Release the key and view the reading (switch closed internally).

Diagnostic Channel	Function	Switch Depressed Reading	Switch Released Reading
012	Net Wrap Switch	00 (Zero)—Cutting	12—Net Normal (Tone)

4. To open the switch internally, depress the lever (B). View the second reading or listen for the tone (switch open).
5. If readings are not as shown, check the wiring. (See Check And Adjust Net Wrap Switch in Service—Net Wrap section.)
6. If switch adjustment does not produce normal readings:
   a. Turn the monitor-controller OFF. Turn the tractor ignition key to OFF position. Remove key.
   b. Check for correct wiring connections.
   c. Check the wire harness for cuts and breaks.
   d. Check the harness connectors for damaged (pushed in) terminals.
   e. Check that wires are not shorted to each other or to ground.
   f. Replace the switch if necessary.

DP99999,0000DBF-19-27NOV17

Test Oversize Bale Switch (Channel 013)

1. Turn the tractor ignition key to the ON position. Do not start the tractor engine.

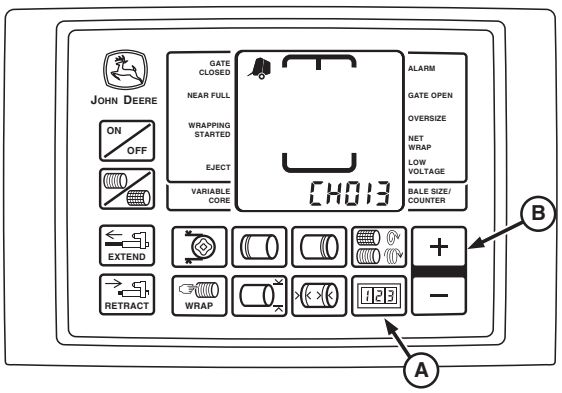

E52528—UN—31AUG17

BaleTrak™ Pro Monitor

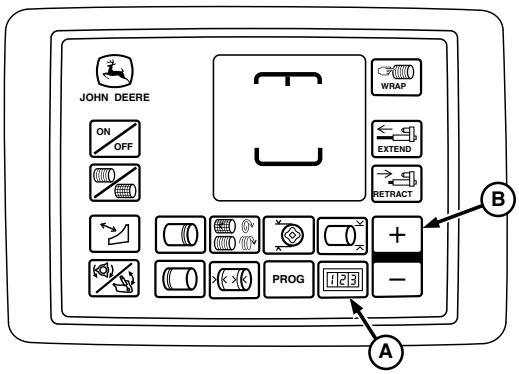

E84402—UN—31AUG17

BaleTrak™ Plus Monitor

A—COUNTER Key

B—PLUS Key

2. Press and hold the COUNTER key (A) while turning the monitor-controller ON.
3. Continue to hold the COUNTER key and press the PLUS key (B) until the digital display shows CH013.
4. Release the keys and view the reading on the display. Verify that the display reads 012.
5. Open the side door and depress the switch actuator. Verify that the display reads 00 and the alarm tone sounds.

NOTE: Tension arm must be fully raised for oversize bale switch to be depressed.

6. Start the tractor engine. Using the SCV lever, raise the gate to full height.
7. Verify that the display reads 00 and the alarm tone sounds.

Diagnostic Channel	Function	Display Reading Switch Open	Display Reading Switch Closed
013	Oversize Bale Switch	012	00 (Tone)

8. If readings are not as shown, adjust switch position and test again. (See ADJUST OVERSIZE BALE SWITCH in Service-Baler section.)
9. If switch adjustment does not produce normal readings:
   a. Turn the monitor-controller OFF. Turn the tractor key to the OFF position and remove the key.
   b. Check the wire harness for cuts and breaks.
   c. Check harness connectors for damaged (pushed back) terminals.
   d. Check for correct wire connections. (See WIRE HARNESS DIAGRAM—BALER in Service—Baler section.)
   e. Replace switch if necessary. (See your John Deere dealer or qualified service provider.)

DP99999,0000E0C-19-26SEP17

Test Gate Latch Proximity Switches (Channels 014 and 015)

1. Turn the tractor ignition key to the ON position. Start the tractor engine. Using the SCV lever, ensure that the gate is fully closed.

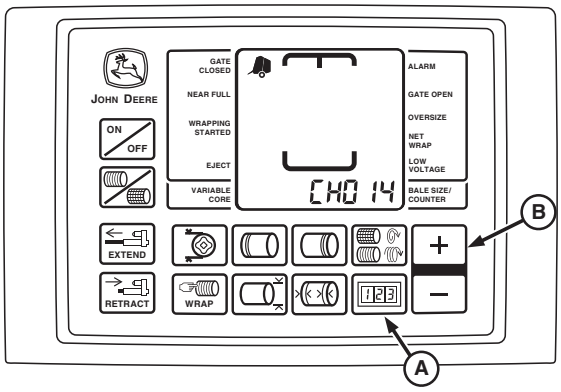

E84666—UN—27SEP17

BaleTrak™ Pro Monitor

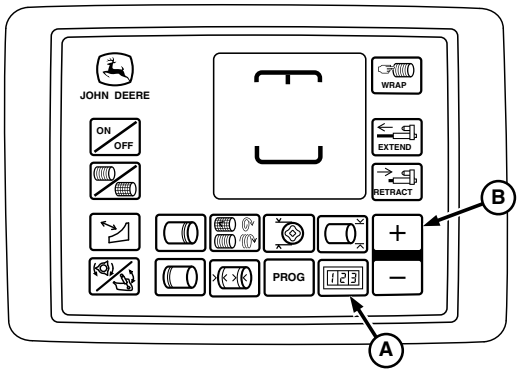

E84402—UN—31AUG17

BaleTrak™ Plus Monitor

A—COUNTER Key
B—PLUS Key

2. Press and hold the COUNTER key (A) while turning the monitor-controller ON.
3. Continue to hold the COUNTER key and press the PLUS key (B) until the digital display shows CH014.
4. Release the keys and view the reading on the display. Verify that the display reads 00.
5. Using the SCV lever, raise the gate to full height.
6. Verify that the display reads 012 and the alarm tone sounds.
7. Using the SCV lever, close the gate. Verify that the display changes back to 00 and the alarm tone goes off.
8. Press the PLUS key until the digital display shows CH015.
9. Release the keys and view the reading on the display. Verify that the display reads 00.
10. Using the SCV lever, raise the gate to full height.
11. Verify that the display reads 012 and the alarm tone sounds.

Diagnos-tic Channel	Function	Display Reading Switch Open (Gate Closed)	Display Reading Switch Closed (Gate Open)
014	Right-Hand Gate Latch Proximity Switch	00	012 (Tone)
015	Left-Hand Gate Latch Proximity Switch	00	012 (Tone)

12. Using the SCV lever, close the gate. Verify that the display changes back to 00 and the alarm tone goes off.
13. If readings are not as shown, adjust switch position and test again. (See ADJUST GATE LATCH PROXIMITY SWITCHES in Service-Baler section.)
14. If switch adjustment does not produce normal readings:
    a. Turn the monitor-controller OFF. Turn the tractor key to the OFF position and remove the key.
    b. Check the wire harness for cuts and breaks.
    c. Check harness connectors for damaged (pushed back) terminals.
    d. Check for correct wire connections. (See WIRE HARNESS DIAGRAM—BALER in Service—Baler section.)
    e. Replace the switch if necessary. (See a John Deere dealer or qualified service provider.)

SF04007,00012AD-19-14DEC18

Check PTO and Lower Drive Roll Speed (Channels 016 and 017)

IMPORTANT: The following procedure is not used on a 460M or 560M Baler with a regular pickup.

Use speed readouts to verify proper operation and adjustment of sensors. Access channel 016 on the monitor-controller for PTO speed and channel 017 for pickup drive speed.

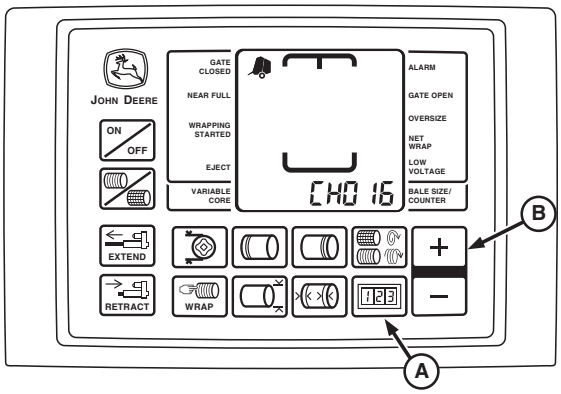

E57907—UN—24AUG09

A—COUNTER Key
B—PLUS Key

1. Start the tractor engine and operate at a low idle. Engage the PTO.
2. Press and hold the COUNTER key (A) while turning the monitor-controller ON.
3. Continue to hold the COUNTER key and press the PLUS key (B) until **CH016** appears in the digital display.
4. Release the COUNTER key. The PTO speed is displayed. The speed readout must be stable and not vary by more than 5 rpm.
5. Press and hold the COUNTER key and press the PLUS key (B) until **CH017** appears in the digital display.
6. Release the COUNTER key. The pickup drive speed is displayed. The speed readout must be stable and not vary by more than 5 rpm.

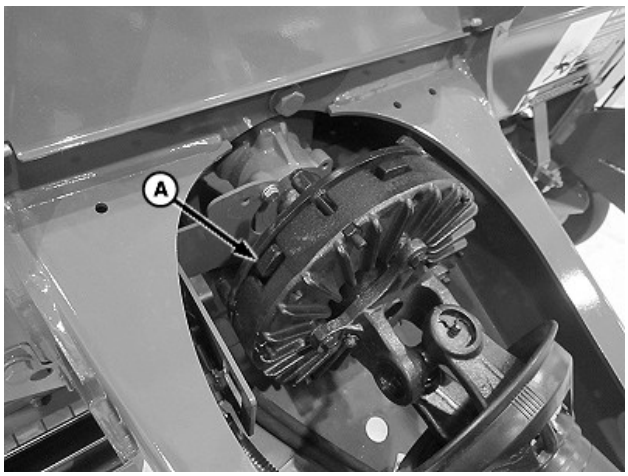

E84074—UN—07AUG17

PTO Speed Sensor

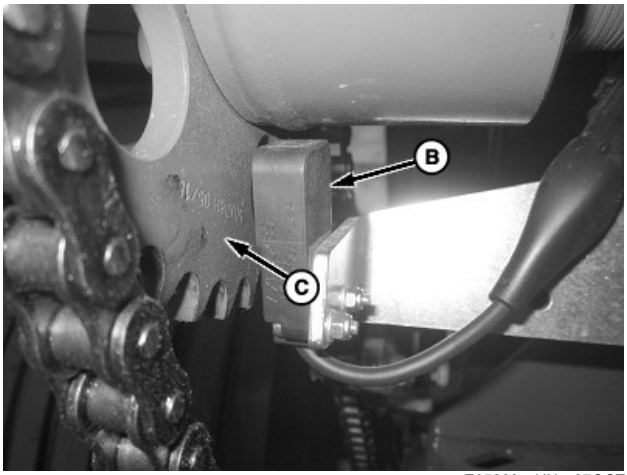

E85280—UN—27OCT17

Lower Drive Roll (Pickup) Sensor

A—Clutch Lobe (6 used)
B—Sensor
C—Sprocket

7. If the speed variation exceeds 5 rpm, shut off the tractor engine and remove the ignition key.

   Adjust the PTO sensor closer to clutch lobes (A) but not closer than 1 mm (0.04 in). Adjust the pickup sensor (B) closer to the sprocket (C) but not closer than 3 mm (0.12 in). Ensure that the sensor is aligned with the passing holes in the sprocket.

   When the tractor is operated at rated PTO speed, channel 016 must display 540 rpm or 1000 rpm, depending on the speed option. Channel 017 must display approximately 310 rpm for the MegaWide™ Plus pickup and 170 rpm for the MegaWide™ HC2 feed system. The slip clutch alert system must be activated within the monitor-controller for proper operation.

   Turning the PTO speed sensor ON and OFF:

   - Access channel 204.
   - To turn the PTO speed sensor feature ON, set the value to 540 for the 540 rpm option or 1000 for the 1000 rpm option.
   - To turn the feature OFF, set the value to 0.

   Turning the pickup speed sensor ON and OFF:

   - Access channel 205.
   - To turn the pickup speed sensor ON, set the value to 310 for the MegaWide™ Plus pickup or 170 for the HC2 feed system.
   - To turn the pickup speed sensor OFF, set the value to 0.
   - Turning OFF the pickup sensor on channel 205 and turning ON the PTO sensor on channel 204 still allows automatic speed compensation during the wrap cycle.

DP99999,0000DA9-19-27OCT17

Test Twine or Net Wrap Actuator Current (Channel 018)

IMPORTANT: Current overload protection to the twine actuator is bypassed when using channel 018. Extended use of channel 018 can cause actuator damage.

NOTE: Channel 018 allows the operator to use the EXTEND key (B) and the RETRACT key (C) to position the actuator for service.

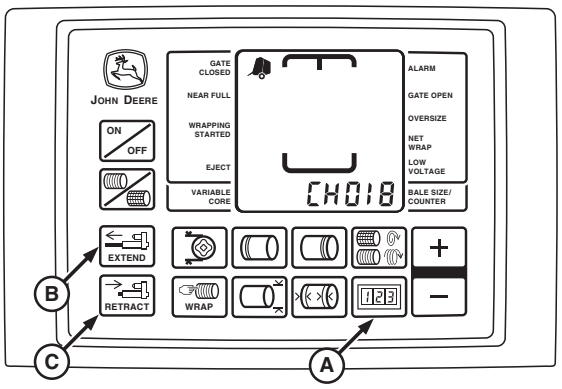

E52520—UN—26JUN03

BaleTrak™ Pro Monitor

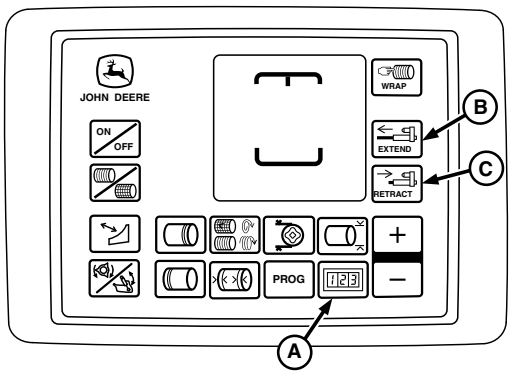

E84427—UN—06SEP17

BaleTrak™ Plus Monitor

A—COUNTER Key
B—EXTEND Key
C—RETRACT Key

This test is used to determine the working condition of the actuator through its entire range of operation.

MegaWide is a trademark of Deere & Company

To Test Actuator (Motor and Linkage):

IMPORTANT: Remove the roll of net wrap material from the baler if testing the net actuator voltage. Otherwise, if the PTO is engaged with the net actuator extended, net feeds into the empty baler and can cause damage to the pickup or rotary feed system.

1. If testing net and wrap actuator current, remove the roll of net wrap material from the baler.
2. Turn the tractor ignition key to the ON position. Do not start the tractor engine.
3. Press and hold the COUNTER key (A) while turning the monitor-controller ON.
4. Continue to hold the COUNTER key and press the PLUS key until **CH018** appears in the digital display.
5. Release the COUNTER key; the digital display changes to show the actuator static current flow reading of **0** to **1**.
6. Use the EXTEND key (B) and the RETRACT key (C) to operate the actuator in both directions. The display must show a current flow reading between **1** and **8** while the actuator motor is operating during mid stroke (no load).
   - Below normal readings indicate low tractor voltage, or poor or corroded harness connections
   - Above normal readings indicate binding linkage or partially shorted motor windings
   - A spike in the current reading indicates a mechanical obstruction to the linkage
7. Continue to operate the actuator to the fully retracted position. The display must show a stall (*load*) current reading between **22** and **30**.
   - Below normal reading indicates bad or corroded harness connections
   - Above normal reading indicates partially shorted motor windings or actuator binding
8. Press the RETRACT key to move the actuator to the home position.
9. Turn the monitor-controller OFF. Turn the tractor ignition key to the OFF position and remove the key.

DP99999,0000E09-19-06SEP17

Test Tractor Convenience Outlet Voltage (Channel 019)

Complete the following check to determine if the convenience outlet provides adequate power to the BaleTrak™ system.

IMPORTANT: Remove the roll of net wrap material from the baler if testing the net actuator voltage. Otherwise, if PTO is engaged with the net actuator extended, net feeds into the empty baler and can damage the pickup or rotary feed system.

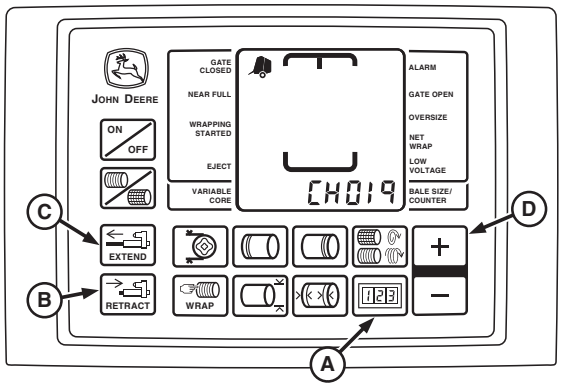

E52521—UN—26JUN03

A—COUNTER Key
B—RETRACT Key
C—EXTEND Key
D—PLUS Key

1. If testing the net wrap actuator current, remove the roll of net wrap material from the baler.
2. Start the tractor engine.
3. Press and hold the COUNTER key (A) while turning the monitor-controller ON.
4. Continue to hold the COUNTER key and press the PLUS key (D) until **CH019** appears in the digital display.
5. Release the COUNTER key and view the voltage readout.
6. Using the EXTEND key (C), extend the twine or net actuator slightly.
7. Push and hold the RETRACT key (B) until the actuator stalls out in the fully retracted position. Note the voltage displayed during the first 4 seconds after stalling.

Specification	
Convenience Outlet—Voltage (Minimum)	9.7 V

8. If the voltage is less than specification, see your John Deere dealer for the proper convenience outlet kit. The proper kit must be used to provide a convenience outlet with the proper wire size and a 30 A circuit breaker. When installing this kit, connect the power and ground wires directly to the battery terminal clamp bolts. (See TRACTOR CONVENIENCE OUTLET in Preparing the Tractor section.)

CAUTION: The convenience outlet is wired directly to the battery. Turning off the tractor ignition key does not disconnect power to the monitor.

9. Turn the monitor-controller OFF. Turn the tractor ignition key to the OFF position and remove the key.

   Disconnect the power cable from the monitor when working around the knife arm. Turning off the tractor ignition key does NOT turn off power to the monitor.

DP99999,0000DDB-19-14AUG17

Test Liquid Crystal Display (LCD) Panel (Channel 020)

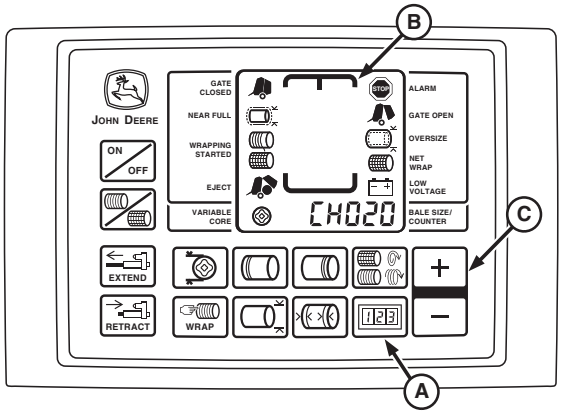

E52529—UN—10JUN08

BaleTrak™ Pro Monitor

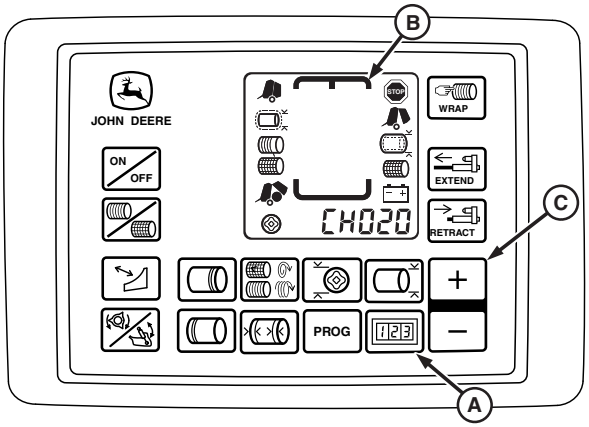

E84257—UN—30AUG17

BaleTrak™ Plus Monitor

A—COUNTER Key
B—LCD Panel
C—PLUS Key

Use the following test procedure to check if a segment of the LCD panel has failed.

1. Turn the tractor ignition key to the ON position. Do not start the tractor engine.
2. Press and hold the COUNTER key (A) while pressing the TWINE or NET key to turn the monitor-controller ON.
3. Continue to hold the COUNTER key and press the PLUS key (C) until **CH020** appears in the digital display.

NOTE: The number of bale shape indicator bars displayed is 24 bars per side.

4. Release the keys and view the entire LCD panel (B). Make sure that all segments and indicators are displayed. If not, see your John Deere dealer.
5. Turn the monitor-controller OFF. Turn the tractor ignition key to the OFF position and remove the key.

DP99999,0000E16-19-05SEP17

Test Drop Floor and Knife Switches (Channel 024 and Channel 025)

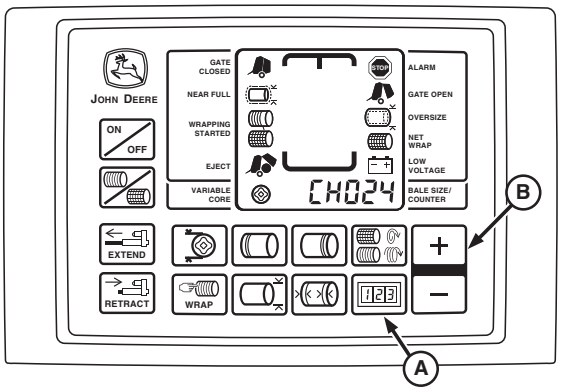

E84260—UN—06SEP17

BaleTrak™ Pro Monitor-Controller

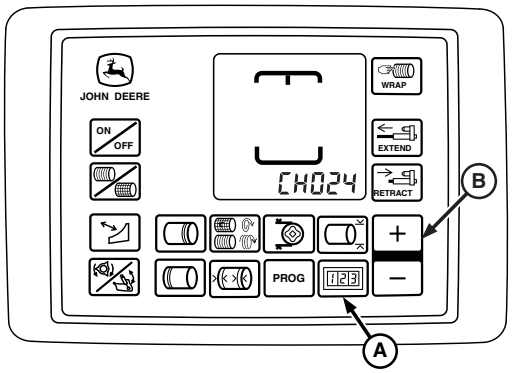

E84261—UN—06SEP17

BaleTrak™ Plus Monitor-Controller

A—COUNTER Key
B—PLUS Key

1. Start tractor engine.
2. Press and hold the COUNTER key (A) while turning the monitor-controller ON.

3. Continue to hold the COUNTER key and press the PLUS key (B) until the digital display shows the desired channel.
4. Release the key and view the switch state indication as follows:

Diagnostic Channel	Function	Display Indication Switch Closed	Display Indication Switch Open
024	Drop Floor Switch	00 (Drop floor up)	12 (with tone) (Drop floor down)
025	Knife Switch	12 (with tone) (Knives up)	00 (Knives down)

5. If the switch state indication does not match the actual switch state, then perform diagnostics:
   - Turn the monitor-controller OFF. Turn the tractor ignition key to the OFF position. Remove the key.
   - Check for the correct wire connections. (See Wire Harness Diagram —Baler in this section.)
   - Check wire harness for cuts or breaks.
   - Check harness connectors for damaged (pushed back) terminals.
   - Check sensor adjustment. Ensure that the sensor face is 3—8 mm (0.118—0.315 in) from the sensing target.
   - Replace switch if necessary. (See your John Deere dealer or qualified service provider.)

DP99999,0000E0B-19-22NOV17

Adjust Bale Diameter Display (Channel 028)

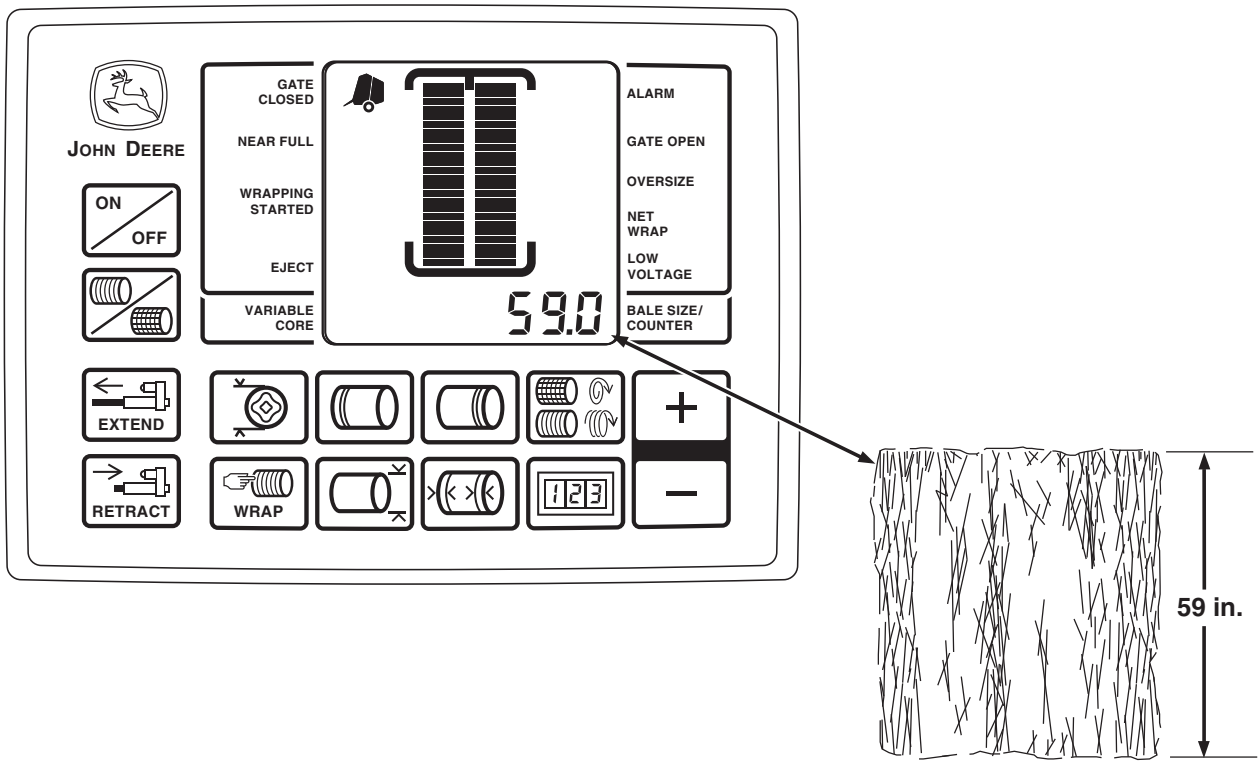

E84119—UN—25AUG17

1. Access Channel 028 on the BaleTrak™ monitor-controller. (See Enter Customer [Channels 001—037] in this section.)
2. Make a bale and apply twine or the net wrap.
3. Before ejecting the bale, note the bale size reading on the monitor.

NOTE: To check actual bale size, measure the bale horizontally and vertically on both ends. Add the four measurements together and divide by four to determine average bale diameter.

4. Eject the bale and measure the actual size of the bale.
5. Compare the measured bale size to the calculated size previously noted. If the values are different, perform the following steps to calibrate the display.

BaleTrak is a trademark of Deere & Company

NOTE: Do not eject the bale.

6. Make another bale the same size as the previously measured bale as indicated by Channel 028 on the monitor-controller. Wrap the bale and disengage the PTO. Do not eject the bale.
7. Note the bale size that is displayed on Channel 028 on the BaleTrak™ monitor.
8. To match the measured bale size, adjust the displayed size with the plus and minus keys. Press the plus and minus keys simultaneously to record the new value as the actual bale size. The monitor beeps to confirm that the change was recorded.
9. Repeat the procedure as necessary.

DP99999,0000DD3-19-27OCT17

Twine Arm Calibration (Channel 029)

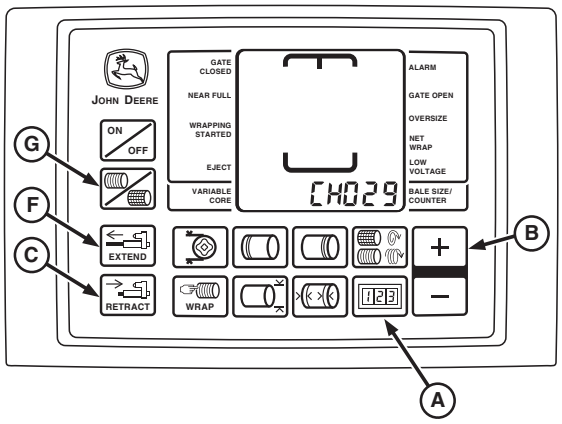

E52575—UN—10JUL03

BaleTrak™ Pro Monitor

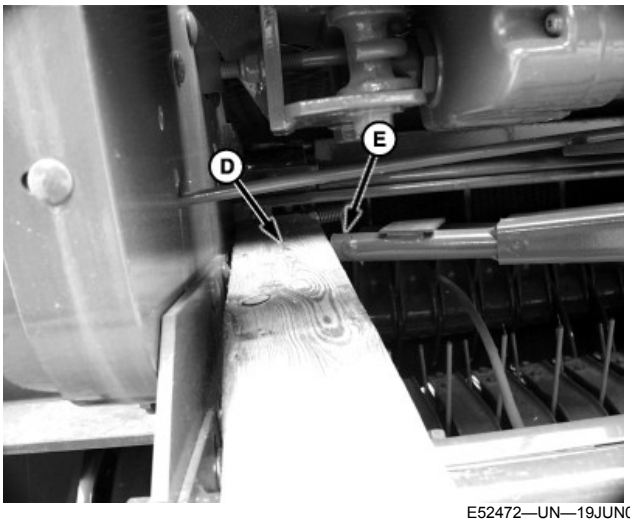

E52472—UN—19JUN03

A—COUNTER Key
B—PLUS Key
C—RETRACT Key
D—Wood Block
E—Twine Arm
F—EXTEND Key

G—TWINE or NET Key

1. Turn the tractor ignition key to the ON position. Do not start the tractor engine. Turn the monitor-controller ON.
2. Briefly press the TWINE or NET key (G). Ensure that the monitor-controller is in the TWINE mode (indicator will briefly show on screen).
3. Turn the monitor-controller OFF.
4. Press and hold the COUNTER key (A) while turning the monitor ON.
5. Continue to hold the COUNTER key and press the PLUS key (B) until **CH029** appears in the digital display. Release both keys.
6. Press and hold the RETRACT key (C) until the twine actuator fully retracts and the display reads zero.

NOTE: 89 mm equals 3-1/2 in, which is standard dimension for most 4 inch wide lumber, such as a 2 x 4 or 4 x 4.

7. Place an 89 mm (3-1/2 in) wood block (D) on the right-hand side of the bale chamber, so that the twine arm (E) contacts the wood block when the actuator is extended.
8. Press the EXTEND key (F) and extend the actuator until it stalls by contacting the wood block.
9. Enter the value displayed in to memory by pressing the PLUS and MINUS keys together and listening for two confirming beeps.
10. Press the RETRACT key (C) to release the wood block.

DP99999,0000DCB-19-20SEP17

Adjust Delay of Twine Eject (Channel 033)

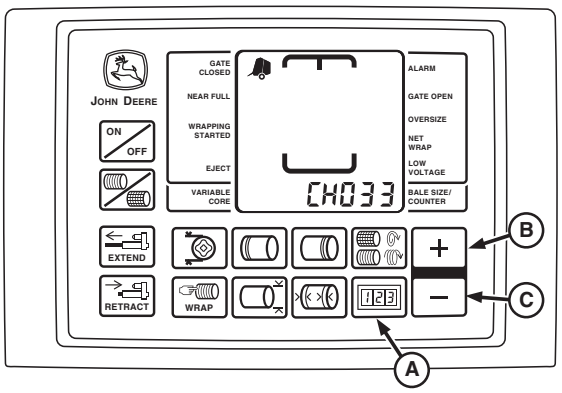

E55146—UN—11MAY07

A—COUNTER Key
B—PLUS Key
C—MINUS Key

The initial setting for time between cut-off of twine and display of the eject icon is zero seconds.

In some conditions, twine unrolling can be reduced by delaying bale ejection until bale has rotated to a position where twine ends are just above contact area for the push bar. This time delay value depends on operator reaction time, bale size, and PTO speed. A suggested starting value of 1.5 seconds can be entered, but other values need to be tried to obtain best results, as small changes can have significant impact on twine unrolling. Also, ends of twine can adhere better to a bale, if bale continues to rotate after twine is cut.

To Change Setting:

1. Turn tractor key to ON position. Do not start tractor engine.
2. Press and hold COUNTER key (A) while turning monitor-controller ON.
3. Continue to hold COUNTER key and press PLUS key (B) until **CH033** appears in digital display.
4. Release COUNTER key and view current setting.
5. Use PLUS and MINUS keys (B) and (C) to change the delay of twine eject icon to desired setting (0—10 seconds).
6. Turn monitor-controller OFF to enter setting into memory.
7. Turn tractor key to OFF position. Remove key.

PP98408,0001044-19-11FEB13

Adjust B-Wrap Cut Position (Channel 034)

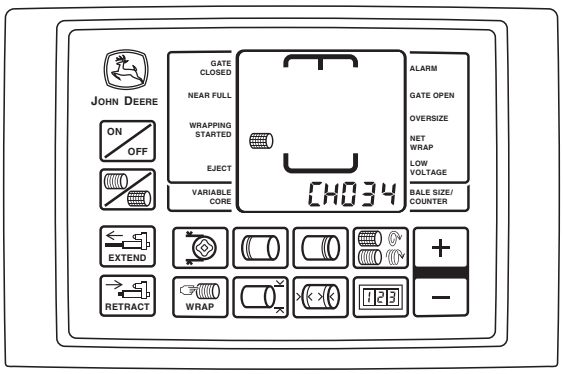

E69423—UN—20FEB13

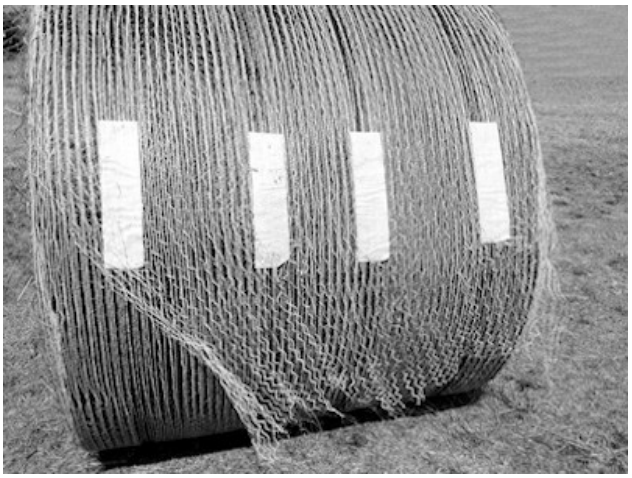

E69427—UN—25FEB13

This Tail is Too Long, Should Be 2—12 inches

The cut position setting controls the length of the net tail after the velcro. The correct setting provides a tail length of 50—300 mm (2—12 in). A longer tail can cause the wrap to pull off the bale during handling.

Set the B-wrap cut position as follows:

1. Turn the tractor ignition key to the ON position. Do not start the tractor engine.
2. Press and hold the COUNTER key while turning the monitor-controller ON.
3. Continue to hold the COUNTER key and press the PLUS key until CH034 appears in the display.

NOTE: The setting in channel 034 must be less than the setting in channel 035.

4. Use the PLUS and MINUS keys to adjust the setting:
   a. **BaleTrak™ Pro system:** The setting range is 16—160 with a default value of 126.
   b. **BaleTrak Plus system:** The setting range is 9—88 with a default value of 69.

   Changing the setting increases or decreases the length of the tail by approximately 228 mm (9 in) each time the PLUS or MINUS key is pressed.
5. Turn the monitor-controller OFF to enter the setting into memory.

DP99999,0000E0F-19-01SEP17

Adjust Bale Orientation (Channel 035)

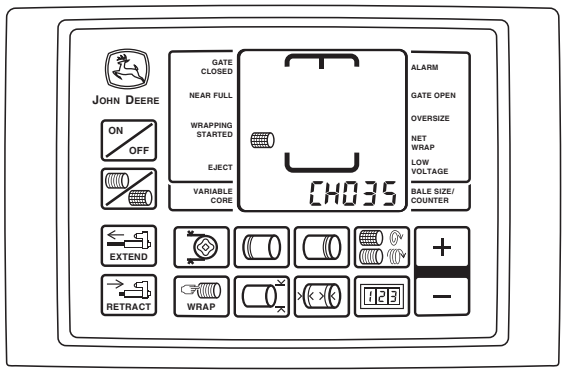

E69424—UN—20FEB13

BaleTrak™ Pro Monitor

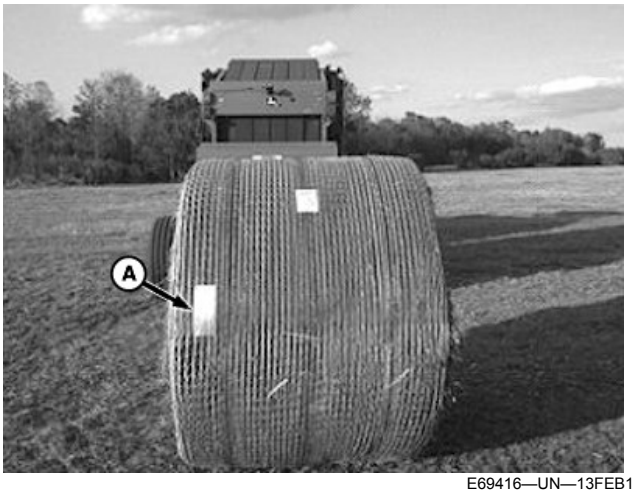

E69416—UN—13FEB13

A—Aluminum Tape

This setting adjusts and controls the position of the bale when it is ejected. The bale must be positioned so that the overlap portion of the B-Wrap material and the seam are on the bottom of the bale. This orientation keeps water from running into the bale. The aluminum tape (A) must be on the back, left-hand side of the bale (viewed while facing the rear of the baler).

Set the bale orientation control value as follows:

1. Turn the tractor ignition key to the ON position. Do not start the tractor engine.
2. Press and hold the COUNTER key while turning the monitor-controller ON.
3. Continue to hold the COUNTER key and press the PLUS key until CH035 appears in the display.
4. Use the PLUS and MINUS keys to adjust the setting:
   a. **BaleTrak™ Pro system:** The setting range is 58—240 with a default value of 182.
   b. **BaleTrak™ Plus system:** The setting range is 31—132 with a default value of 101.

   The setting increases or decreases by approximately 10 each time the PLUS or MINUS key is pressed.

IMPORTANT: Disengage bale push bar for B-Wrap operation.

The bale push bar affects seam location upon bale ejection and can damage B-Wrap material.

With the B-Wrap sensor tied into the oversize bale sensor, false bale oversize alarms can occur. If a false oversize bale alarm occurs, turn the PTO off and examine the B-Wrap sensor on the bottom of the gate for the following:

1. A belt lace is stopped above the sensor. If this has occurred, move the belt lacing past the sensor by turning on the PTO briefly.
2. A foreign metal object is caught on or around the sensor. If this has occurred, remove the foreign material and verify that the error does not reoccur.

DP99999,0000E10-19-18SEP17

Baler Model Program (Channel 201)

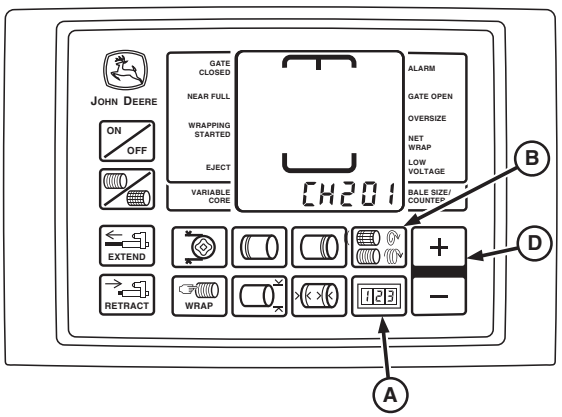

E84265—UN—28AUG17

BaleTrak™ Pro Monitor

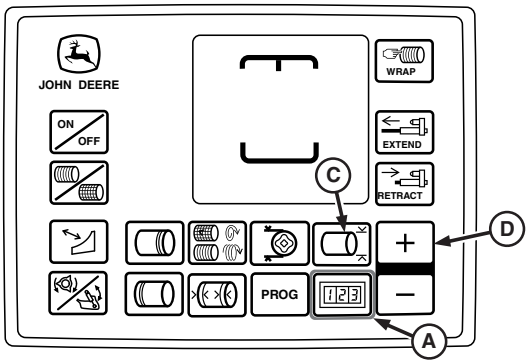

E84266—UN—28AUG17

BaleTrak™ Plus Monitor

A—COUNTER Key
B—NUMBER OF WRAPS Key
C—BALE DIAMETER Key

D—PLUS Key

The monitor-controller software includes various model programs. Each program is written specifically for the baler model for which the monitor-controller was originally supplied.

When replacing the monitor-controller with a new unit, or moving the monitor-controller to a different model baler, review and revise the model program if necessary.

NOTE: The model number displayed on the monitor must match the current baler model number. The twine or net wrap application, slip clutch alert, and optional variable core features only operate correctly if the model numbers match.

To Change Model Program:

1. Turn the tractor ignition key to the ON position. Do not start the tractor.
2. Access the Baler Model Program Channel 201 as follows:
   a. **BaleTrak™ Pro Monitor:** Press and hold the COUNTER key (A) and the NUMBER OF WRAPS key (B) while turning the monitor-controller ON.
   b. **BaleTrak™ Plus Monitor:** Press and hold the COUNTER key (A) and the BALE DIAMETER key (C) while turning the monitor-controller ON.
   c. Verify that **CH201** is displayed on the monitor.
3. Release both keys. The baler model number is displayed.
4. Press the PLUS key (D) or the MINUS key to change to the correct model.
5. Turn the monitor-controller OFF to enter the setting into memory.
6. Turn the monitor-controller ON and verify the baler model number. The model number is displayed for approximately 2 seconds. If the baler model number displayed is incorrect, repeat the previous steps to change it.
7. Turn the tractor ignition key to the OFF position and remove the key.

DP99999,0000E11-19-13SEP17

Twine Feature (Channel 202) (Turning On and Off)

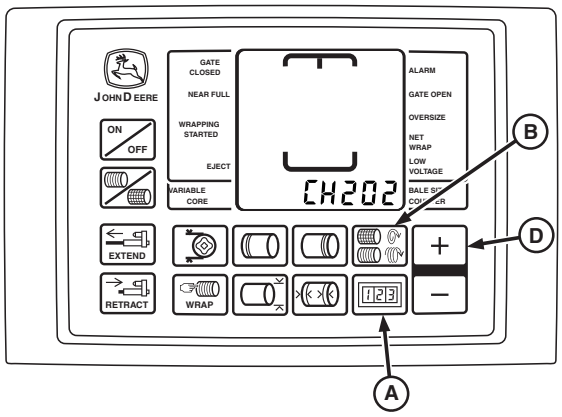

E84585—UN—14SEP17

BaleTrak™ Pro Monitor

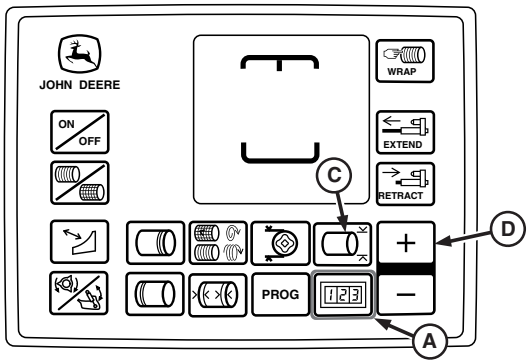

E84266—UN—28AUG17

BaleTrak™ Plus Monitor

A—COUNTER Key
B—NUMBER OF WRAPS Key
C—BALE DIAMETER Key
D—PLUS Key

The twine feature can be turned OFF or ON by accessing Channel 202.

NOTE: The baler model number displayed on the monitor must match the current baler model number. The twine or net wrap application, slip clutch alert, and optional variable core features only operate correctly when the model numbers match.

NOTE: If both the twine and the net wrap features are turned OFF, the monitor considers the twine feature ON.

Turning Feature On and Off:

1. Turn the tractor ignition key to the ON position. Do not start the tractor.
2. Access the setup channels as follows:
   a. **BaleTrak™ Pro Monitor:** Press and hold both the COUNTER key (A) and the NUMBER OF

WRAPS key (B) while turning the monitor-controller ON.

b. **BaleTrak™ Plus Monitor:** Press and hold both the COUNTER key (A) and the BALE DIAMETER key (C) while turning the monitor-controller ON.

c. Verify that **CH201** is displayed on the monitor.

3. Release both keys. The baler model number is displayed. Verify that the correct model number is shown.
4. Press and hold the COUNTER key and press the PLUS key (D) until **CH202** is displayed.
5. Release the keys. Check the value displayed.
   a. When the value is **0**, the twine mode is OFF.
   b. When the value is **1**, the twine mode is ON.
6. If necessary, press the PLUS or MINUS key and change the setting.
7. To enter the setting into memory, turn the monitor-controller OFF .
8. Turn the monitor-controller ON and verify the baler model number. The model number is displayed for approximately 2 seconds. If the model number displayed is incorrect, see BALER MODEL PROGRAM (CHANNEL 201) in this section.
9. Turn the tractor ignition key to the OFF position and remove the key.

DP99999,0000E12-19-14SEP17

Net Wrap and B-Wrap Feature (Channel 203) (Turning On and Off)

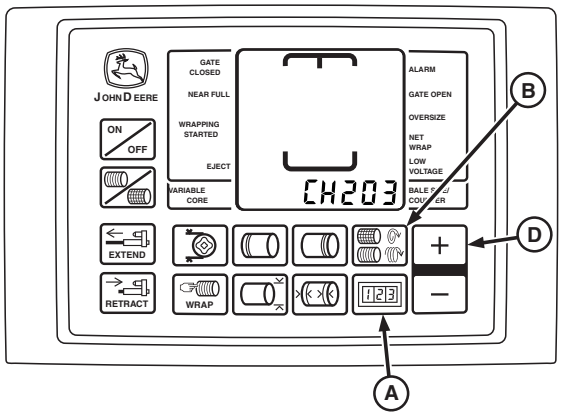

E84586—UN—14SEP17

BaleTrak™ Pro Monitor

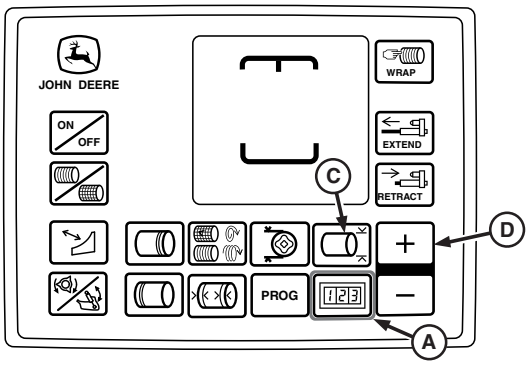

E84266—UN—28AUG17

BaleTrak™ Plus Monitor

A—COUNTER Key
B—NUMBER OF WRAPS Key
C—BALE DIAMETER Key
D—PLUS Key

The net wrap feature can be turned OFF, ON, or switched to the B-Wrap mode using Channel 203.

NOTE: The model number displayed on the monitor must match the current baler model number. The net wrap, B-Wrap, twine, slip clutch alert, and optional variable core features only operate correctly when the model numbers match.

NOTE: If both the net wrap and twine features are turned OFF, the monitor considers the twine feature ON.

Turning Feature On and Off:

1. Turn the tractor ignition key to the ON position. Do not start the tractor.
2. Access the setup channels as follows:
   a. **BaleTrak™ Pro Monitor:** Press and hold both the COUNTER key (A) and the NUMBER OF WRAPS key (B) while turning the monitor-controller ON.
   b. **BaleTrak™ Plus Monitor:** Press and hold both the COUNTER key (A) and the BALE DIAMETER key (C) while turning the monitor-controller ON.
   c. Verify that **CH201** is displayed on the monitor.
3. Release both keys. The baler model number is displayed. Verify that the correct model number is shown.
4. Press and hold the COUNTER key and press the PLUS key (D) until **CH203** is displayed.
5. Release the keys. The wrap mode setting is displayed.
   a. When the value is **0** the net mode is OFF.
   b. When the value is **1** the net mode is ON.
   c. When the value is **b1** the B-Wrap mode is ON.

IMPORTANT: Bale diameter must be set to 168 cm (66 in) and the push bar must be disengaged to operate in the B-Wrap mode.

6. To change the wrap mode setting, press the PLUS or MINUS key until the desired value is displayed.
7. To enter the setting into memory, turn the monitor-controller OFF.
8. Turn the monitor-controller ON and verify the baler model number. The model number is displayed for approximately 2 seconds. If the displayed baler model number is incorrect, see BALER MODEL PROGRAM (CHANNEL 201) in this section.
9. Turn the tractor ignition key to the OFF position and remove the key.

DP99999,0000DDC-19-26OCT17

Slip Clutch Alert PTO Speed Sensor (Channel 204) (Turning On and Off)

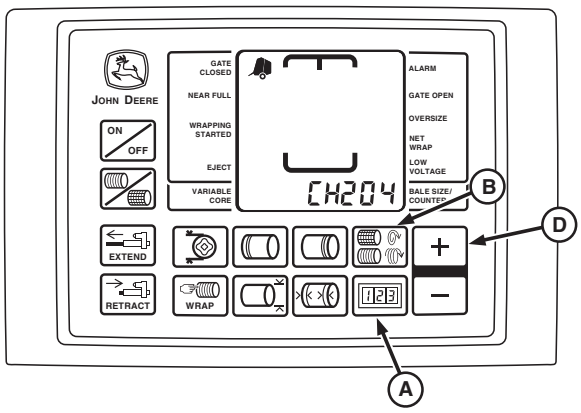

E84587—UN—14SEP17

BaleTrak™ Pro Monitor

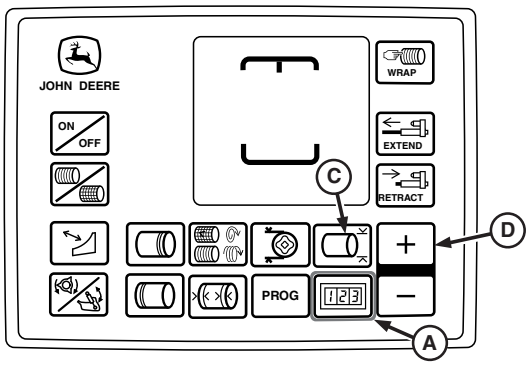

E84266—UN—28AUG17

BaleTrak™ Plus Monitor

A—COUNTER Key
B—NUMBER OF WRAPS Key
C—BALE DIAMETER Key
D—PLUS Key

The PTO speed sensor can be turned OFF or ON using channel 204.

The entire slip clutch alert feature can be turned off by changing the setting to **0**.

NOTE: Both channels 204 and 205 must be turned ON to use the slip clutch alert and speed compensation features.

Turning Feature On and Off:

1. Turn the tractor ignition key to the ON position. Do not start the tractor.
2. Access the setup channels as follows:
   a. **BaleTrak™ Pro Monitor:** Press and hold both the COUNTER key (A) and the NUMBER OF WRAPS key (B) while turning the monitor-controller ON.
   b. **BaleTrak™ Plus Monitor:** Press and hold both the COUNTER key (A) and the BALE DIAMETER key (C) while turning the monitor-controller ON.
   c. Verify that **CH201** is displayed on the monitor.
3. Release both keys. The baler model number is displayed. Verify that the model number is correct.
4. Press and hold the COUNTER key and press the PLUS key (D) until **CH204** is displayed.
5. Release the keys.
6. Check the current speed sensor status. To change the status:
   a. To turn the PTO speed sensor ON, press the PLUS key (D) until **540** is shown in the display.
   b. To turn the PTO sensor OFF, press the PLUS or MINUS key until a value of **0** is displayed.
7. To enter the setting into memory, turn the monitor-controller OFF.
8. Turn the monitor-controller ON and verify the baler model number. The model number is displayed for approximately 2 seconds. If the baler model displayed is incorrect, see BALER MODEL PROGRAM (CHANNEL 201) in this section.
9. Turn the tractor ignition key to the OFF position and remove the key.

DP99999,0000DDD-19-26OCT17

Slip Clutch Alert Drive Roll Speed Sensor (Channel 205) (Turning On and Off)

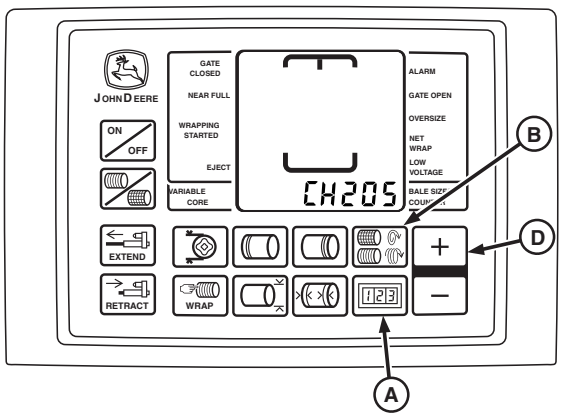

E84588—UN—14SEP17

BaleTrak™ Pro Monitor

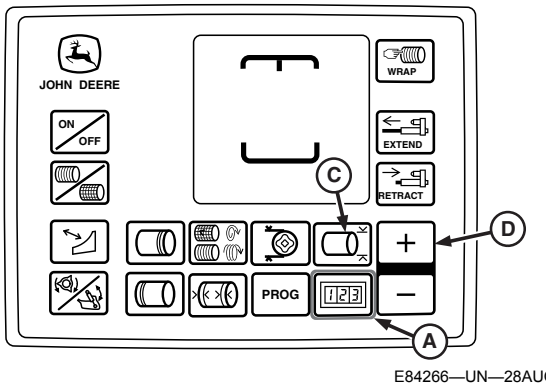

E84266—UN—28AUG17

BaleTrak™ Plus Monitor

A—COUNTER Key
B—NUMBER OF WRAPS Key
C—BALE DIAMETER Key
D—PLUS Key

The pickup speed sensor can be turned OFF and ON using channel 205. The PTO speed sensor must be on for the slip clutch alert feature to work.

*NOTE: Turning OFF the drive roll sensor on channel 205 and turning ON the PTO sensor on channel 204 allows automatic speed compensation during the wrapping cycle. If there is a malfunction, the pickup speed sensor can be turned OFF by changing the channel 205 value to **0**.*

Both channels 204 and 205 must be turned ON to use slip clutch alert features.

Turning Feature On and Off:

1. Turn the tractor ignition key to the ON position. Do not start the tractor.
2. Access the setup channels as follows:
   a. **BaleTrak™ Pro Monitor:** Press and hold both the COUNTER key (A) and the NUMBER OF WRAPS key (B) while turning the monitor-controller ON.
   b. **BaleTrak™ Plus Monitor:** Press and hold both the COUNTER key (A) and the BALE DIAMETER key (C) while turning the monitor-controller ON.
   c. Verify that **CH201** is displayed on the monitor.
3. Release both keys. The baler model is displayed. Verify that the model number is correct.
4. Press and hold the COUNTER key and press the PLUS key (D) until **CH205** is displayed.
5. Release the COUNTER key.
6. Check the current speed sensor status. To change the status:
   a. To turn the pickup speed sensor OFF, press the PLUS or MINUS key until a value of **0** is displayed.
   b. **BaleTrak™ Pro Monitor:** To turn the speed sensor ON, press the PLUS key until **310** is displayed.
   c. **BaleTrak™ Plus Monitor:** To turn the speed sensor ON, press the PLUS key until **170** is displayed.
7. To enter the setting into memory, turn the monitor-controller OFF.
8. Turn the monitor-controller ON and verify the baler model number. The model number is displayed for approximately 2 seconds. If the displayed baler model number is incorrect, see BALER MODEL PROGRAM (CHANNEL 201) in this section.
9. Turn the tractor ignition key to the OFF position and remove the key.

DP99999,0000DDE-19-26OCT17

Calibrate Slip Clutch Alert PTO and Drive Roll Speed Sensors (Channel 206 and 207)

Both the PTO and drive roll speed sensors must be activated within the baler monitor-controller to enable operation of the slip clutch alert feature.

To Calibrate PTO Speed Sensor:

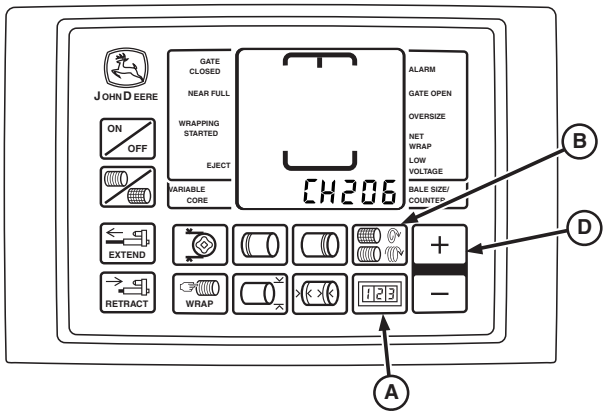

E84589—UN—14SEP17

BaleTrak™ Pro Monitor

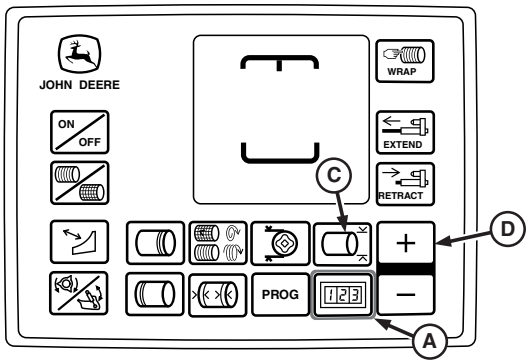

E84266—UN—28AUG17

BaleTrak™ Plus Monitor

A—COUNTER Key
B—NUMBER OF WRAPS Key
C—BALE DIAMETER Key
D—PLUS Key

1. Turn the tractor ignition key to the ON position. Do not start the tractor.
2. Access the setup channels as follows:
   a. **BaleTrak™ Pro Monitor:** Press and hold both the COUNTER key (A) and the NUMBER OF WRAPS key (B) while turning the monitor-controller ON.
   b. **BaleTrak™ Plus Monitor:** Press and hold both the COUNTER key (A) and the BALE DIAMETER key (C) while turning the monitor-controller ON.
   c. Verify that **CH201** is displayed on the monitor.
3. Release both keys. The baler model number is displayed. Verify that the model number is correct.
4. Press and hold the COUNTER key and press the PLUS key (D) until **CH206** is displayed.
5. Release the COUNTER key.
6. Check the value displayed on the monitor. If necessary, press the PLUS or MINUS key until the value **6** is shown in the display.
7. To enter the setting into memory, turn the monitor-controller OFF.
8. Turn the monitor-controller ON and verify the baler model number. The model number is displayed for approximately 2 seconds. If the model number displayed is not correct, see Baler Model Program (Channel 201) in this section.
9. Turn the tractor ignition key to the OFF position and remove the key.

To Calibrate Drive Roll (Pickup) Speed Sensor:

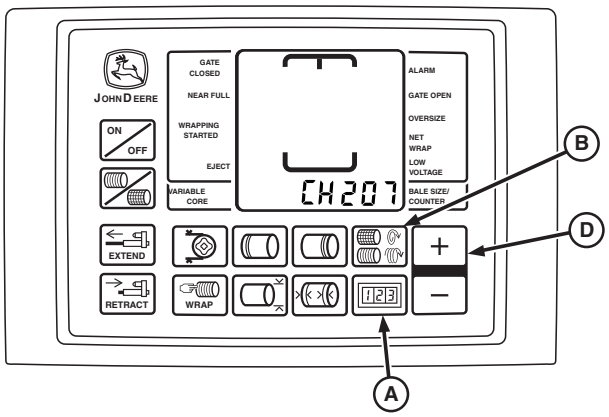

E84590—UN—14SEP17

BaleTrak™ Pro Monitor

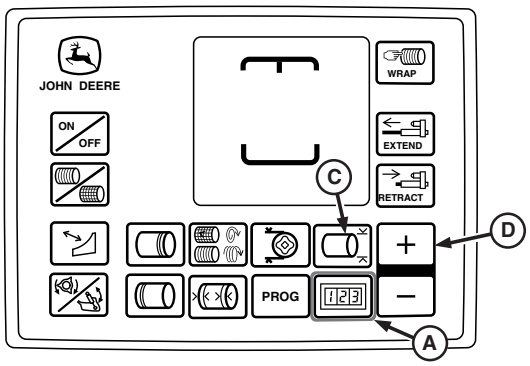

E84266—UN—28AUG17

BaleTrak™ Plus Monitor

A—COUNTER Key
B—NUMBER OF WRAPS Key
C—BALE DIAMETER Key
D—PLUS Key

1. Turn the tractor ignition key to the ON position. Do not start the tractor.
2. Access the setup channels as follows:
   a. **BaleTrak™ Pro Monitor:** Press and hold both the COUNTER key (A) and the NUMBER OF WRAPS key (B) while turning the monitor-controller ON.
   b. **BaleTrak™ Plus Monitor:** Press and hold both

the COUNTER key (A) and the BALE DIAMETER key (C) while turning the monitor-controller ON.

c. Verify that **CH201** is displayed on the monitor.

3. Release both keys. The baler model number is displayed. Verify that the model number is correct.
4. Press and hold the COUNTER key and press the PLUS key (D) until **CH207** is displayed.
5. Release the COUNTER key.
6. Check the value displayed on the monitor. If necessary, press the PLUS or MINUS key until the value **6** is shown in the display.
7. To enter the setting into memory, turn the monitor-controller OFF.
8. Turn the monitor-controller ON and verify the baler model number. The model number is displayed for approximately 2 seconds. If the model number displayed is not correct, see Baler Model Program (Channel 201) in this section.
9. Turn the tractor ignition key to the OFF position and remove the key.

Verify Operation and Adjustment of Sensors:

1. Start the tractor engine. Operate the engine at low idle and engage the PTO.
2. Press and hold the COUNTER key while turning the monitor-controller ON.
3. Continue to hold the COUNTER key and press the PLUS key until **CH016** appears in the digital display.
4. Release the COUNTER key and the PTO speed is displayed. The speed readout must be stable and not vary by more than 5 rpm.
5. Press and hold the COUNTER key and press the PLUS key until **CH017** appears in the digital display.
6. Release the COUNTER key and the pickup drive roll speed is displayed. The speed readout must be stable and not vary by more than 5 rpm.

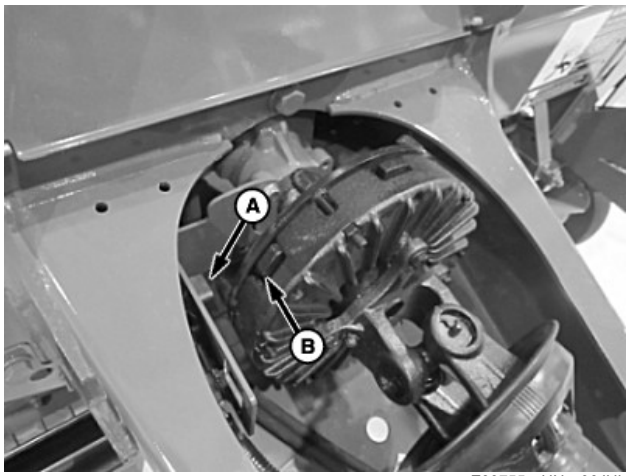

E83755—UN—06JUL17

PTO Speed Sensor

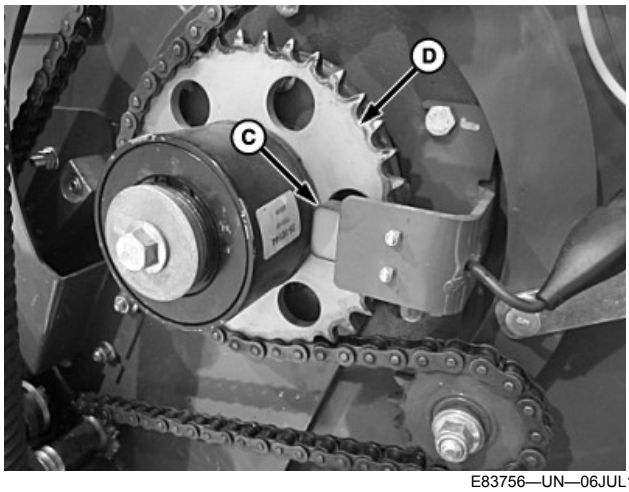

E83756—UN—06JUL17

Pickup Drive Roller Speed Sensor

A—Speed Sensor
B—Clutch Lobe
C—Speed Sensor, Pickup Drive Roll
D—Sprocket

7. If either speed variation exceeds 5 rpm, shut off the tractor engine and remove the key. Adjust speed sensor positions as follows:
   - Adjust the PTO speed sensor (A) closer to the clutch lobes (B) but not closer than 1 mm (0.04 in).
   - Adjust the speed sensor (C) closer to the drive sprocket (D) but not closer than 3 mm (0.12 in). Ensure that the face of the sensor is aligned with the holes in the sprocket.

DP99999,0000DAA-19-22NOV17

Variable Core Operation (Channel 208) (Turning On and Off)

The optional variable core operation can be turned OFF and ON by accessing channel 208.

NOTE: The model number displayed on the monitor must match the baler model number. The twine or net wrap application, slip clutch alert, and optional variable core features only operate correctly if the numbers match.

Turning Feature On and Off:

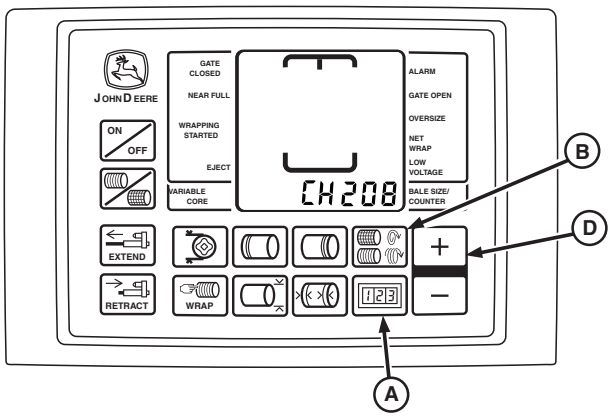

E84591—UN—14SEP17

BaleTrak™ Pro Monitor

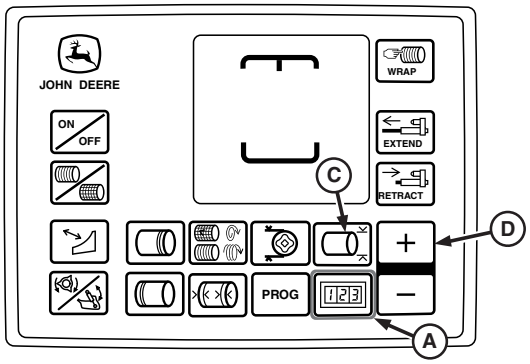

E84266—UN—28AUG17

BaleTrak™ Plus Monitor

A—COUNTER Key
B—NUMBER OF WRAPS Key
C—BALE DIAMETER Key
D—PLUS Key

1. Turn tractor ignition key to the ON position. Do not start the tractor.
2. Access the setup channels as follows:
   a. **BaleTrak™ Pro Monitor:** Press and hold both the COUNTER key (A) and the NUMBER OF WRAPS key (B) while turning the monitor-controller ON.
   b. **BaleTrak™ Plus Monitor:** Press and hold both the COUNTER key (A) and the BALE DIAMETER key (C) while turning the monitor-controller ON.
   c. Verify that **CH201** is displayed on the monitor.
3. Release both keys. The baler model number is displayed. Verify that the model number is correct.
4. Press and hold the COUNTER key and press the PLUS key (D) until **CH208** is displayed.
5. Release the COUNTER key.
6. Check the status of the variable core feature. To change the status:
   a. To turn the feature **OFF**, press the MINUS key to change the displayed value to **0**.
   b. To turn the feature **ON**, press the PLUS key to change the displayed value to **1**.
7. To enter the setting into memory, turn the monitor-controller OFF.
8. Turn the monitor-controller ON and verify the baler model number. The model number is displayed for approximately 2 seconds. If the baler model number displayed is incorrect, see BALER MODEL PROGRAM (CHANNEL 201) in this section.
9. Turn the tractor ignition key to the OFF position and remove the key.

DP99999,0000E22-19-14SEP17

Set Pickup Type (Channel 209)

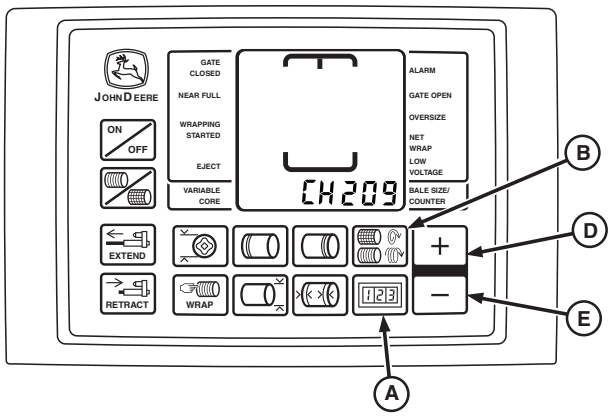

E84592—UN—14SEP17

BaleTrak™ Pro Monitor

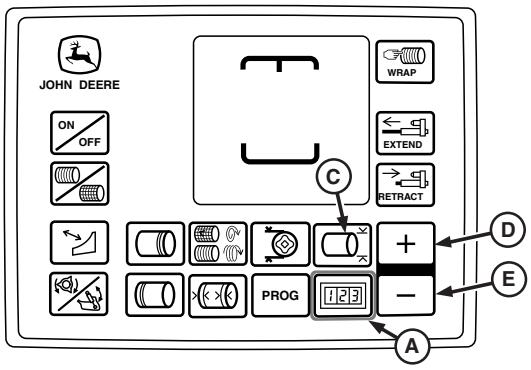

E84594—UN—26SEP17

BaleTrak™ Plus Monitor

A—COUNTER Key
B—NUMBER OF WRAPS Key

C—BALE DIAMETER Key
D—PLUS Key
E—MINUS Key

This channel is used to set the monitor-controller to recognize whether the baler is equipped with a regular pickup or a precutter pickup.

1. Turn the tractor ignition key to the ON position. Do not start the tractor.
2. Access the setup channels as follows:
   a. **BaleTrak™ Pro Monitor:** Press and hold both the COUNTER key (A) and the NUMBER OF WRAPS key (B) while turning the monitor-controller ON.
   b. **BaleTrak™ Plus Monitor:** Press and hold both the COUNTER key (A) and the BALE DIAMETER key (C) while turning the monitor-controller ON.
   c. Verify that **CH201** is displayed on the monitor.
3. Release both keys. The baler model is displayed. Verify that the model number is correct.
4. Press and hold the COUNTER key and press the PLUS key (D) until **CH209** is shown in the display.
5. Release the COUNTER key.
6. Check the setting that appears on the monitor. If necessary, press the PLUS key (D) or the MINUS key (E) and change the pickup type setting.
   - Set the displayed value to **0** if equipped with a regular pickup.
   - Set the displayed value to **1** if equipped with a precutter type pickup.
7. To enter the setting into memory, turn the monitor-controller OFF .
8. Turn the monitor-controller ON and verify the baler model number. The model number is displayed for approximately 2 seconds. If the baler model displayed is incorrect, change the model number. (See BALER MODEL PROGRAM (CHANNEL 201) in this section).
9. Turn the tractor ignition key to the OFF position and remove the key.

DP99999,0000E13-19-14SEP17

Set Sensor Type (Channel 211)

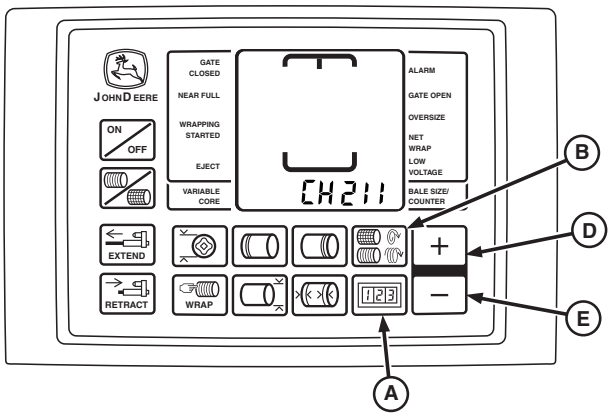

E84593—UN—14SEP17

BaleTrak™ Pro Monitor

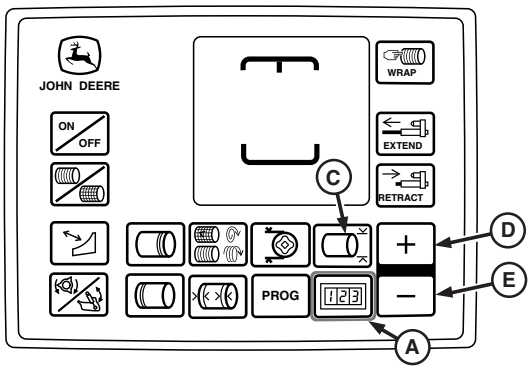

E84594—UN—26SEP17

BaleTrak™ Plus Monitor

A—COUNTER Key
B—NUMBER OF WRAPS Key
C—BALE DIAMETER Key
D—PLUS Key
E—MINUS Key

1. Turn the tractor ignition key to the ON position. Do not start the tractor.
2. Access the setup channels as follows:
   a. **BaleTrak™ Pro Monitor:** Press and hold both the COUNTER key (A) and the NUMBER OF WRAPS key (B) while turning the monitor-controller ON.
   b. **BaleTrak™ Plus Monitor:** Press and hold both the COUNTER key (A) and the BALE DIAMETER key (C) while turning the monitor-controller ON.
   c. Verify that **CH201** is displayed on the monitor.
3. Release both keys. The baler model is displayed. Verify that the model number is correct.
4. Press and hold the COUNTER key and press the PLUS key (D) until **CH211** is shown in the display.
5. Release the COUNTER key.
6. Check the setting that appears on the monitor. If

necessary, press the PLUS key (D) or the MINUS key (E) and change the setting for the sensor type used on this machine.

- Set the displayed value to **0** if equipped with the old style sensors.
- Set the displayed value to **1** if equipped with the new style sensors.

7. To enter the setting into memory, turn the monitor-controller OFF.
8. Turn the monitor-controller ON and verify the baler model number. The model number is displayed for approximately 2 seconds. If the baler model displayed is incorrect, change the model number. (See BALER MODEL PROGRAM (CHANNEL 201) in this section.)
9. Turn the tractor ignition key to the OFF position and remove the key.

DP99999,0000E14-19-26OCT17

MegaWide™ HC2 Feed System Description

CAUTION: To keep the pickup from leaking down when servicing the MegaWide™ HC2 pickup, raise the pickup using the tractor hydraulics and place a block of wood under the pickup frame.

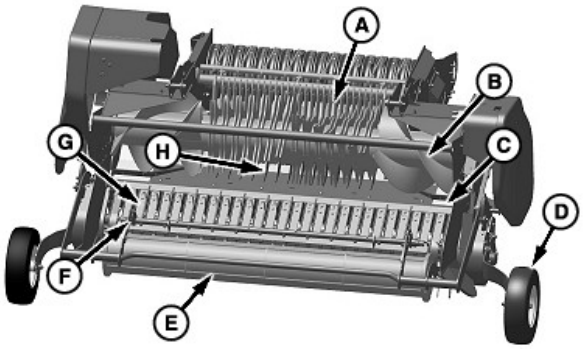

E82754—UN—15MAY17

A—Rotor Tines
B—Rotor Auger
C—Auger Scraper (460M, 6 used) (560M, 2 used)
D—Gauge Wheel (2 used)
E—Roller Baffle
F—Compressor Rack
G—Pickup Reel and Strippers
H—Precutter Knives

As the baler moves forward, the pickup collects windrowed crop from the ground and delivers it to the front of the main rotor. The windrow is compressed and controlled by roller baffle (E) and compressor rack (F). The roller baffle and the compressor rack hold the crop against the pickup reel and strippers (G), maintaining positive flow of material up into the rotor. The crop is fed into the rotor system and is converged to the width of the bale chamber with the flights of rotor auger (B) and auger scrapers (C). Rotor tines (A) feed the crop back to the secondary rotor. The secondary rotor feeds the crop smoothly into the bale chamber.

Knives (H) can be engaged to cut the incoming crop to shorter lengths. The length of cut can be controlled by changing the number of knives installed.

Pickup height is determined by adjusting pickup gauge wheels (D) on both sides of the pickup. An average height for teeth-to-ground clearance is approximately 20—30 mm (0.75—1.2 in). Correct adjustment depends on terrain, type of crop, and crop conditions.

The rotor is protected by a cam-type clutch at the input shaft of the main drive gear case. The pickup reel is protected by a cam-type clutch at the left-hand rotor shaft.

The pickup suspension is adjusted by changing the vertical float spring length.

DP99999,0000D65-19-20NOV17

Operation of Drive Roll Slip Clutch

NOTE: Excessive clutch slipping reduces clutch life.

When the pickup is plugged with too much crop or a foreign object, the drive roll clutch slips. The purpose of the slip clutch is to prevent damage to the baler pickup.

The slip clutch only reengages if the PTO is stopped or tractor rpm is reduced to idle speed. Unplug the pickup as follows:

- Disengage the PTO.
- Shut off the tractor engine, and remove the ignition key.
- Remove crop debris or foreign object.

DP99999,0000D92-19-27JUN17

Slip Clutch Alert (MegaWide™ Plus Pickup)

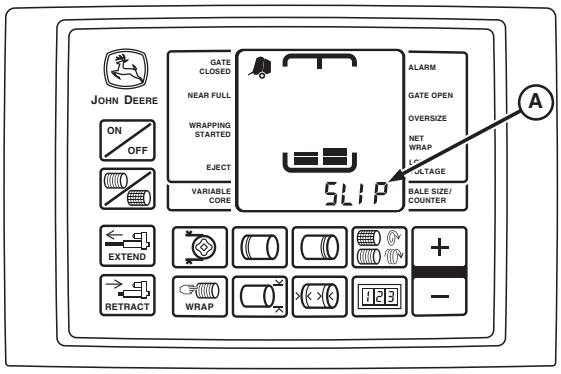

E52931—UN—12NOV03

A—Digital Display

MegaWide is a trademark of Deere & Company

This system alerts the operator by an audible alarm. Also the word **Slip** appears in the digital display (A) when either the main PTO drive clutch or the pickup drive clutch slips.

Understanding Slip Clutch Alert System

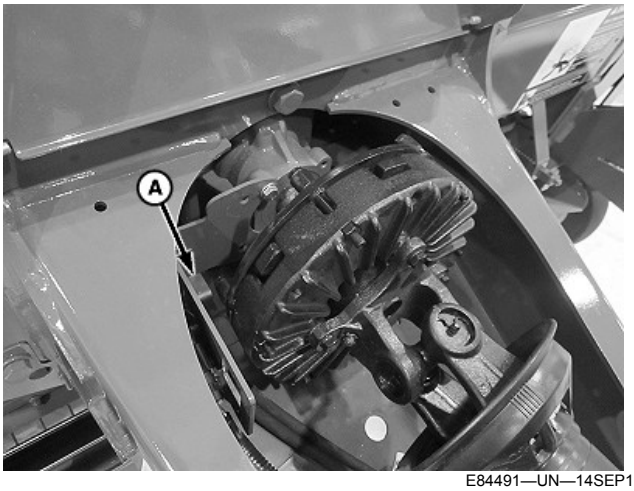

E84491—UN—14SEP17

PTO Speed Sensor

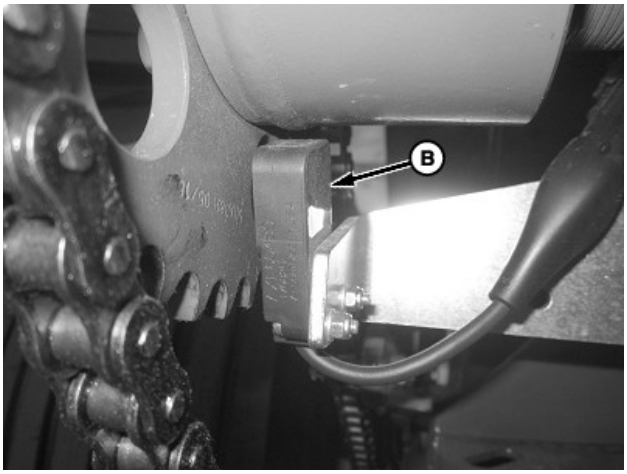

E84492—UN—14SEP17

Lower Drive Roll Sensor

A—PTO Speed Sensor
B—Speed Sensor, Lower Drive Roll

The PTO speed sensor (A) measures the input speed of the PTO driveline. The speed sensor (B) measures the output speed of the pickup slip clutch. The BaleTrak™ Pro or Plus monitor-controller compares these speeds. If the speed drops below 10 percent of the calculated operating speed for more than 1 second, the slip alarm is activated. The system informs the operator when either of the two clutches is slipping.

Speed Compensation of Twine or Net Wrap Application

The speed compensation program applies the desired twine spacing or number of net layers, regardless of PTO speed.

BaleTrak is a trademark of Deere & Company

For example:

If the monitor-controller is set for 102 mm (4 in) twine spacing and wrapping is done at less than full PTO speed, 102 mm (4 in) twine spacing is maintained.

If the monitor-controller is set for two net layers and the twine or net application is done at less than full PTO speed, the two net layers are maintained.

The PTO driveline sensor (A) must be activated within the monitor-controller for proper operation of the speed compensation program. (See Net Wrap, Slip Clutch Alert, and Variable Core Features [Turning ON and OFF] in the Service—BaleTrak™ Pro and Plus System section.)

Turning PTO Speed Sensor ON and OFF:

- PTO speed sensor can be turned OFF or ON by accessing channel 204.
- Feature can be turned ON by changing value to 540 rpm or 1000 rpm, depending on the baler configuration.
- Entire slip clutch alert feature can be turned OFF by changing value to 0.

Turning Pickup Speed Sensor ON and OFF:

- Pickup rpm sensor can be turned OFF and ON by accessing channel 205.
- Feature can be turned ON by changing value to 310 rpm.
- Pickup rpm sensor can be turned OFF by changing value to 0.
- Turning OFF the pickup sensor on channel 205 and turning ON the PTO sensor on channel 204 still allows automatic speed compensation during the twine or net application cycle.

SF04007,0000F2B-19-22NOV17

Slip Clutch Alert (MegaWide™ HC2 Feed System)

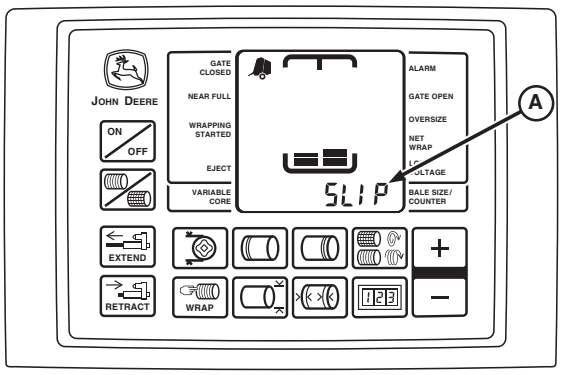

E52931—UN—12NOV03

A—Digital Display

This system alerts the operator by an audible alarm.

Also the word **Slip** appears in the digital display (A) when either the main PTO drive clutch or the pickup drive clutch slips.

Understanding Slip Clutch Alert System

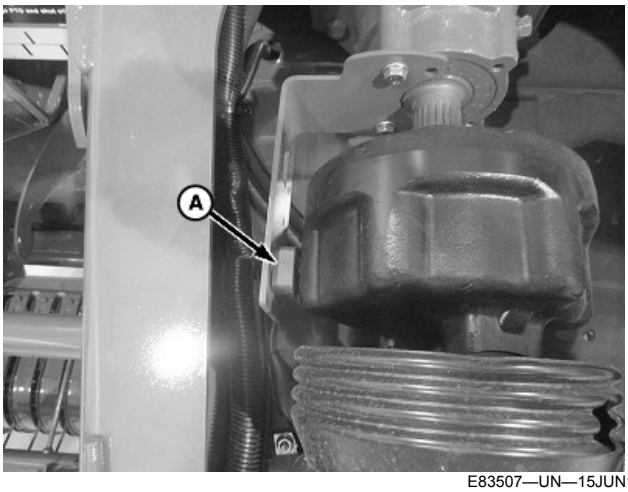

E83507—UN—15JUN17

PTO Speed Sensor

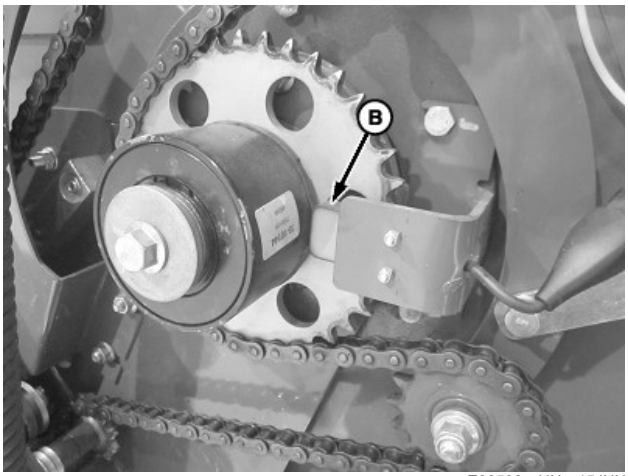

E83508—UN—15JUN17

Pickup Speed Sensor

A—PTO Speed Sensor
B—Pickup Speed Sensor

The PTO speed sensor (A) measures the input speed of the PTO driveline. The pickup speed sensor (B) measures the output speed of the pickup slip clutch. The BaleTrak™ Pro or Plus monitor-controller compares these speeds. If the speed drops below 10 percent of the calculated operating speed for more than 2 seconds, the slip alarm is activated. The system informs the operator when either of the two clutches is slipping.

NOTE: How quickly the alarm is triggered depends on how great the slip percentage is and for how long it stays at that threshold.

Speed Compensation of Twine or Net Wrap Application

The speed compensation program applies the desired twine spacing or number of net layers, regardless of PTO speed.

For example:

If the monitor-controller is set for 102 mm (4 in) twine spacing and the twine application is done at less than full PTO speed. The 102 mm (4 in) twine spacing is maintained.

If the monitor-controller is set for two net layers and the net application is done at less than full PTO speed. The two net layers are maintained.

The PTO driveline sensor (A) must be activated within the monitor-controller for proper operation of the speed compensation program. (See Net Wrap, Slip Clutch Alert, and Variable Core Features [Turning ON and OFF] in the Service—BaleTrak™ Pro and Plus System section.)

Turning PTO Speed Sensor ON and OFF:

- PTO speed sensor can be turned OFF or ON by accessing channel 204.
- Feature can be turned ON by changing value to 540 rpm or 1000 rpm, depending on the baler configuration.
- Entire slip clutch alert feature can be turned OFF by changing value to 0.

Turning Pickup Speed Sensor ON and OFF:

- Pickup rpm sensor can be turned OFF and ON by accessing channel 205.
- Feature can be turned ON by changing value to 170 rpm.
- Pickup rpm sensor can be turned OFF by changing value to 0.
- Turning OFF the pickup sensor on channel 205 and turning ON the PTO sensor on channel 204 still allows automatic speed compensation during the twine or net application cycle.

SF04007,0000F6F-19-22NOV17

Adjust Pickup Gauge Wheels

IMPORTANT: Gauge wheels must be positioned so the pickup is as high as possible, while the pickup teeth still clean the field adequately. Operating with pickup teeth contacting the ground can cause pickup damage.

BaleTrak is a trademark of Deere & Company

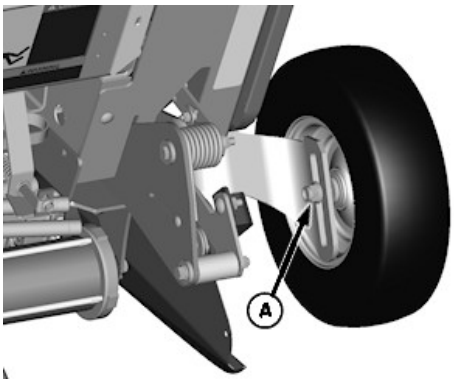

E61044—UN—13MAR12

A—Lock Nut

Four factors determine the adjustment for gauge wheels:

- Tractor drawbar height
- Baler tire size
- Baler wheel spindle position
- Baler hitch position

If any one of these factors change, adjust the gauge wheels. Position the gauge wheels to operate the pickup teeth as high as possible and still clean field adequately.

1. Park the baler on a level surface. Baler hitch height must match the drawbar height of the tractor used for baling.
2. Loosen lock nut (A) and raise the wheel to the top of the slot. Tighten lock nut. Repeat on the opposite side.

IMPORTANT: The distance between the gauge wheel and ground must always be equal to or less than the distance between the pickup teeth and ground. If not, the gauge wheels will not protect the pickup.

3. Adjust the pickup until pickup teeth have a minimum of 25 mm (1 in) ground clearance.
4. Loosen lock nut (A) and lower the wheel until it contacts the ground. Tighten lock nut (A). Repeat on the opposite side. Final adjustment depends on field conditions.

IMPORTANT: Check pickup float spring setting after gauge wheels are adjusted.

5. Check and adjust the float spring setting. (See Adjust Pickup Float Springs in Service—Baler section.) If the pickup bounces too much, decrease float spring force as needed.

DP99999,0000D34-19-22NOV17

Adjust Pickup Height (MegaWide™ Plus Pickup Only)

IMPORTANT: Operating with pickup teeth contacting the ground can cause pickup damage.

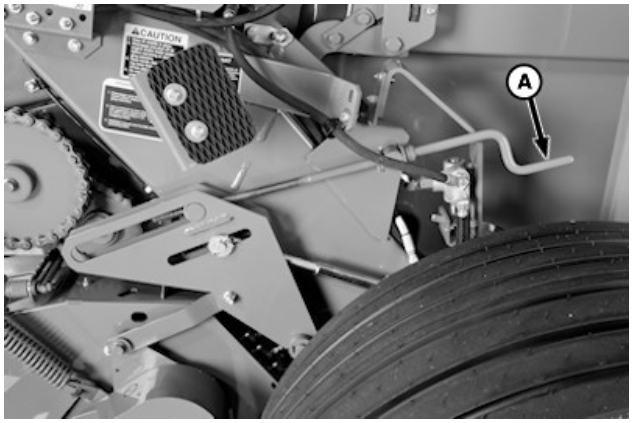

E66457—UN—09JUL12

A—Pickup Height Bell Crank

Operate the pickup with the teeth as high as possible while harvesting the field adequately.

Adjust pickup tooth height to obtain a ground clearance of 25—50 mm (1—2 in) for an initial setting. The final setting depends on field conditions.

To adjust pickup height:

- Turn bell crank (A) clockwise to raise the pickup
- Turn bell crank (A) counterclockwise to lower the pickup

If the baler is equipped with a hydraulic pickup lift, the bell crank acts as the downstop to control pickup operating height. This feature allows the pickup to return to the same operating height after raising and lowering hydraulically.

Always raise the pickup to the transport position when crossing ditches and moving from field to field.

DP99999,0000D66-19-22SEP17

Adjust Pickup Height (MegaWide™ HC2 Feed System)

1. Using the selective control valve (SCV) lever, fully lower the pickup. Shut off the tractor engine and remove the ignition key.

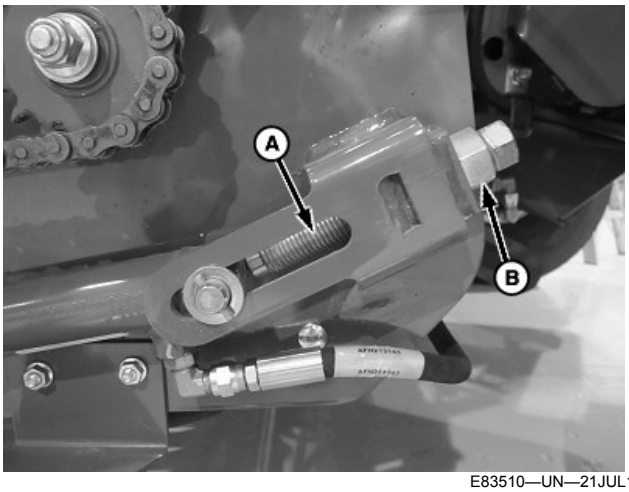

E83510—UN—21JUL17

Left-Hand Side Shown

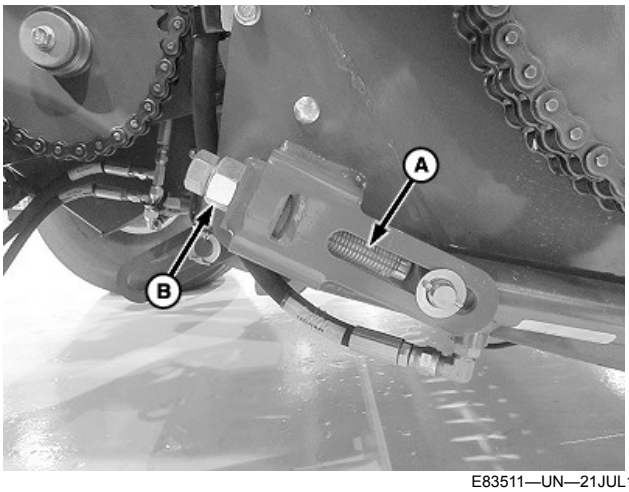

E83511—UN—21JUL17

Right-Hand Side Shown

A—Jack Bolt
B—Lock Nut

2. Adjust the pickup height by turning the jack bolt (A) clockwise to raise the pickup or counterclockwise to lower the pickup.

IMPORTANT: Left-hand and right-hand adjustments must be equal to avoid pickup frame damage.

3. Secure the jack bolt by tightening the lock nut (B) against the frame.

DP99999,0000D76-19-22SEP17

Adjust Gathering Wheel Height (If Equipped)

IMPORTANT: Gathering wheels must never be in heavy contact with the ground or damage to gathering wheels can occur.

NOTE: Gathering wheels are not available for the MegaWide™ Plus pickup or MegaWide™ HC2.

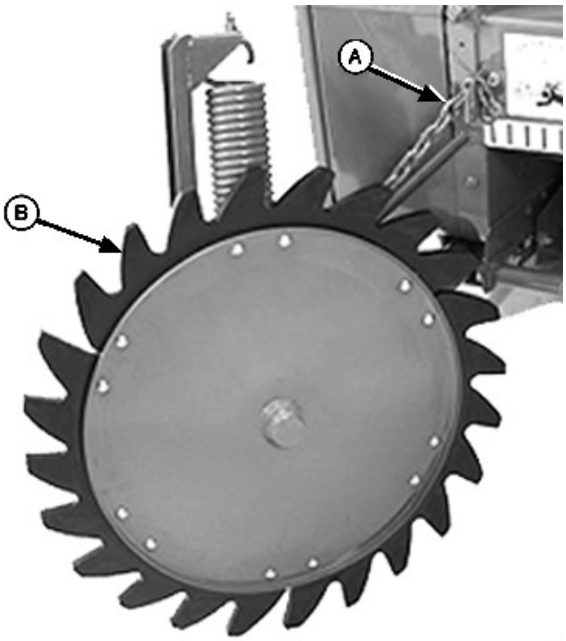

E40021—UN—29MAY96

A—Chain
B—Gathering Wheel

1. Remove chain (A) from chain anchor support and lower wheel (B) to ground.
2. Raise chain (A) one link and install back in chain anchor support. Wheel must be approximately 25 mm (1 in) from the ground.

   If less than one chain link is needed for an adjustment, twist the chain and install back in chain anchor support.

NOTE: Final adjustment is determined by field conditions.

SF04007,0000EE7-19-10MAY17

MegaWide is a trademark of Deere & Company

Pickup Gauge Wheels

NOTE: Gauge wheels are standard equipment on the MegaWide™ Plus and the MegaWide™ HC2 pickups.

E54315—UN—22JUN05

On machines equipped with a regular pickup, gauge wheels can be installed to improve pickup flotation in uneven terrain.

DP99999,0000D99-19-29JUN17

Gathering Wheels

NOTE: Gathering wheels are not used on machines equipped with the MegaWide™ Plus or the MegaWide™ HC2 pickup.

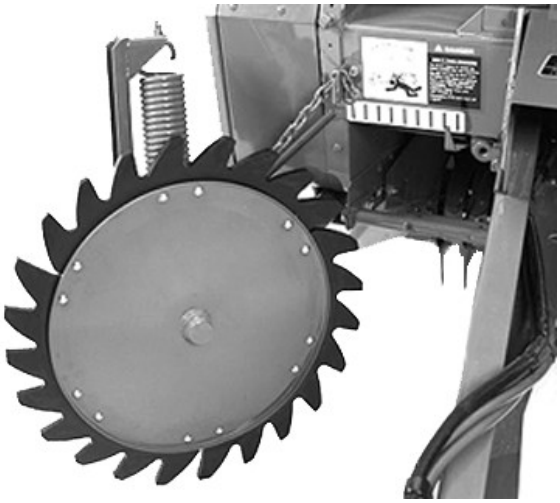

E40020—UN—29MAY96

Gathering wheels are mounted on each side of baler at the front of the pickup to help reduce crop loss in uneven windrows. The wheels have a special feature to minimize damage from hitting obstructions.

DP99999,0000E17-19-07SEP17

Bale Push Bar

E85559—UN—22NOV17

560M Baler Shown

Operates mechanically with the rear gate to assure dependable operation.

Two long spring-loaded arms and a center bar push the bale rearward with a positive force to ensure clearance for closing the gate.

Push bar arms remain extended until gate is closed to prevent the bale from rolling back into the gate toward baler.

Push bar arms can be easily locked out if operation is not desired.

SF04007,0001048-19-22NOV17

CoverEdge™ Surface Wrap Unit

E83991—UN—01AUG17

The CoverEdge™ Surface Wrap Unit wraps the outer surface of the bale for a smooth, weather resistant surface. The surface wrap unit increases baler

MegaWide is a trademark of Deere & Company

CoverEdge is a trademark of Deere & Company

productivity and improves the ability to retain higher hay quality in storage.

Wrap time is reduced to only two turns of the bale (approximately six seconds or less), reducing the loss of leaves and short material. Complete wrap and ejection time for full-size bales is approximately 20 seconds or less.

Twine is not required when using surface wrap. The net material clings to itself and holds the bale.

The operator can select twine or surface wrap application conveniently from the tractor seat using the BaleTrak™ monitor-controller.

The rolls of surface wrap are easily loaded into the unit at the rear of the baler.

DP99999,0000D9A-19-01AUG17

Hydraulic Pickup Lift

E66778—UN—17JUL12

The hydraulic pickup lift allows operator to lift pickup for transport from the tractor seat. Hydraulic lines attach to tractor hydraulic system. Tractor must be equipped with a second set of hydraulic outlets.

The baler pickup lift crank allows pickup to return to a preset height when pickup is lowered.

PP98408,0001063-19-11FEB13

Variable Core Valve

E40056—UN—04JUN96

Reduces hydraulic pressure for easier bale starts in difficult conditions.

Reduces core density and is adjustable for soft core size.

Operator can engage, disengage, or adjust conveniently from the tractor seat using the BaleTrak™ Pro monitor-controller.

PP98408,0001064-19-11FEB13

BaleTrak™ Pro or Plus Monitor-Controller

E52436—UN—16JUN03

A second monitor-controller can be ordered for installation on a second tractor, if desired.

DP99999,0000D9B-19-29JUN17

BaleTrak™ Pro or Plus Monitor-Controller Mounting Brackets

E40571—UN—22JUN96
For ComfortGard™ Operator Station

E40572—UN—22JUN96
For Sound-Gard™ Operator Station

Required for installation of the monitor-controller on 6000, 7000, and 8000 Series tractors with the ComfortGard™ operator station, and for John Deere tractors with the Sound-Gard™ operator station.

DP99999,0000D9C-19-07SEP17

Mounting Kit For Open Station 6000 and 7000 Series Tractors

E40573—UN—22JUN96

Required for installation of BaleTrak™ Pro monitor-controller.

PP98408,0001067-19-11FEB13

ComfortGard is a trademark of Deere & Company
Sound-Gard is a trademark of Deere & Company

Ten Ball Twine Storage

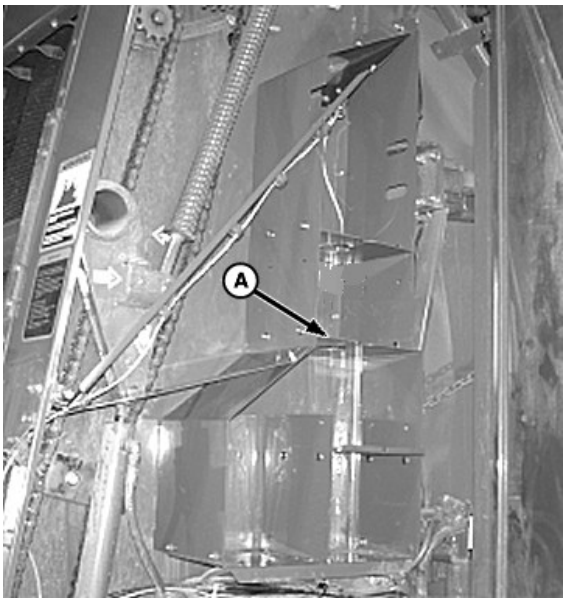

E54733—UN—30JUN06

A—Shelf (2 used)

Provides (five) twine ball 210 mm (8-1/4 in.) maximum height storage per side.

Order (two) shelves (A), eight M8 x 16 round-head bolts, and eight M8 flange nuts from your John Deere dealer.

(See CONVERT TWINE BALL STORAGE in Preparing the Baler section.)

PP98408,0001068-19-11FEB13

Belt Lacing Tool

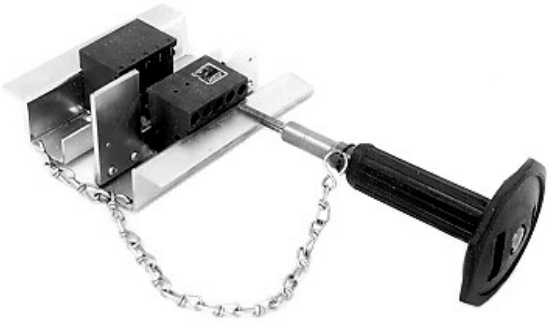

E39821—UN—21MAR96

The belt lacing tool is used for repairing failed splices or for splicing broken belts. The tool creates tight, even spacing of segments when repairing belts.

For further information or to order the belt lacing tool, see your John Deere dealer.

DP99999,0000DC0-19-01AUG17

Skiving Tool

E39822—UN—21MAR96

Enables easy removal of rubber layers on belts in preparation for belt splicing.

PP98408,000106A-19-11FEB13

Electrical Outlet Socket

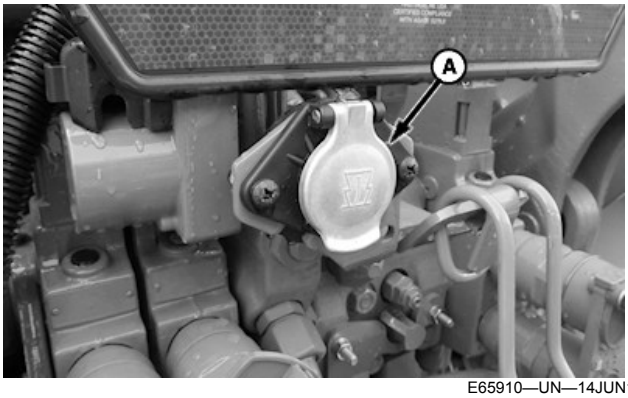

E65910—UN—14JUN12

A—Seven-Terminal Auxiliary Outlet Socket

This seven-terminal auxiliary outlet socket (A) can be installed on tractors to plug in electrical equipment such as the tail or warning light plug.

PP98408,000106B-19-11FEB13

Extended Rear-View Mirror

E63790—UN—15JUN12

To improve visibility of traffic behind the baler, an extended mirror is recommended. See your John Deere dealer.

PP98408,000106C-19-11FEB13

Right-Hand Rear-View Mirror

E63789—UN—15JUN12

Install mirror on right-hand side of tractor to see bale shape indicators and bale size indicator while baling.

PP98408,000106D-19-11FEB13

Slip Clutch Alert System

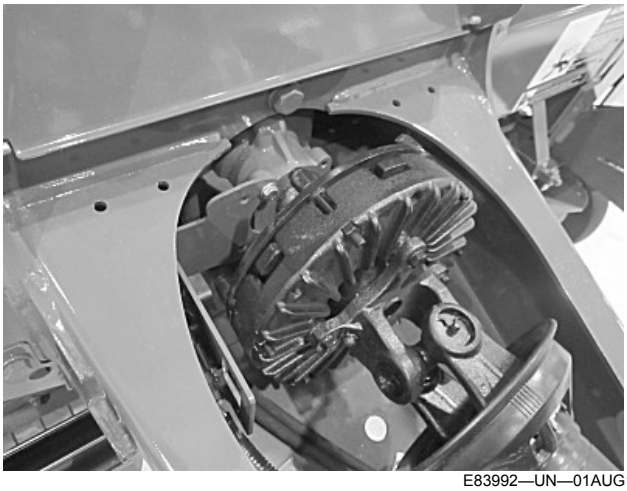

E83992—UN—01AUG17

This system alerts the operator by an alarm when either the main PTO drive sensor or the drive roll sensor detects one of the clutches slipping.

The speed compensation program applies the desired twine spacing or net wrap layers regardless of PTO speed. It uses the main drive (PTO) speed sensor to adjust either the twine or the net application functions to maintain settings when the baler is operated at speeds different than the rated PTO speed.

DP99999,0000DC1-19-17AUG17

Crop Deflector Kit

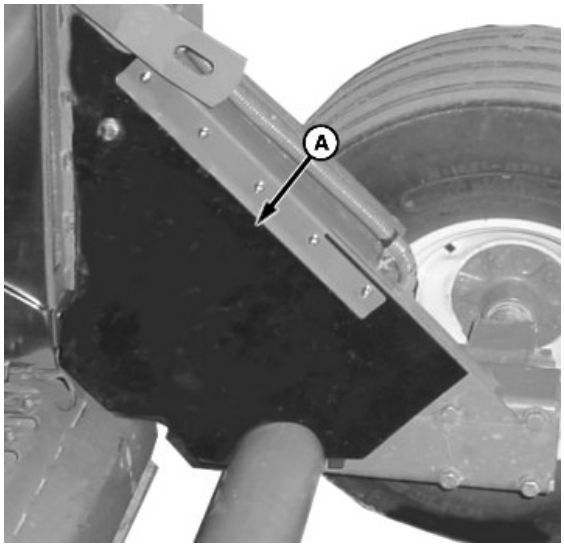

E54424—UN—10OCT05

A—Crop Deflector

NOTE: The crop deflector kit is available for installation on machines equipped with a regular pickup.

Crop deflectors (A) help prevent crop buildup in the corners of the baler.

DP99999,0000CFE-19-08AUG17

Fire Extinguisher

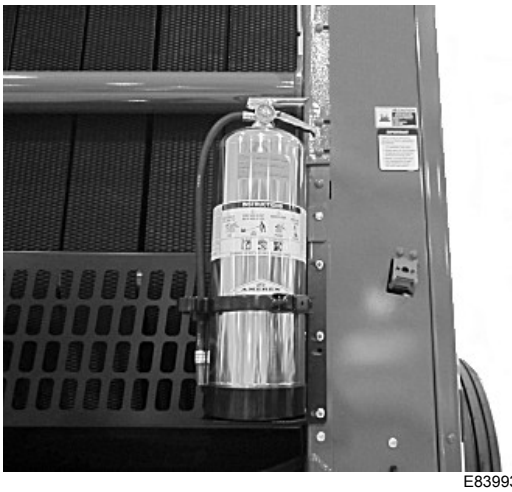

E83993—UN—06NOV17

An optional 9.5 L (2-1/2 gal) pressurized-water fire extinguisher can be mounted in the holes that are provided on the baler. (See your John Deere dealer.)

DP99999,0000DC2-19-01AUG17

Wear Liner Kit

If baling in abrasive soils (sandy) or crops (for example cornstalks, peanut hay, straw, and soybean stubble) wear liners will extend life of side sheets.

E57083—UN—04MAY09

Main-Frame Wear Panel Shown

E57084—UN—04MAY09

Gate-Frame Wear Panel Shown

PP98408,0001071-19-11FEB13

Silage Auger Kit

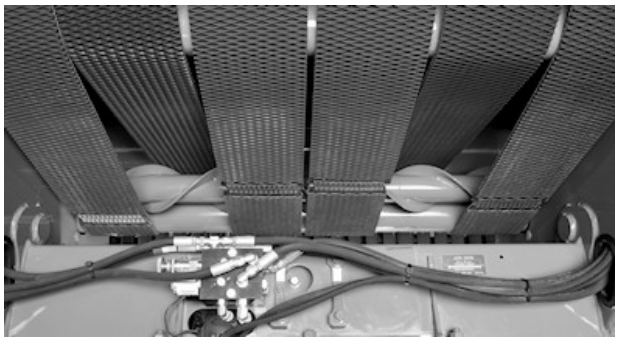

E64704—UN—09MAY12

In dry, fluffy crop conditions, this auger kit prevents crop from climbing the front of baler belts.

The silage kit prevents wet crop buildup on rollers and belts. The kit consists of a scraper knife for the starter roll and a chain-driven auger for the front staggered roll.

The Auxiliary Take-up Roll kit is recommended in conjunction with the silage auger kit

PP98408,0001072-19-11FEB13

Auxiliary Take-up Roll

E66782—UN—17JUL12

The auxiliary take-up roll is used on conditions where trash buildup is a problem. The auxiliary take-up roll starts the belts turning sooner as the gate closes to reduce trash accumulation inside the baler.

It also tensions the belts sooner to reduce belt twisting or belt turnover in windy or side hill conditions.

PP98408,0001073-19-11FEB13

Cornstalk Feeding Enhancement Kit (560M Only)

E67581—UN—28AUG12

The cornstalk compressor rack is designed to improve the feeding of fluffy cornstalk windrows into the baler. The cornstalk compressor rack offers a full complement of compressor rods and utilizes a solid steel shaft to attach the compressor rods, which serves two purposes:

- The shaft withstands the abrasive tough conditions that cornstalk baling demands.
- The solid shaft adds additional weight to the compressor rack, helping compress stalks and leaves against the pickup.

This heavy-duty rack is designed for use on 5 ft wide balers. The conventional compressor rack must be reinstalled when baling other crops.

DP99999,0000D96-19-20SEP17

Pickup Filler Plates for Cornstalks (560M MegaWide™ Plus Pickup Only)

E60882—UN—22FEB12

Pickup filler plates are now available for MegaWide™ Plus pickups. The filler plates are designed to prevent corn cobs from becoming lodged in pickup strippers. Adding filler plates to a MegaWide™ Plus pickup improves pickup tooth and rotor tine reliability.

Utilization of the corn cob filler plates improves machine reliability in crops with high concentration of cobs and will not affect machine performance in other crop conditions.

DP99999,0000DC3-19-01AUG17

Grease Bank System

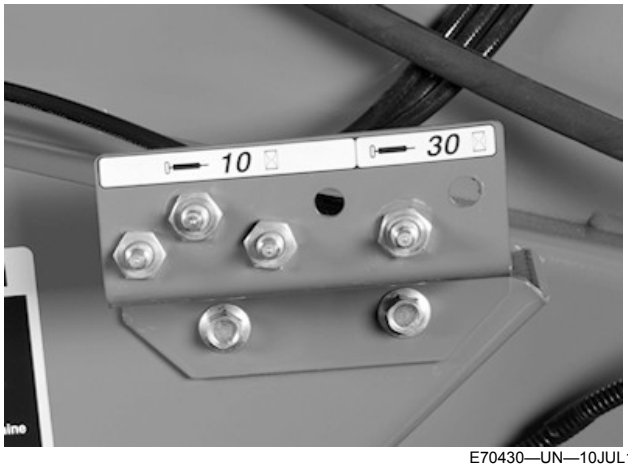

E70430—UN—10JUL13

Provides convenient location of grease points. Proper lubrication will assure smoother operation and longer machine life of critical wear points.

See your John Deere dealer.

PP98408,000047D-19-10JUL13

Allied Equipment

The following Allied equipment is available for the baler from your John Deere dealer:

- Preservative applicator
- Baler's Choice Preservative
- Baler Twine
- Rolls of Net Wrap
- Automatic Chain Oiler
- Net Wrap Light Kit

PP98408,0001076-19-11FEB13

Lubricating and Maintaining Machine Safely

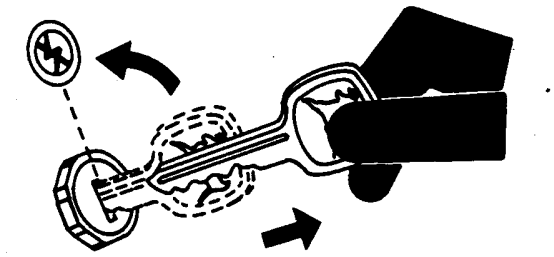

TS230—UN—24MAY89

CAUTION: To help prevent personal injury caused by unexpected movement, be sure to service machine on a level surface.

Do not lubricate or maintain the machine while it is in motion.

If machine is connected to tractor, engage tractor park brake and place transmission in Park, shut off engine and remove key.

If machine is detached from tractor, block wheels to prevent movement.

PP98408,0001077-19-11FEB13

Grease

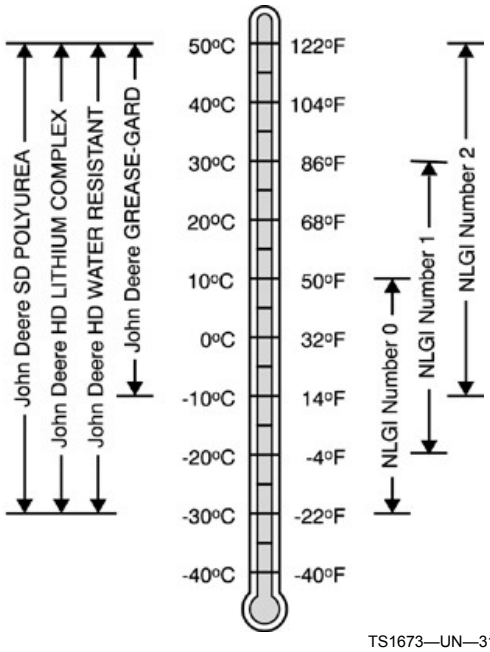

TS1673—UN—31OCT03

Greases for Air Temperature Ranges

Use grease based on NLGI consistency numbers and the expected air temperature range during the service interval.

John Deere SD Polyurea Grease is preferred.

The following greases are also recommended:

- John Deere HD Lithium Complex Grease
- John Deere HD Water Resistant Grease
- John Deere GREASE-GARD™

Other greases can be used if they meet NLGI Performance Classification GC-LB.

IMPORTANT: Some types of grease thickeners are not compatible with others. Consult your grease supplier before mixing different types of grease.

DP99999,0000D7E-19-13JUN17

Gear Case Oil

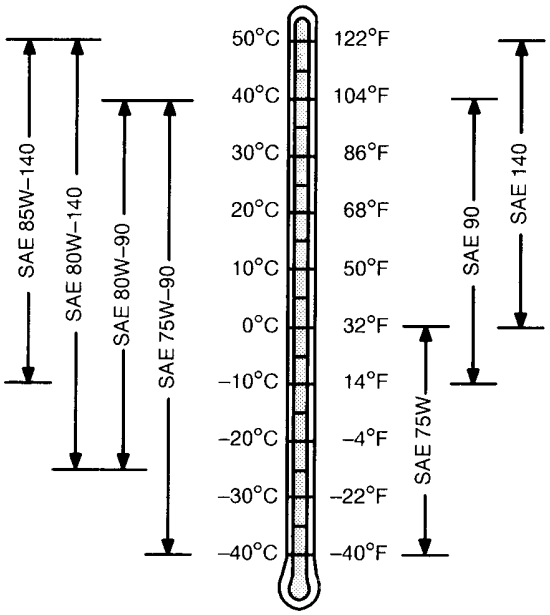

TS1653—UN—14MAR96

Use oil viscosity based on the expected air temperature range during the period between oil changes.

The following oils are preferred. Other oils can be used if they meet API Service Category GL-5.

- John Deere GL-5 GEAR LUBRICANT
- John Deere Extreme-Gard™

DP99999,0000D7F-19-13JUN17

GREASE-GARD is a trademark of Deere & Company
Extreme-Gard is a trademark of Deere & Company

Alternative and Synthetic Lubricants

Conditions in certain geographical areas may require lubricant recommendations different from those printed in this manual.

Some John Deere brand coolants and lubricants may not be available in your location.

Consult your John Deere dealer to obtain information and recommendations.

Synthetic lubricants may be used if they meet the performance requirements as shown in this manual.

The temperature limits and service intervals shown in this manual apply to both conventional and synthetic lubricants.

Re-refined base stock products may be used if the finished lubricant meets the performance requirements.

PP98408,000107A-19-11FEB13

Observe Lubrication Symbols

&lubsym; Lubricate with John Deere EP Moly or an equivalent SAE multipurpose-type grease (unless otherwise specified) at hourly intervals indicated on the symbols.

&oilsym; Lubricate with SAE 30 or heavier oil at hourly intervals indicated on the symbols.

&brusym; Brush periodically with John Deere EP Moly or an equivalent SAE multipurpose-type grease.

PP98408,000107B-19-11FEB13

Perform Lubrication and Maintenance

CAUTION: Do not clean, lubricate, or adjust machine while it is in motion.

IMPORTANT: The maintenance intervals recommended are based on normal conditions. Severe or unusual conditions can require more frequent lubrication.

Perform each lubrication and service illustrated in this section at the beginning of the season and at the end of the season.

Clean lubrication fittings before using grease gun. Replace lost or broken fittings immediately. If a new fitting fails to take grease, remove and check for failure of adjoining parts.

PP98408,000107C-19-11FEB13

Fire Prevention

Keep foreign material from building up on the machine near potentially hot areas, such as bearings on the ends of baler rolls and slip-clutch. Remove this buildup as part of the regular service operations and at the end of each use.

Leaf blowers, blower-vacuums, or similar devices can be used to remove loose crop buildup. Compressed air can be used to remove more difficult buildup.

Avoid high-pressure power-washing next to the bearings to prevent damaging seals.

Regularly check bearings for early signs of failure, and replace as indicated. Turn off power to baler and check for unusual noises, hot parts, smells of scorching, and discolored paint or metal. To check condition of bearings:

- Open gate and lock it.
- With the belts slackened, rotate each of the rollers by hand, paying attention to dry or grinding noises, or rough rotation.
- Push, pull, or gently pry to check bearing radial play.
- Watch and feel for looseness in the bearings.

Soon after operation, the temperature at each bearing location can be checked to see if it is noticeably hotter than the others. Replace worn or damaged bearings.

PP98408,000107D-19-11FEB13

As Required - Belt Pins

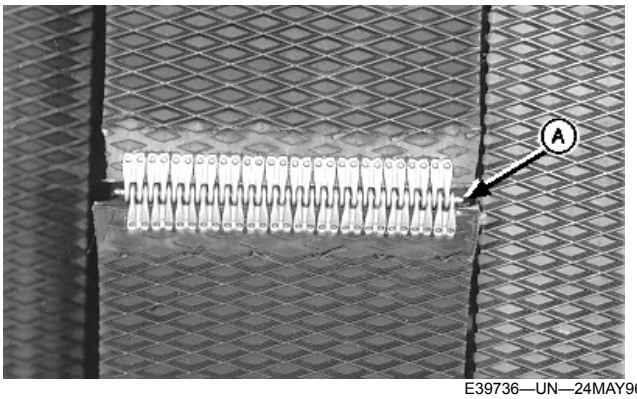

E39736—UN—24MAY96

A—Pins

Check pins (A) for wear or damage every 2000 bales (every 1000 bales in sandy conditions), otherwise broken pins are difficult to remove. Replace pins if broken, or if more than one-third of pin thickness is worn. Do not deform ends of pins when installing new ones.

To remove pin, grip pin with pliers and turn 90 degrees (1/4 turn) before pulling or tapping out.

PP98408,000107E-19-11FEB13

As Required - Tension Arm Wear Channels

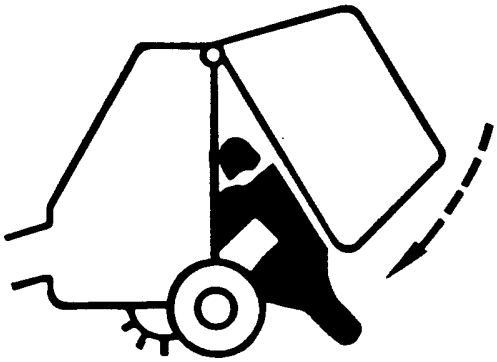

TS698—UN—21SEP89

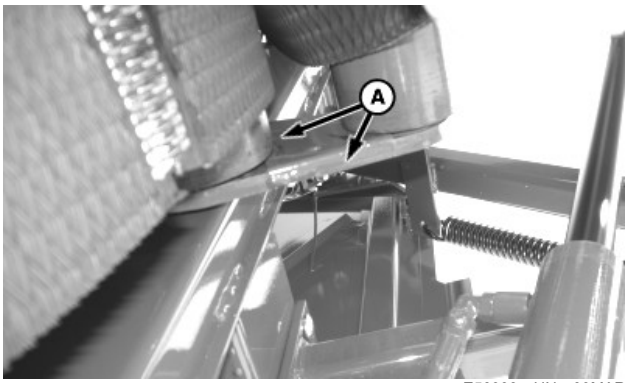

E56903—UN—09MAR09

A—Groove

Check wear channels for groove depth every 5000 bales (every 2500 bales in sandy conditions).

CAUTION: To avoid injury or death caused by unexpected lowering of the gate, engage gate lock before working on, around, or under gate in raised position.

IMPORTANT: Excessive grooves worn into wear channel and tension arm will increase belt edge wear and can wear through tension arm.

To check for groove depth in wear channels:

1. Fully raise and lock gate.
2. If groove depth (A) exceeds specifications, repair or replace wear channels and tension arm. See your John Deere dealer.

Specification	
Maximum Groove Depth Worn Into Wear Channel and Tension Arm—Depth	3 mm (1/8 in.)

3. Repeat on opposite side.

PP98408,000107F-19-11FEB13

After First 50 Hours

Gear Case (MegaWide™ Plus Pickup)

Drain and refill the gear case in the MegaWide™ Plus pickup after the first 50 hours of operation and once each season thereafter.

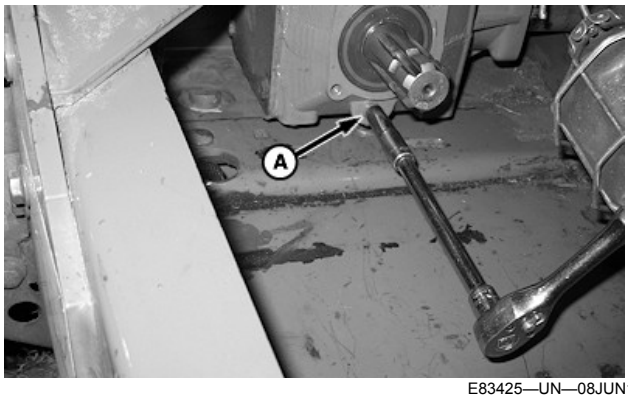

E83425—UN—08JUN17

Gear Case Drain Plug (MegaWide™ Plus Pickup)

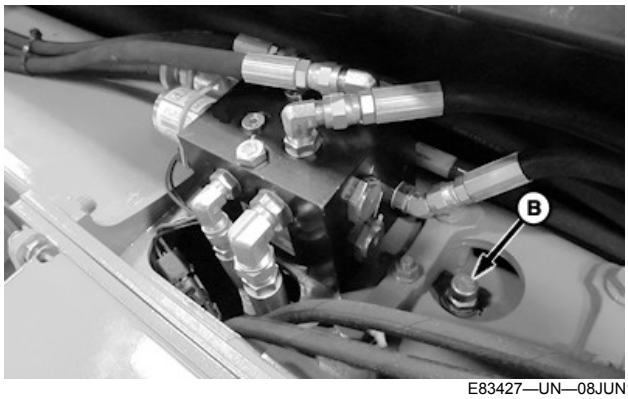

E83427—UN—08JUN17

Gear Case Dipstick (MegaWide™ Plus Pickup)

A—Drain Plug
B—Dipstick

NOTE: Driveline removed for illustration purposes.

1. Remove the drain plug (A) and drain oil into a suitable container. Dispose of oil properly.
2. Install the drain plug.

IMPORTANT: Do not over-fill the gear case. Over-filling results in over-heating and oil leakage.

3. Remove the dipstick (B) and refill the gear case using SAE 85-140 API GL-5 gear lubricant.

Specification	
Gear Case—Capacity	1.2 L (1.25 qt)

4. Install the dipstick and check the lubricant level. Lubricant must fall between the grooves on the dipstick.

MegaWide is a trademark of Deere & Company

5. When the lubricant is at the proper level, tighten the dipstick to specification.

Specification

Dipstick—Torque. . . . . 29 N·m (21 lb·ft)

Gear Case (MegaWide™ HC2 Pickup)

Drain and refill the gear case after the first 50 hours of operation and once each season thereafter.

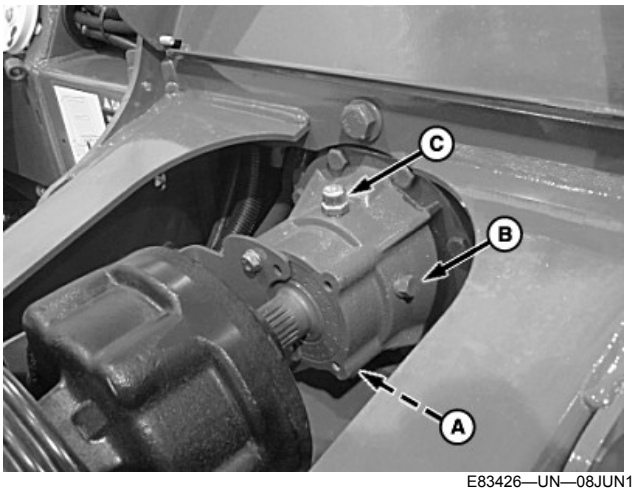

E83426—UN—08JUN17

Gear Case (MegaWide™ HC2 Pickup)

A—Drain Plug
B—Check Plug
C—Fill Plug

1. Remove the drain plug (A), check plug (B), and fill plug (C) and drain oil from the gear case.
2. Install the drain plug and clean up any spilled oil.

IMPORTANT: Do not over fill the gear case. Overfilling results in overheating and oil leakage.

3. Refill the gear case using SAE 85-140 API GL-5 gear lubricant until oil reaches the check plug port.

Specification

Gear Case—Capacity. . . . . 1.2 L (1.25 qt)

4. Install and tighten the check plug.
5. Install and tighten the fill plug.

DP99999,0000D7B-19-08NOV17

Every 10 Hours

Chains

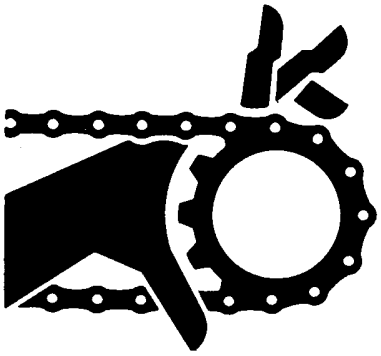

TS284—UN—23AUG88

CAUTION: To help prevent injury, do not lubricate chains with machine running.

Liberally apply SAE 30 or heavier oil to chains every 10 hours of operation.

Lubricate chains immediately after operation when the chains are still warm. Let the machine stand idle for a short period to ensure effective oil penetration, resulting in longer chain life.

Tension Arm Pivots

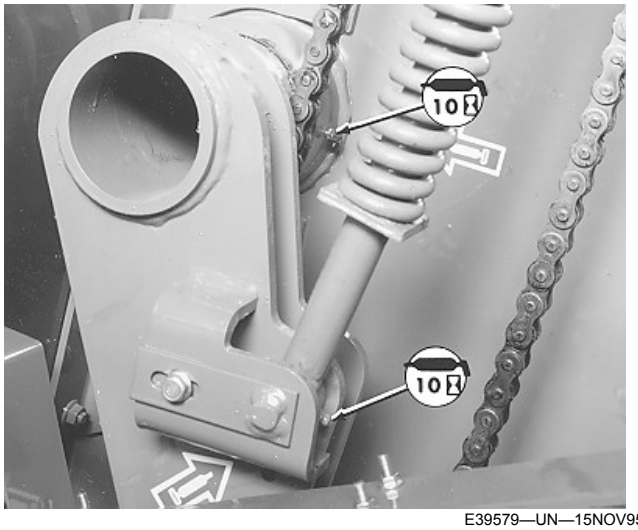

E39579—UN—15NOV95

Tension Cylinder Rods

E39583—UN—15NOV95

Gathering Wheels and Support Pivot (If Equipped)

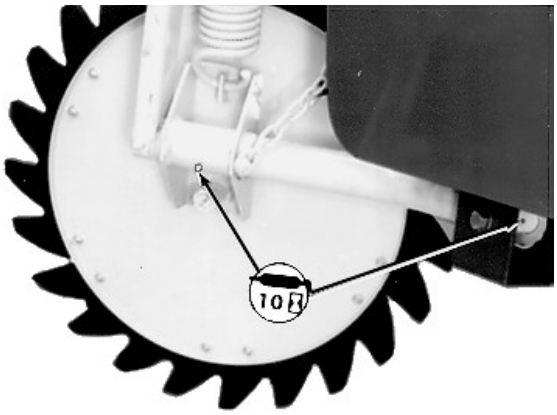

E39589—UN—30JUN99

Push Bar Shock Absorber and Spring Bolt (If Equipped)

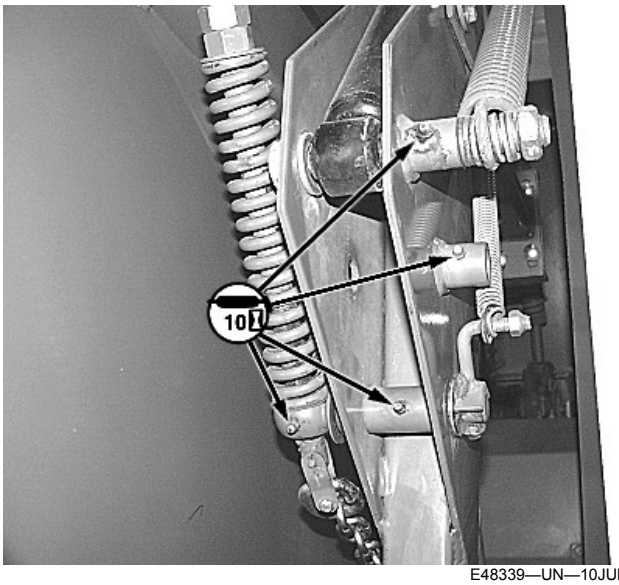

E48339—UN—10JUL00

PP98408,0001081-19-11FEB13

Every 30 Hours

PTO Driveline (Regular and MegaWide™ Plus Pickup)

IMPORTANT: Regular greasing with the proper amount of grease is important for maintaining driveline life and quiet operation.

Use only John Deere Polyurea grease.

Lubricate fittings (A—G) with the amount of grease listed after every 30 operating hours. Only use John Deere SD Polyurea Grease.

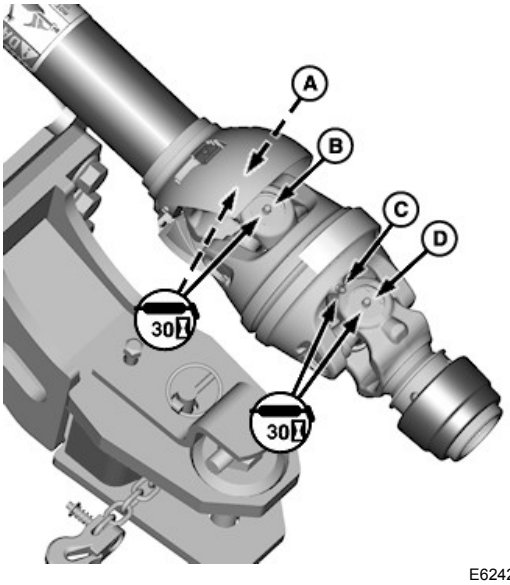

E62422—UN—09AUG12

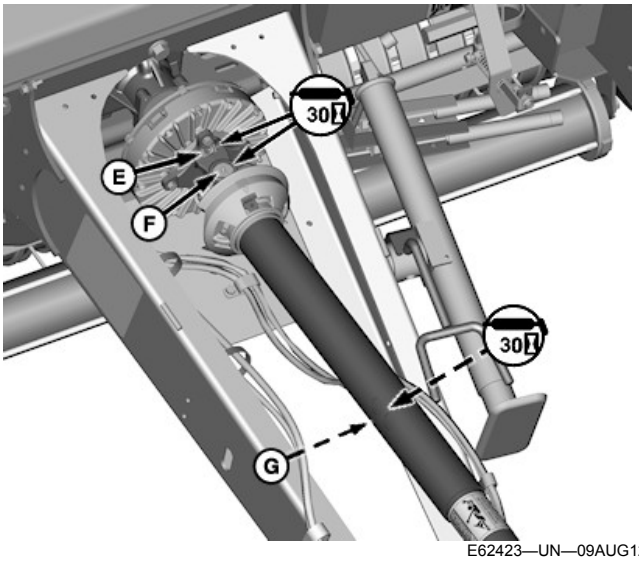

E62423—UN—09AUG12

A—Fitting (5 pumps)
B—Fitting (5 pumps)
C—Fitting (30 pumps)
D—Fitting (5 pumps)
E—Fitting (5 pumps)
F—Fitting (5 pumps)
G—Fitting (10 pumps)

PTO Driveline (MegaWide™ HC2 Pickup Only)

IMPORTANT: Regular greasing with the proper amount of grease is important for maintaining driveline life and quiet operation.

NOTE: Raise the PTO shield to access fitting (E). Release latches and slide the center shield cone back to access fitting (F).

Lubricate fittings (A—G) with the amount of grease listed after every 30 operating hours. Only use John Deere SD Polyurea Grease.

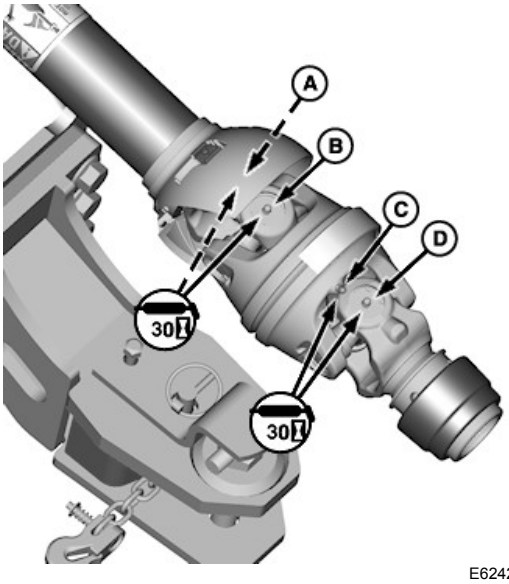

E62422—UN—09AUG12

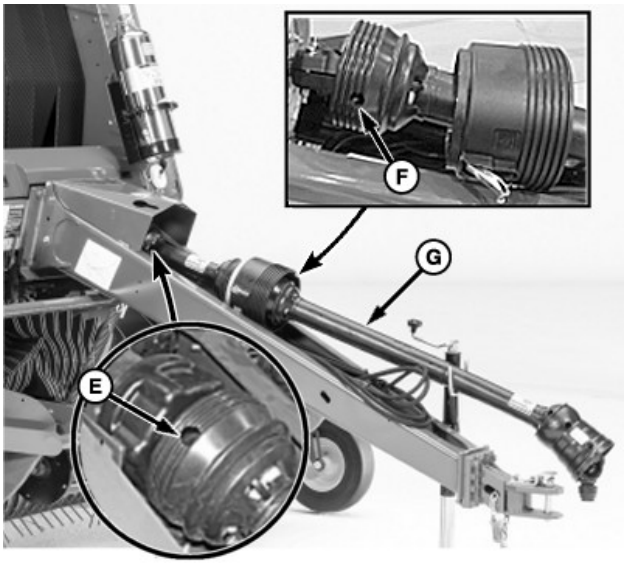

E83514—UN—10AUG17

A—Fitting (5 pumps)
B—Fitting (5 pumps)
C—Fitting (30 pumps)
D—Fitting (5 pumps)
E—Fitting (5 pumps)
F—Fitting (5 pumps)
G—Fitting (10 pumps)

Pickup Lift Crank

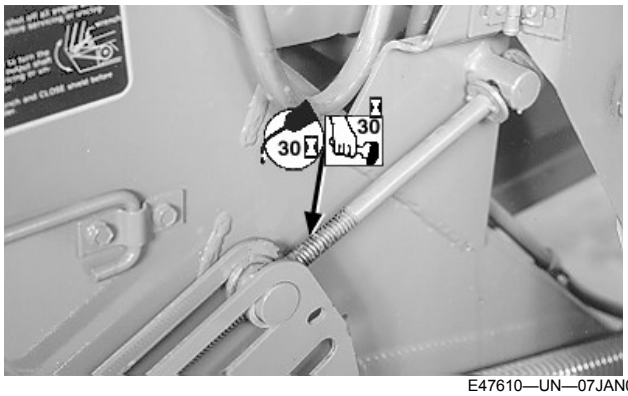

E47610—UN—07JAN00

Pickup Lift Crank Threads

Lubricate crank threads with SAE 30 or heavier oil, or with John Deere EP Moly or an equivalent SAE multipurpose grease.

Twine Arms and Twine Actuator Rod

CAUTION: Twine arms can move unexpectedly. Keep hands out of the twine arm path to avoid crushing. Turn off power BEFORE servicing or adjusting twine arms or twine cutter mechanism.

Stay out of the path of twine arms at all times when power to twine arm is ON.

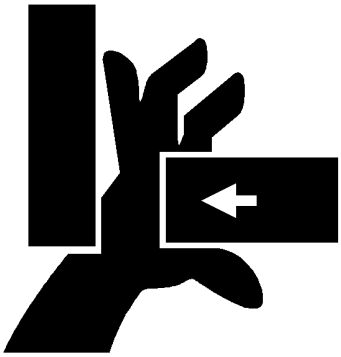

E47598—UN—07JAN00

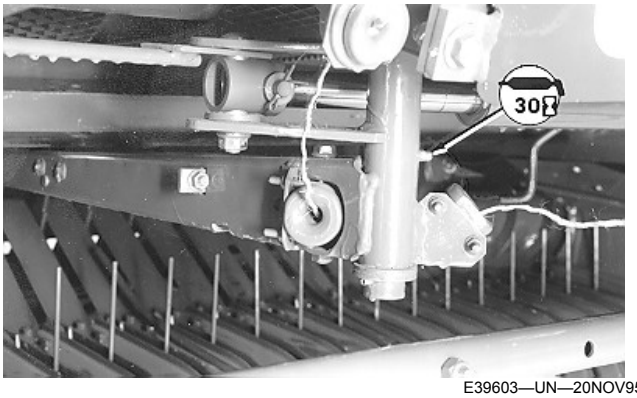

E39603—UN—20NOV95

460M

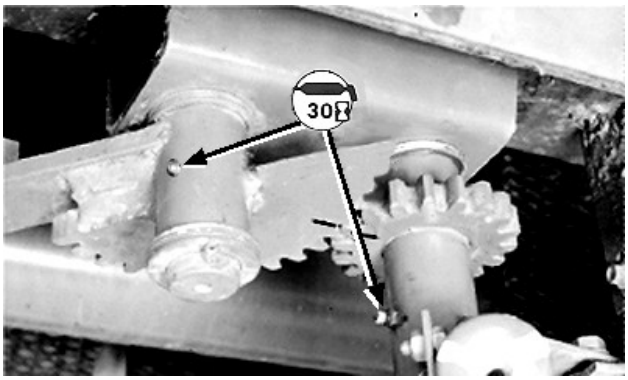

E39777—UN—22FEB96

560M

Clean off foreign material or crop buildup from actuator rod.

Pickup Drive Idler Pivot

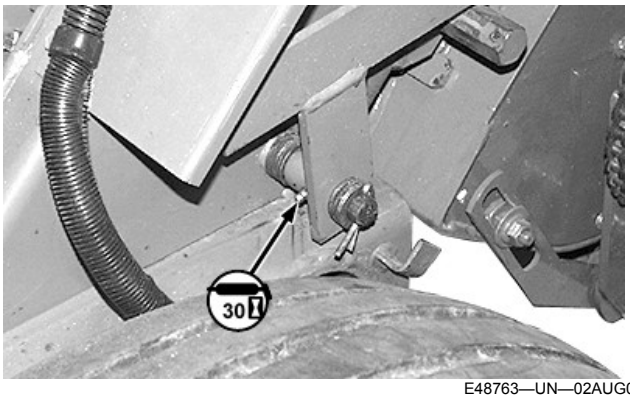

E48763—UN—02AUG00

Right-Hand Side

NOTE: Shield removed for clarity.

COVER-EDGE™ Net Wrap Counterknife Arm Pivot (If Equipped)

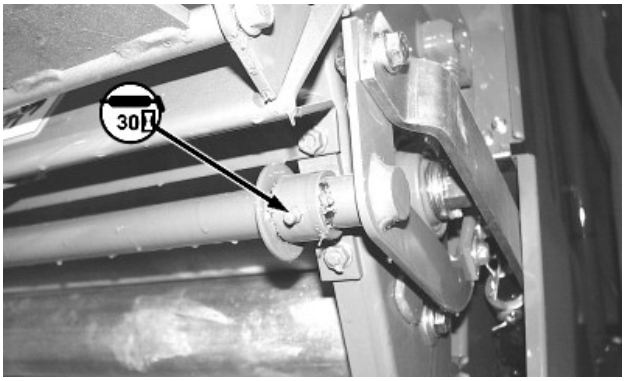

E48340—UN—12JUL00

Right-Hand Side Shown

IMPORTANT: Do not over-lubricate the counterknife arm pivot. Over-lubrication results in grease getting onto the rubber roll, causing wrappage.

Lubrication fittings are on both left and right-hand sides.

Pickup Idler Arm

E61069—UN—16AUG12

Right-Hand Side

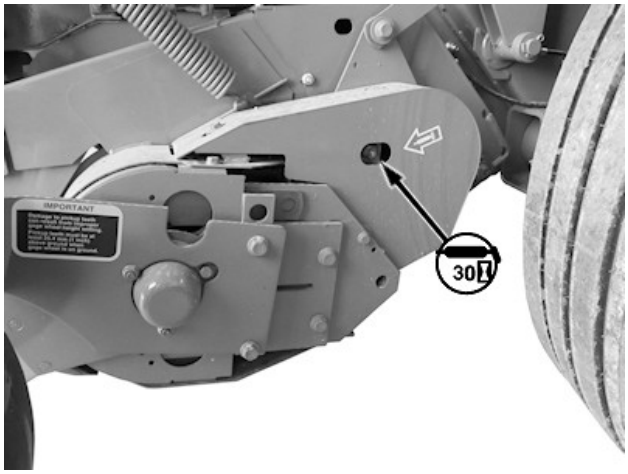

E61070—UN—16MAR12

Left-Hand Side

Pickup Lift Bellcrank Pivot

E61081—UN—16MAR12

Left-Hand Side

DP99999,0000D1A-19-20SEP17

Every 100 Hours

Gear Case (MegaWide™ Plus Pickup)

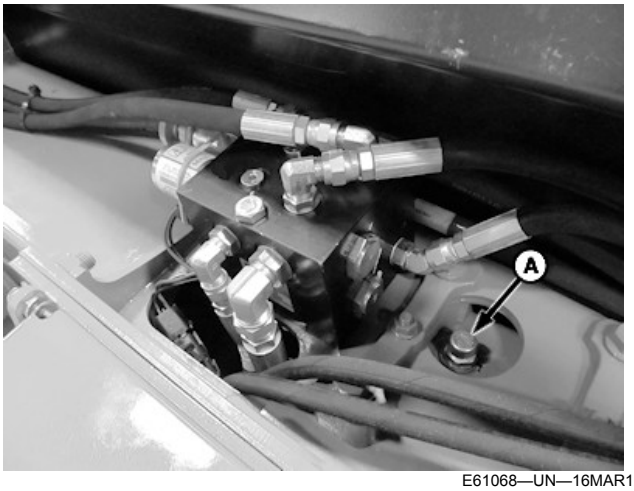

E61068—UN—16MAR12

Gear Case Dipstick (MegaWide™ Plus Pickup)

A—Dipstick

1. Check lubricant level with dipstick (A). Lubricant must fall between the grooves on the dipstick.

IMPORTANT: Do not overfill the gear case. Overfilling results in overheating and oil leakage.

2. Refill as necessary using SAE 85-140 API GL-5 gear lubricant. Drain and refill the gear case once each season.

Specification

Gear Case—Capacity. . . . . 1.2 L (1.25 qt)

3. Install the dipstick and tighten to specification.

Specification

Dipstick—Torque. . . . . 29 N·m (21 lb·ft)

Gear Case (MegaWide™ HC2 Pickup)

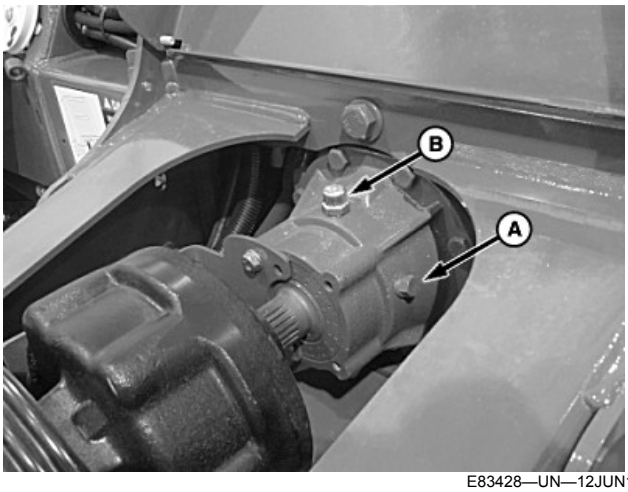

E83428—UN—12JUN17

Gear Case (MegaWide™ HC2 Pickup)

A—Check Plug
B—Fill Plug

1. Remove the check plug (A) and check the lubricant level.

IMPORTANT: Do not overfill the gear case. Overfilling results in overheating and oil leakage.

2. If necessary, remove the fill plug (B) and add SAE 85-140 API GL-5 gear lubricant until oil level reaches the check plug port.
3. Install and tighten the check plug.
4. Install and tighten the fill plug.

DP99999,0000D7C-19-08NOV17

Annually

Baler Wheel Bearings and Gathering Wheel Bearings (If Equipped)

E62049—UN—30MAR12

Remove the wheels; then clean, repack, and adjust bearings. Use John Deere EP Moly or an equivalent

MegaWide is a trademark of Deere & Company

SAE multipurpose type grease, or wheel bearing grease.

Net Wrap Actuator (If Equipped)

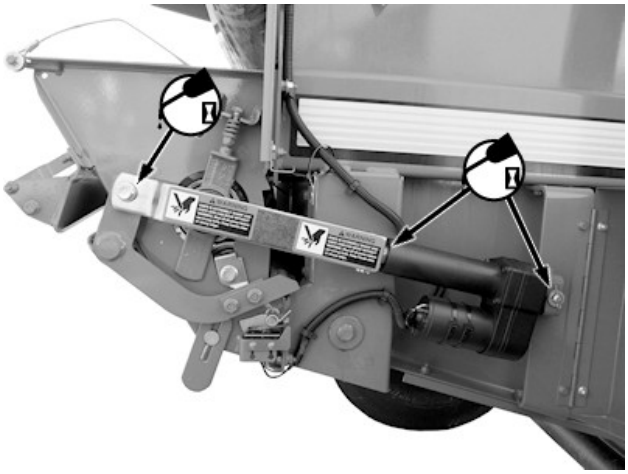

E61071—UN—16MAR12

Right-Hand Side

Lubricate rod end and base end actuator and link mounting pins with SAE 30 or heavier oil.

Gear Case (MegaWide™ Plus Pickup

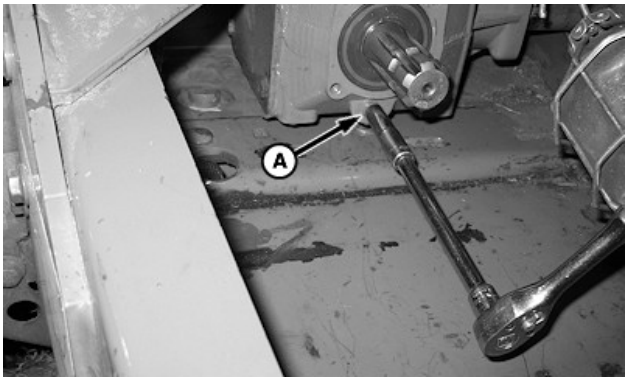

E83425—UN—08JUN17

Gear Case Drain Plug (MegaWide™ Plus Pickup)

E83427—UN—08JUN17

Gear Case Dipstick (MegaWide™ Plus Pickup)

A—Drain Plug
B—Dipstick

MegaWide is a trademark of Deere & Company

NOTE: Driveline removed for illustration purposes

1. Remove the drain plug (A) and drain oil into a suitable container. Dispose of oil properly.
2. Install the drain plug.

IMPORTANT: Do not overfill the gear case. Overfilling results in overheating and oil leakage.

3. Remove the dipstick (B) and refill the gear case using SAE 85-140 API GL-5 gear lubricant.

Specification

Gear Case—Capacity. . . . . 1.2 L (1.25 qt)

4. Install the dipstick and check the lubricant level. Lubricant must fall between the grooves on the dipstick.
5. When the lubricant is at the proper level, tighten the dipstick to specification.

Specification

Dipstick—Torque. . . . . 29 N·m (21 lb·ft)

Gear Case (MegaWide™ HC2 Pickup)

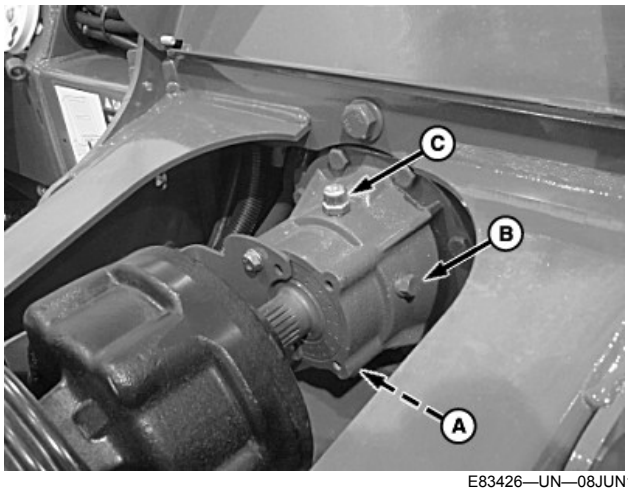

E83426—UN—08JUN17

Gear Case (MegaWide™ HC2 Pickup)

A—Drain Plug
B—Check Plug
C—Fill Plug

1. Remove the drain plug (A), check plug (B), and fill plug (C). Drain the oil from the gear case.
2. Install the drain plug and clean up any spilled oil.

IMPORTANT: Do not overfill the gear case. Overfilling results in overheating and oil leakage.

3. Refill the gear case using SAE 85-140 API GL-5 gear lubricant until oil reaches the check plug port.

Specification	
Gear Case—Capacity	1.2 L (1.25 qt)

4. Install and tighten the check plug.
5. Install and tighten the fill plug.

Gear Case Output Shaft U-Joint (MegaWide™ Plus Pickup)

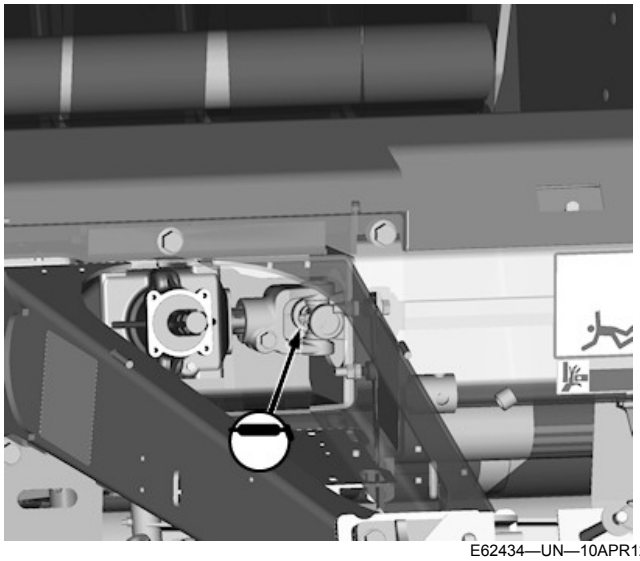

E62434—UN—10APR12

NOTE: Driveline and shields removed for illustration purposes.

Grease lubrication fitting annually or every 250 hours.

Gear Case Output Shaft U-Joints (MegaWide™ HC2 Pickup)

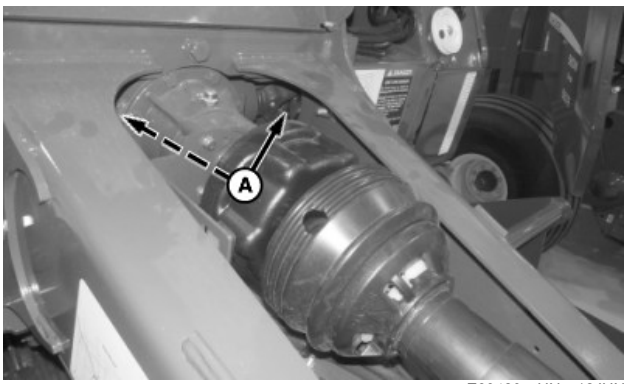

E83429—UN—12JUN17

MegaWide™ HC2 Gear Case

Grease lubrication fittings (A) annually or every 250 hours.

Third Roll Drive Clutch

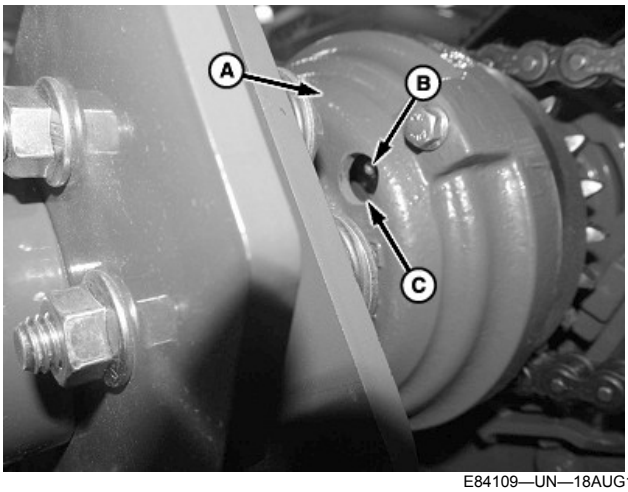

E84109—UN—18AUG17

Third Roll Drive Clutch

A—Clutch Hub
B—Lubrication Fitting
C—Hole (3 used)

1. Rotate the output shaft on the left-hand side of the baler to align one of the holes (C) in the clutch hub (A) with the lubrication fitting (B).
2. Apply 5—10 pumps of grease.

DP99999,0000D9F-19-29SEP17

PTO Driveline Difficulties

Symptom	Problem	Solution
Driveline will not telescope correctly	Shield damaged.	Replace shield.
	Lack of lubrication.	Clean and lubricate.
	Tractor drawbar not installed correctly.	Check dimensions. Install drawbar correctly.
	Driveline bent or twisted.	Replace.
	Telescoping splines galled or worn.	Replace shaft and tube as necessary. Apply John Deere Polyurea Grease.
Driveline vibrates excessively	Balls or sockets worn.	Replace worn or damaged parts. Apply John Deere Polyurea Grease.
	Driveline bent or twisted.	Replace.
	Driveline cross bearings worn.	Replace bearings.
	Constant velocity joint worn or damaged.	Replace worn or damaged parts.
	Splines on tractor shaft worn.	Replace tractor shaft.
Driveline will not stay engaged	Splines on yoke worn.	Replace yoke.
	Worn pawls.	Replace parts.

DP99999,0000DF4-19-10AUG17

Main Drive Friction Slip Clutch

Symptom	Problem	Solution
Clutch does not slip	Distance between rear plate and pressure plate is less than specifications.	Adjust clutch. (See Adjust Main PTO Driveline Slip Clutch in Service—Baler section.) Disassemble clutch and clean disk spring.
	Seized or rusted.	Slip the clutch. (See Slip Main PTO Driveline Slip Clutch in Service—Baler section.) Disassemble clutch and clean disk spring.
	Warped pressure plate or clutch disk.	Replace pressure plate or clutch disk. (See your John Deere dealer or qualified service provider.)
	Dirt and fine crop builds up between disk spring and pressure plate and does not allow spring to flatten. Drive protection is reduced.	Disassemble main clutch and remove dirt between disk spring and pressure plate whether adjusting or slipping clutch.

Symptom	Problem	Solution
	During procedure to slip main clutch, loosening cap screws allows disk spring to widen and fill with dirt. While tightening six cap screws, disk spring will not flatten in areas filled with dirt.	Disassemble main clutch and remove dirt between disk spring and pressure plate whether adjusting or slipping clutch.
Clutch slips excessively	Distance between rear plate and pressure plate is more than 7.1 mm (0.280 in).	Adjust clutch. (See Adjust Main PTO Driveline Slip Clutch in Service—Baler section.) Disassemble clutch and clean disk spring.
	Disk spring weak from overheating.	Replace disk spring.
	Worn friction disk.	Replace friction disk. (See your John Deere dealer or qualified service provider.)

DP99999,0000D9D-19-27OCT17

Main Drive Cam Clutch

Symptom	Problem	Solution
Clutch slips	PTO cam clutch disengages.	Disengage the tractor PTO, re-engage the tractor PTO, and resume baling.

SF04007,0000F98-19-18SEP17

Drive Chain Difficulties

Symptom	Problem	Solution
Prematurely failed drive chains	Lack of lubrication.	Lubricate chains, every 10 hours, after operation when chains are still warm. (See EVERY 10 HOURS in Lubrication and Maintenance section.)
	Operating too tight or too loose.	Adjust chain tension. (See ADJUST LOWER AND UPPER ROLL DRIVE CHAINS in Service—Baler section.)
	Misalignment of drive sprockets and idlers.	Align all sprockets and idlers. (See your John Deere dealer.)
	Main drive friction slip clutch does not slip.	Slip the clutch. (See SLIP MAIN PTO DRIVELINE SLIP CLUTCH in Service—Baler section.) Disassemble clutch and clean disk spring.

PP98408,0001087-19-11FEB13

Gear Case Difficulties

Symptom	Problem	Solution
Gear case noisy	Lack of lubricant.	Check and add fluid if necessary.

Symptom	Problem	Solution
	Loose or worn bearings.	See your John Deere dealer.
	Gears not meshing correctly.	See your John Deere dealer.
Gear case excessively hot (Over 105 °C [220 °F])	Oil level too high.	Operate with oil level at mark on dipstick.
	Lack of lubricant.	Check and add fluid if necessary.
	Defective bearings.	See your John Deere dealer.
	Bearings not installed correctly.	See your John Deere dealer.
	Bearings adjusted too tight.	See your John Deere dealer.
Leaking oil	Worn oil seals.	See your John Deere dealer.
	Missing or defective vent.	See your John Deere dealer.
	Oil level too high	Drain to correct level. Operate with oil level at proper place on dipstick. (See EVERY 100 HOURS in Lubrication and Maintenance section.)
Gears noisy or wear prematurely	Lack of lubrication.	Add oil to correct level or replace worn gears.

PP98408,0001088-19-11FEB13

Hydraulic Function Difficulties

Symptom	Problem	Solution
Baler will not feed; Hay plugged at feed opening.	Bale density is too high.	Turn adjustable relief valve knob counterclockwise to decrease density. (See Adjust Bale Density in Operating the Baler section.)
		Adjust variable (soft) core setting (if equipped). If not equipped, install variable core option.
		Check adjustable relief valve. Replace if defective. (See your John Deere dealer or qualified service provider.)
		Adjust variable core diameter (if equipped). (See procedure in Operating the Baler section.)
	Gate opens while baling due to internal leakage in system components.	Repair or replace leaking component. (See your John Deere dealer or qualified service provider.)

Symptom	Problem	Solution
Bale sticks in chamber.	New baler.	Reduce density until bales have worn paint off the side sheets. (See Adjust Bale Density in Operating the Baler section.)
		Follow break-in instructions in Operating the Baler section.
	Bale density too high.	Turn adjustable relief valve knob counterclockwise to decrease density. (See Adjust Bale Density in Operating the Baler section.)
		Check relief valve. Replace if defective. (See your John Deere dealer or qualified service provider.)
	Damp crop or buildup on side sheets.	Clean side sheets.
	Excessive side sheet friction.	Check straightness and straighten front side sheets of the baler if needed. (See your John Deere dealer or qualified service provider.)
	PTO not turned on while ejecting the bale.	Engage the PTO while ejecting the bale.
Bale density too low.	Faulty tension cylinder.	Repair cylinder if leaking. (See your John Deere dealer or qualified service provider.)
	Faulty relief valve.	Check relief valve. Replace if defective. (See your John Deere dealer or qualified service provider.)
	Damaged O-rings or backup rings on relief or check valves.	Replace. (See your John Deere dealer or qualified service provider.)
	Damaged seat or poppet in relief or check valves.	Replace. (See your John Deere dealer or qualified service provider.)
	Foreign material keeping check or relief valve poppet from seating.	Clean or replace. (See your John Deere dealer or qualified service provider.)
	Density control valve adjusted for light bales.	Adjust for heavier bale. (See Adjust Bale Density and Check Baler Performance in the Field in Operating the Baler section.)
	Dirty hydraulic oil in tractor.	Change tractor filter and oil.
	Belts stretched too long.	Measure belts and replace or shorten belts that are longer than maximum listed. (See Repair Belts in Service—Baler section.)

Symptom	Problem	Solution
Bale density control knob hard to turn.	Raised gate or belt tension arm causes additional turning resistance.	Adjust with the gate closed and the belt tension arm down.
	Dry thread on adjusting screw.	Apply a few drops of oil or a dry graphite lubricant to the threads.
	Locking ring locked against valve body.	Unscrew locking ring before adjusting density control knob. (See Adjust Bale Density in Operating the Baler section.)
Bale density low on one side.	Bale forming procedure incorrect.	Review Interpret Bale Shape Indicators in Operating the Baler section.
Bale density gauge reading in red.	Tractor selector valve (SCV) not in neutral position while baling.	Move hydraulic lever to neutral while baling.
	Defective density gauge.	Replace. (See your John Deere dealer or qualified service provider.)
	Adjustable relief valve set too high.	Adjust valve. (See Adjust Bale Density in Operating the Baler section.)
	Defective adjustable relief valve.	Replace valve. (See your John Deere dealer or qualified service provider.)
Gate opens while baling.	Tension gate cylinder extends when the gate is closed and the selector control valve (SCV) is in neutral.	Air in the hydraulic system. Open and close the gate several times to remove air. Faulty relief valve. (See your John Deere dealer or qualified service provider.)
	Tractor selector control valve (SCV) leaking.	Repair or replace. (See your John Deere dealer or qualified service provider.)
	Internal leak in the baler hydraulic system.	Repair. (See your John Deere dealer or qualified service provider.)
Gate will not close or lock.	Adjustable relief valve setting too low.	Turn adjustable relief valve knob clockwise to increase relief setting. (See Adjust Bale Density in Operating the Baler section.)
	Obstruction between gate and frame.	Remove obstruction.
	Hydraulic flow of tractor too low.	Adjust tractor hydraulic flow. (See your tractor Operator's Manual.) Add orifice to the bale tensioning valve. (See your John Deere dealer or qualified service provider.)

Symptom	Problem	Solution
	One or more of the orifices is plugged or not oriented correctly. The orifices are on the SCV coupler, the lower T in the valve block, and the gate lock valve.	Inspect and reassemble in the correct orientation.
Gate closes erratically.	4-to-1 check valve interchanged with 12-to-1 check valve.	Install the check valves in correct positions. (See your John Deere dealer or qualified service provider.)
	The orifice at the quick-disconnect (SCV) end of the small diameter hose is not installed correctly.	Reverse direction of orifice.
	Crop buildup on belts.	Remove buildup and operate the PTO while closing gate.

DP99999,0000DB1-19-22SEP17

Twine Wrap Difficulties

Symptom	Problem	Solution
Extend Or Retract switches will not move twine actuator. Stop indicator flashes.	Electric actuator does not have electrical power.	Check if twine arms move using bypass switch. If arms do not move, check tractor convenience outlet for blown fuse or defective circuit breaker. Replace fuse or circuit breaker if necessary. Check electric actuator connector for: •Proper connection •Corrosion •Broken wires •Tractor voltage
Twine too tight on bale or twine breaks while wrapping.	Twine routing wrong.	Check for correct routing. (See Preparing the Baler section.)
	Bad twine, knots in twine, new ball with tight core, wet twine.	Pull out bad twine or replace twine.
	Twine tension too high.	Reduce twine tension. (See Adjust Twine Tension in Operating the Baler section.)
	Wrong twine tension plate pin or springs.	Replace with correct parts.
	Crop buildup at twine guides.	Remove crop buildup.
	Deep grooves worn in twine guide.	Replace twine guide.

Symptom	Problem	Solution
	Sisal twine binding at the twine indicator wheel.	Route sisal twine 1/4 of a turn only around the twine indicator wheel.
Twine falls off twine indicator wheel.	Retaining strap behind the twine indicator wheel is not in correct position.	Adjust retaining strap. (See Adjust Twine Indicator Retaining Strap in Service—Baler section.)
	Plastic twine not wrapped a full turn around pulley.	Wrap twine a full turn around the indicator wheel.
Twine too loose on bale.	Broken or missing twine tension spring.	Replace spring.
	Crop buildup between twine tension plates.	Remove crop buildup.
	Wrong tension spring pin.	Replace pin.
	Bale density low in certain sections.	Review Interpret Bale Shape Indicators in Operating the Baler section.
	Twine tension too low.	Increase twine tension. (See Adjust Twine Tension in Operating the Baler section.)
	Worn twine tension plates.	Replace worn parts.
	Less than two wraps of twine on end of bale.	Increase number of wraps. (See Set Number Of Twine End Wraps in Operating the Baler section.)
	Faulty bale tensioning valve.	Repair or replace valve. (See your John Deere dealer or qualified service provider.)
	Belt tension or gate cylinder leaking.	Check for cylinder leaks. Repair as necessary. (See your John Deere dealer or qualified service provider.)
	Twine not wrapped a full turn around twine indicators.	Wrap twine a full turn around twine indicators.
Twine tension not uniform across width of bale.	Twine catching on a bent compressor rod.	Straighten rod.

Symptom	Problem	Solution
	Bale tension not uniform from side-to-side.	Check for correct twine routing. (See Preparing the Baler section for twine routing.)
		See Operating the Baler section for the proper baling technique.
		Check for leaks in the tension system. Repair or replace parts as necessary. (See your John Deere dealer or qualified service provider.)
		Adjust bale shape sensors. (See procedure in Service—Baler section.)
	Faulty bale tensioning valve.	Repair or replace valve. (See your John Deere dealer or qualified service provider.)
	Belt tension cylinder leaks.	Repair or replace the cylinder. (See your John Deere dealer or qualified service provider.)
	Monitor-controller bale shape bars read high before bale ends are tight.	Adjust bale shape sensors. (See Adjust Bale Shape Sensor [Channel 007 and 009] in Service—BaleTrak™ Pro and Plus System section.)
		Review Interpret Bale Shape Indicators in Operating the Baler section.
Twine loose and wide twine spacing on the left-hand side of bale.	Faulty bale tensioning valve.	Repair or replace valve. (See your John Deere dealer or qualified service provider.)
	Belt tension cylinder leaks.	Repair or replace the cylinder. (See your John Deere dealer or qualified service provider.)
		Avoid overfilling right-hand side. Review Interpret Bale Shape Indicators in Operating the Baler section.
	Monitor-controller bale shape bars read high before bale ends are tight.	Adjust bale shape sensors. (See Adjust Bale Shape Sensor [Channel 007 and 009] in Service—BaleTrak™ Pro and Plus System section.)
	Twine slips with in loose crop.	Activate cinch wrap on channel 004 of monitor.

BaleTrak is a trademark of Deere & Company

Symptom	Problem	Solution
Twine loose on right-hand side of bale.	Twine not anchored well and slips around bale.	Too much twine tension. Twine catches late. (See Adjust Twine Tension in Operating the Baler section.) Incorrect twine routing. (See Route Twine in Preparing the Baler section.)
	Excess right-hand end wraps pull down end of bale and create loose twine or wide twine spacing near right-hand end.	Continue to drive forward until twine pulleys are moving.
Lack of density in left-hand side of bale.	Left-hand bale shape bar reaches top when left-hand belt is tight. Right-hand bar reaches top with the tight right-hand belt resulting in overfilling the right-hand side.	Adjust bale shape sensors. (See Adjust Bale Shape Sensor [Channel 007 and 009] in Service—BaleTrak™ Pro and Plus System section.)
	Left-hand end wraps pull down end of bale and creates loose twine and wide twine spacing near left-hand end.	Adjust bale shape sensors. (See Adjust Bale Shape Sensor [Channel 007 and 009] in Service—BaleTrak™ Pro and Plus System section.)
Twine arm moves to right-hand side of baler and does not return, or returns part way and stops.	Twine arm caught on compressor rod.	Regular Pickup: Align compressor rod down. (See Adjust Compressor Rack in Service— Baler section.) MegaWide™ Plus Pickup: Make sure assembly pivots freely. (See Install Compressor Rack in Service— Baler section.)
	Buildup of crop or cornstalks on compressor rods prevents twine arm travel.	See Bale Cornstalks in Operating the Baler section. Raise baler. (See Adjust Wheel Spindles in Preparing the Baler section.)
	MegaWide™ Plus Pickup: Compressor rod caught above the starter roll.	Install or adjust compressor rod channel. (See Adjust Compressor Rods [MegaWide™ Plus Pickup] in Service— Baler section.)
	Broken harness wire near slip clutch due to incorrect harness routing.	Route and clamp wire harness away from slip clutch.
Twine spacing not consistent.	Twine arm speed and arm spacing are not matched.	Decrease or increase twine spacing on the monitor. (See Set Twine Spacing in Operating the Baler section.)
	Twine not routed correctly.	Route twine correctly. (See Route Twine in Preparing the Baler section.)

Symptom	Problem	Solution
	Baling dry, slick crops, such as coastal Bermuda grass, straw, prairie grasses, or flax. Twine lags behind the twine arm because of crop trying to come out of feed opening, then suddenly catching up with the twine arm, leaving a space without the twine.	Bale when crop has more moisture. Reduce engine speed to 1500 rpm or lower and shift to a higher gear. Use Dry Straw Twine Wrap program. (See procedure in Operating the Baler section.) Lower baler. (See Wheel Spindle Positions in Preparing the Baler section.)
	High twine tension on the front twine arm causing distance between twine arms to change from setting.	Adjust twine tension. (See procedure in Operating the Baler section.)
	Twine indicator wheels binding.	Free up indicator wheels.
	Twine or twine arm contacting compressor rod.	Regular Pickup: Lower compressor rack or align the rod. (See Adjust Compressor Rack in Service— Baler section.) MegaWide™ Plus Pickup: Make sure assembly pivots freely. (See Install Compressor Rack in Service— Baler section.)
	Varying tractor engine speed.	Maintain consistent engine speed while wrapping all bales. Turn slip clutch alert PTO speed sensor on to control spacing independent of speed.
	Bale density varies across width of bale or shape not cylindrical.	Review Interpret Bale Shape Indicators in Operating the Baler section.
No twine on bale or twine not caught by bale.	Twine wrapped around the twine tube.	Reduce twine tension, if necessary, on thin plastic twine. (See Adjust Twine Tension in Operating the Baler section.)

Symptom	Problem	Solution
	Twine from the end of the twine tube too short.	With tractor shut off, pull out twine until 305—381 mm (12—15 in) is exposed from end of twine arms.
		Remove crop buildup at twine arm tension plates.
		Reduce twine tension, if necessary, on thin plastic twine. (See Adjust Twine Tension in Operating the Baler section.)
		Use heavier twine.
		Replace worn twine tension plates at the twine arm.
		Replace broken or missing spring at the twine tension plate on the twine arm.
	Twine tension too high.	Reduce twine tension. (See Adjust Twine Tension in Operating the Baler section.)
		Replace worn twine guides.
	Twine snagged on guide.	Check for correct twine routing.
	Twine not fed in with crop.	Do not stop forward travel of tractor as soon as the monitor-controller Wrapping Started indicator comes on. Allow a few seconds for twine to be fed in with hay.
	Twine box is empty.	Add twine to the twine boxes. (See Preparing the Baler section.)
	Too many pickup teeth missing.	Replace pickup teeth.
Twine too close to edge of bale.	Adjustable twine guide out of adjustment.	Adjust twine guide. (See Set Twine End Wrap Distance in Operating the Baler section.)
	Barrel-shaped or cone-shaped bales.	Fill ends of bale by crowding windrow. Adjust bale shape sensors as necessary. (See Adjust Bale Shape Sensor [Channel 007 and 009] in Service—BaleTrak™ Pro and Plus System section.)
	Twine guide is too close to the edge of the bale.	Adjust twine guide. (See Set Twine End Wrap Distance in Operating the Baler section.)
	Baling dry, slick crops such as straw or flax.	Use more twine. Increase twine distance from end of bale. (See Twine Terms And Settings in Operating the Baler section.)

Symptom	Problem	Solution
	Twine arm travels too far at the right-hand side of baler, due to manually moving twine arms using monitor-controller EXTEND key.	If recycling twine arm, press monitor-controller WRAP key so setting for end twine spacing occurs.
	Twine arm travel on the right-hand side is out of adjustment.	Adjust. (See Twine Terms And Settings in Operating the Baler section.)
Twine not cut.	Bale is ejected before twine is cut.	Verify that twine has stopped moving before discharging bale.
	Twine cutter out of adjustment.	Adjust twine cutter tension. (See procedure in Service—Baler section.)
	Dull knife or uneven edge not contacting with anvil.	Rotate, sharpen, or replace the knife.
	Front twine arm stop is installed backwards.	Install stop with the trimmed edge toward the twine arm (460M). Install stop with the trimmed edge toward the front of the baler (560M).
	Crop buildup on top of anvil.	Adjust height of twine cutter to twine arm. (See Adjust Twine Cutter Tension in Service—Baler section.)
	Twine cutter anvil not level.	Adjust twine cutter so anvil is level (parallel with the bottom edge of frame).
	Knife not contacting anvil fully.	Adjust knife so the full length of the knife edge contacts the anvil. (See Check and Adjust Twine Cutter Knife in Service—Baler section.)
	Obstruction causing twine not to be guided under knife.	Remove obstruction.
	Bent twine guide rod.	Straighten or replace.
	Anvil is worn under knife.	Replace anvil.
	Binding in twine knife pivot or cutter linkage.	Repair or replace so linkage operates freely.
	Incorrect twine routing or bad ball of twine causing high twine tension.	Correct cause of high tension.

Symptom	Problem	Solution
	Twine is above the starter roll and misses the twine guide.	Stop forward travel immediately when Wrapping Started indicator is displayed and beeps.
		Reduce travel speed nearing completion of bale.
		Install compressor rack if removed. (See procedure in Service—Baler section.)
		Add additional compressor rods.
	Twine not routed correctly.	Route twine correctly. (See Route Twine in Preparing the Baler section.)
	Low voltage prevents twine arms from activating twine cutter.	See your John Deere dealer or qualified service provider.
	Twine tension too high, preventing twine arms from going to home position.	Reduce twine tension. (See Adjust Twine Tension in Operating the Baler section.)
Twine unrolling.		Slow gate raise time by adjusting SCV flow to 7—8 seconds, to reduce bale rolling distance. Maintain engine rpm during discharge.
		Let bale turn 25 seconds after cutting.
		Increase twine tension. (See Adjust Twine Tension in Operating the Baler section.)
		Reduce number of end wraps on the left-hand side.
		Use re-extension or cinch wrap programs.
	Push bar cross-tube contacts and disturbs cut twine ends	Adjust channel 033 monitor setting of time delay between cut-off of twine and display of eject valve. (See Adjust Delay Of Twine Eject in Operating the Baler section.)
Twine actuator does not come all the way home. Twine does not cut off.	Low voltage to the monitor-controller under load.	Check tractor voltage. (See Test Tractor Convenience Outlet Voltage [Channel 019] in Operating the Baler section.)
	Twine ends contact ground.	Adjust setting for delay of twine eject. (See Adjust Delay of Twine Eject in Operating the Baler section.)
Poor bale appearance when using twine and the precutter knives.	Stem length is reduced when precutting the crop.	Increase the amount of twine applied to the bale by decreasing twine spacing.

DP99999,0000DF5-19-22NOV17

BaleTrak™ Pro or Plus Monitor-Controller Difficulties

Symptom	Problem	Solution
Monitor-Controller LCD display and switches do not work.	Monitor-controller connection to tractor is unplugged.	Plug in connection.
	Monitor-controller was hooked up with reverse polarity.	Check polarity of 12 V power supply.
Twine arm actuator does not function. Stop indicator displays. Alarm does not sound.	Twine arm actuator failed.	Replace actuator. (See your John Deere dealer or qualified service provider.) Inspect wire harness and repair or replace.
	Twine arm wedged against back side of knife.	Use monitor-controller RETRACT key and retract twine arm. Clean and lubricate the knife pivot.
Twine arm actuator does not function. Stop indicator displays and alarm sounds.	Twine arm actuator failed.	Replace actuator. (See your John Deere dealer or qualified service provider.) Inspect wire harness and repair or replace.
	Twine arm wedged against back side of knife.	Use monitor-controller RETRACT key and retract twine arm. Clean and lubricate the knife pivot.
Twine actuator does not complete its travel. Stop indicator displays and alarm sounds.	Twine arm caught on compressor rod.	Align compressor rod down. (See Adjust Compressor Rack [Regular Pickup] in Service—Baler section.)
	Twine arm travel restricted by foreign object or hay buildup.	Inspect and remove blockage.
Stop indicator is displayed on monitor-controller when activated.	Twine or net actuator disconnected.	Check actuator connectors.
	Wiring is loose or cut.	Check wire harness connector for breaks.
Automatic twine cycle does not function. Stop indicator displays and alarm sounds.	Defective gate closed switch.	Replace switch.
	Incorrect gate closed switch adjustment.	Adjust gate close switch.
	Gate not closed and does not activate one gate switch.	Remove hay buildup from gate area. Operate baler at tractor rated PTO speed when closing the gate.
	Released selective control valve too soon after closing gate.	Continue to hold selective control valve 2 seconds after gate closes.

Symptom	Problem	Solution
	Gate twisted and does not close.	See your John Deere dealer or qualified service provider.
Twine arm actuator stops at full extension and will not retract.	Monitor-controller set for incorrect baler model.	Change monitor-controller setting. (See Baler Model Program in Operating the Baler section.)
		Inspect wire harness. Repair or replace.
Twine spacing to edge of bale is greater than monitor-controller setting.	Incorrect mechanical twine guide setting.	Adjust mechanical twine guide. (See Set Twine Spacing in Operating the Baler section.)
Number of end wraps is different from monitor-controller setting.	Missing or bent twine guide rod.	Replace or straighten the rod.
	Not operating at tractor rated PTO speed (without slip clutch alert turned on).	Operate at rated PTO speed or at a consistent speed. A constant speed less than rated PTO speed requires a different monitor-controller setting.
		Turn slip clutch alert PTO speed sensor on to control spacing independent of PTO speed. (See Operating the Baler section.)
Erratic twine spacing. (See Automatic Twine Spacing - Twine Spacing Not Consistent in this section.)	Twine catching on foreign object or compressor rods.	Inspect and remove blockage or adjust compressor rods. (See Adjust Compressor Rack [Regular Pickup] in Service—Baler section.)
	Incorrect monitor-controller settings.	Reset to factory initial settings. (See procedures in Operating the Baler section.)
	Not operating at tractor rated PTO speed (without slip clutch alert turned on).	Operate at rated PTO speed or at a consistent speed. A constant speed less than rated PTO speed requires a different monitor-controller setting.
		Turn slip clutch alert PTO speed sensor on to control spacing independent of PTO speed. (See Operating the Baler section.)
	Distance between twine arms incorrect for monitor-controller setting.	Set twine arm spacing for monitor-controller setting. (See Set Twine Spacing in Operating the Baler section.)
		Inspect wire harness. Repair or replace.

Symptom	Problem	Solution
Net wrap indicator and alarm activates.	Knife did not cut the net wrap material.	Adjust brake. (See Adjust Net Wrap Stretch in Service—Net Wrap section.)
		Sharpen net wrap cut-off knife. (See Sharpen Net Wrap Knife in Service—Net Wrap section.)
	Incorrect net wrap switch adjustment.	Adjust switch. (See Check and Adjust Net Wrap Switch in Service—Net Wrap section.)
	Net wrap switch actuator lever not free to rotate.	Check actuator lever for obstruction or corrosion in hinged area.
Twine or net application settings not consistent with different bale sizes.	Not operating at tractor rated PTO speed (without slip clutch alert turned on).	Operate at rated PTO speed or a consistent speed. A constant speed less than rated PTO speed requires a different monitor-controller setting.
		Turn slip clutch alert PTO speed sensor on to control spacing independent of PTO speed. (See Operating the Baler section.)
	Incorrect bale diameter display calibration.	Calibrate display. (See Calibrate Bale Diameter Display [Channel 005] in Operating the Baler section.)
Bale shape is inconsistent with monitor-controller reading.	Operator not following recommended procedure.	See Interpret Bale Shape Indicators in Operating the Baler section.
	Incorrect bale shape bar and sensor adjustments.	Adjust bale shape bar display and bale shape sensors. (See procedures in Service—Baler section.)
	Bale shape sensors failed.	Replace sensors. (See Adjust Bale Shape Sensor [Channel 007 and 009] in Service—BaleTrak™ Pro and Plus System section.)
	Broken bale shape sensor arm spring.	Replace spring.
Bale size inconsistent with monitor-controller setting.	Incorrect bale diameter display adjustment.	Calibrate and adjust bale diameter display. (See Adjust Bale Diameter Display [Channel 028] in Operating the Baler section.)
	Bale diameter sensor failed.	Replace sensor. (See Adjust Bale Shape Sensor [Channel 007 and 009] in Service—BaleTrak™ Pro and Plus System section.)
Near-full size indicator does not display on monitor-controller.	Bale diameter sensor failed.	Replace sensor. (See Adjust Bale Shape Sensor [Channel 007 and 009] in Service—BaleTrak™ Pro and Plus System section.)

Symptom	Problem	Solution
Bales are not dense.	Variable core feature is activated.	Turn off variable core.
	Variable core set for too large of diameter.	Reduce variable core diameter setting or turn off feature.
	Variable core solenoid failed.	Replace solenoid. (See your John Deere dealer or qualified service provider.)
	Bale diameter sensor failed.	Replace sensor. (See Adjust Bale Shape Sensor [Channel 007 and 009] in Service—BaleTrak™ Pro and Plus System section.)
	Incorrect bale diameter display calibration or adjustment.	Calibrate and adjust bale diameter display. (See Adjust Bale Diameter Display [Channel 028] in Operating the Baler section.)
Gate open indicator is on when gate is closed.	Incorrect gate latch switch adjustment.	Adjust switches. (See Adjust Gate Latch Proximity Switches in Service—Baler section.)
	Defective gate latch switches.	Replace switches. (See Replace Gate Latch Proximity Switches in Service—Baler section.)
Gate Closed indicator is not displayed after attempting to close gate; Stop indicator can flash and buzzer can sound.	Gate did not close because gate lock is engaged.	Unlock gate.
	Gate not fully closed due to an obstruction or twisted condition.	Remove obstruction or straighten gate.
	Belts pinched between lower gate roll and axle tube.	Raise gate fully and close gate at full tractor rpm. If the tractor has low hydraulic flow, install orifice. Operate PTO while closing.
Gate Closed indicator goes out, Stop indicator and buzzer come on while baling.	Gate latch not adjusted properly.	Adjust gate latch stop. (See procedure in Service—Baler section.)
	Gate latch switches not adjusted properly.	Adjust gate latch proximity switches. (See procedure in Service—Baler section.)
	Tractor selector control valve (SCV) leaking oil to the gate hydraulic cylinder.	Repair the tractor selector control valve (SCV). (See your John Deere dealer or qualified service provider.)
	Gate latch hooks yielded.	Replace hooks and adjust gate latch. (See Adjust Gate Latch Stop in Service—Baler section.)

Symptom	Problem	Solution
	Air in hydraulic system.	Open and close gate several times to remove air.
	Internal leak in gate hydraulic cylinder.	Repair or replace the cylinder. (See your John Deere dealer or qualified service provider.)
	Hydraulic cylinder not retracted when gate is closed.	Hold tractor SCV lever 2—3 seconds after Gate Closed indicator is displayed.
Stop indicator and buzzer come on when gate is closed.	Gate is not latched on one side.	Hold tractor SCV lever 2—3 seconds after Gate Closed indicator is displayed to make sure that both sides are latched. Repair or adjust latch stop. (See Adjust Gate Latch Stop in Service—Baler section.)
	Gate latch switches not adjusted properly.	Adjust gate latch proximity switches. (See procedure in Service—Baler section.)
	Defective gate latch switches.	Check gate latch proximity switches. (See Adjust Gate Latch Proximity Switches and Adjust Oversize Bale Switch in Service—Baler section.) Replace if necessary. (See your John Deere dealer or qualified service provider.)
	Poor connections or broken wires to gate latch switches.	Test wires for continuity. Repair as necessary.
	Oversize bale switch out of adjustment.	Adjust oversize the bale switch. (See procedure in Service—Baler section.)
	Defective oversize bale switch.	Check oversize bale switch. (See Adjust Gate Latch Proximity Switches and Adjust Oversize Bale Switch in Service—Baler section.) Replace if necessary. (See your John Deere dealer or qualified service provider.)
	Broken or shorted wires or bad connections to oversize bale switch.	Check connections and test wires for continuity. Repair as necessary.
Gate Closed indicator is displayed, but gate is open or not latched.	Gate latch switches not adjusted properly.	Adjust gate latch proximity switches. (See procedure in Service—Baler section.)

Symptom	Problem	Solution
	Defective gate latch switches.	Check gate latch proximity switches. (See Adjust Gate Latch Proximity Switches and Adjust Oversize Bale Switch in Service—Baler section.) Replace if necessary. (See your John Deere dealer.)
	Crop buildup in latch area restricting hook engagement.	Remove buildup.
	Broken or shorted wires or bad connections to gate latch switches.	Check connections and test wires for continuity. Repair as necessary.
One or both bar graphs on LCD display do not correspond to shape of bale being formed.	Operator not interpreting signal properly.	Review Interpret Bale Shape Indicators in Operating the Baler section.
	Bale shape sensors not adjusted properly.	Adjust bale shape sensors. (See Adjust Bale Shape Sensor [Channel 007 and 009] in Service—BaleTrak™ Pro and Plus System section.)
	Defective bale shape sensors.	Replace bale shape sensors. (See Adjust Bale Shape Sensor [Channel 007 and 009] in Service—BaleTrak™ Pro and Plus System section.)
	Broken wires between monitor-controller and bale shape sensors or poor connection at harness connectors.	Check continuity. Repair wires or connections as necessary.
	Faulty display.	Test display. (See Test Liquid Crystal Display (LCD) Panel [Channel 020] in Service—BaleTrak™ Pro and Plus System section.)
Low voltage light comes on.	Low voltage to monitor-controller under load.	Check voltage. (See Test Tractor Convenience Outlet Voltage [Channel 019] in Service—BaleTrak™ Pro and Plus System section.)
Bale counter does not count bales.	For the monitor-controller to count a bale, an automatic wrap cycle must be followed by a gate opening cycle.	Check that both gate latch proximity switches are functioning properly. (See Adjust Gate Latch Proximity Switches and Adjust Oversize Bale Switch in Service—Baler section.)
Monitor-controller functions do not display.	Monitor-controller was hooked up with reverse polarity.	Check polarity of 12 V power supply.
	Intermittent voltage loss due to loose connectors.	Disconnect and inspect connectors for bent or pushed back terminals.

BaleTrak is a trademark of Deere & Company

Symptom	Problem	Solution
	Intermittent connection in wire harness due to broken or frayed wire.	Inspect wire harness and repair or replace.
Stop indicator is displayed on monitor-controller (E201) when activated.	Twine or net actuator disconnected.	Check actuator connectors.
	Wiring is loose or cut.	Check wire harness connector for breaks.
Twine System: Extend Or Retract And Wrap switches do not move the twine actuator. Stop flashes.	Wiring has a break in it.	Check wire harness for breaks and check connectors for pushed back pins.
Twine arm actuator does not come all the way home. Twine does not cut off.	Low voltage to the monitor-controller under load.	See your John Deere dealer or qualified service provider.
Twine arm actuator does not function. Stop indicator displays.	Twine arm actuator failed.	Replace actuator. (See your John Deere dealer or qualified service provider.) Inspect wire harness and repair or replace.
	Twine arm wedged against the front side of knife.	Use monitor-controller RETRACT key to retract twine arm. Clean and lubricate the knife pivot.
Twine actuator does not complete its travel. Stop indicator displays and alarm sounds.	Twine arm travel restricted by foreign object, compressor rod, or hay buildup.	Inspect and remove blockage.
Automatic twine cycle does not function. Stop indicator displays and alarm sounds.	Defective gate latch switches.	Replace proximity switches. See your John Deere dealer or qualified service provider.
	Incorrect gate latch switch adjustment.	Adjust gate latch proximity switches. (See procedure in Service—Baler section.)
	Gate not closed and does not activate one gate switch.	Remove hay buildup from gate area. Operate baler at tractor rated PTO speed when closing the gate.
	Released selective control valve too soon after closing gate.	Continue to hold selective control valve 2 seconds after gate closes.
	Gate twisted and does not close.	See your John Deere dealer or qualified service provider.
Twine arm actuator stops at full extension and will not retract.	Monitor-controller set for incorrect baler model.	Change monitor-controller setting. (See Baler Model Program in Operating the Baler section.)

Symptom	Problem	Solution
		Inspect wire harness. Repair or replace.
Twine spacing to edge of bale is greater than monitor-controller setting.	Incorrect mechanical twine guide setting.	Adjust mechanical twine guide. (See Set Twine Spacing and Set Twine End Wrap Distance in Operating the Baler section.)
Number of end wraps is different from monitor-controller setting.	Incorrect bale diameter display adjustment.	Calibrate and adjust bale diameter display. (See Adjust Bale Diameter Display [Channel 028] in Operating the Baler section.)
	Not operating at tractor rated PTO speed (without slip clutch alert turned on).	Operate at rated PTO speed or at a consistent speed. A constant speed less than rated PTO speed requires a different monitor-controller setting.
		Turn slip clutch alert PTO speed sensor on to control spacing independent of PTO speed. (See Operating the Baler section.)
Erratic twine spacing.	Incorrect monitor-controller settings.	Reset to factory initial settings and check baler model number. (See Reset BaleTrak™ Pro or Plus Monitor-Controller to Initial Settings [Channel 001] in Operating the Baler section.)
	Not operating at tractor rated PTO speed (without slip clutch alert turned on).	Operate at rated PTO speed or at a consistent speed. A constant speed less than rated PTO speed requires a different monitor-controller setting.
		Turn slip clutch alert PTO speed sensor on to control spacing independent of PTO speed. (See Operating the Baler section.)
	Distance between twine arms incorrect for monitor-controller setting.	Set twine arm spacing for monitor-controller setting. (See Set Twine Spacing in Operating the Baler section.)
		Inspect wire harness. Repair or replace.
Twine application settings not consistent with different bale sizes.	Not operating at tractor rated PTO speed (without slip clutch alert turned on).	Operate at rated PTO speed or a consistent speed. A constant speed less than rated PTO speed requires a different monitor-controller setting.
		Turn slip clutch alert PTO speed sensor on to control spacing independent of PTO speed. (See Operating the Baler section.)

Symptom	Problem	Solution
	Incorrect bale diameter display adjustment.	Calibrate and adjust bale diameter display. (See Adjust Bale Diameter Display [Channel 028] in Operating the Baler section.)
Net Wrap System: **Net actuator will not function during the auto cycle. Stop flashes (E211).**	Wiring has a break in it.	Check wire harness for breaks and check connectors for pushed back pins.
Net actuator does not move when Extend Or Retract switches are pressed in net mode.	The Extend Or Retract switches are not intended to control net actuator in net mode.	See Test Twine Or Net Wrap Actuator Current (Channel 018) in Operating the Baler section.
Net actuator does not come all the way home. Net does not cut off.	Low voltage to the monitor-controller under load.	See Test Tractor Convenience Outlet Voltage (Channel 019) in Operating the Baler section
Net wrap indicator and alarm activates.	Knife did not cut the net wrap material (E401).	Adjust knife and brake. (See Check and Adjust Net Wrap Feed Roll Brake in Service—Net Wrap section.) Sharpen knife. (See Sharpen Net Wrap Knife in Service—Net Wrap section.) Adjust knife to the rubber flap.
	Incorrect net wrap switch adjustment (E401).	Check and adjust the net wrap switch. (See Check and Adjust Net Wrap Switch in Service—Net Wrap section.)
	Net wrap switch actuator lever not free to rotate.	Check actuator lever for obstruction or corrosion in hinged area.
Net wrapping settings not consistent with different bale sizes.	Not operating at tractor rated PTO speed (without slip clutch alert turned on).	No slip clutch alarm. Operate at rated PTO speed or a consistent speed. A constant speed less than rated PTO speed requires a different monitor-controller setting. Turn slip clutch alert PTO speed sensor on to control spacing independent of PTO speed. (See Operating the Baler section.)
	Incorrect bale diameter display adjustment.	Calibrate and adjust display. (See Adjust Bale Diameter Display [Channel 028] in Operating the Baler section.)

DP99999,0000E2B-19-27NOV17

Slip Clutch Alert

Symptom	Problem	Solution
False slip indication	Slip alarm sounds without PTO or pickup clutch slipping	Check pickup sensor by viewing rpm on the control monitor.
		Check PTO speed on the control monitor.
		Slip alert feature can be turned off.
	Pickup rpm is higher than PTO sensor rpm	Reverse orange and brown terminals inside connector.
One of the clutches slip but the slip alarm does not sound	Monitor not receiving PTO sensor input	Check PTO speed on the control monitor.
	Both sensors have not been activated	Check that both sensors are activated and PTO set at proper speed (See Slip Clutch Alert PTO Speed Sensor in Operating the Baler section.)
Twine or net application does not correct for slower speed	Improper sensor adjustment, faulty sensor, broken wires	Check PTO sensor adjustment.
		Check PTO speed on the control monitor.
Pickup speed sensor is damaged	Clutch sprocket contacts the sensor	Adjust the gap between the sensor and the sprocket.
PTO speed sensor is damaged	Main clutch contacts sensor	Tighten bolts attaching the PTO driveline to the gear case
		Repair loose gear case shaft (See your John Deere dealer or qualified service provider.)
		Adjust the gap between the PTO sensor and the clutch. (See Adjust PTO and Drive Roll Slip Clutch Alert Sensors in Service-Baler section.)

DP99999,0000DF6-19-27OCT17

Feed Difficulties

Symptom	Problem	Solution
Baler will not feed hay, plugged at feed opening.	Missing pickup teeth.	Replace teeth.
	Regular Pickup: Pickup drive idler not adjusted properly or pickup belt damaged.	Adjust idler or replace belt, if necessary. (See Adjust Pickup Drive Belt Idler in Service—Baler section.)

Symptom	Problem	Solution
	Pickup slip clutch does not engage.	Re-engage slip clutch by stopping PTO or reducing tractor rpm to idle speed.
	MegaWide™ Plus or MegaWide™ HC2 Pickup: Slip clutch worn.	Replace pickup slip clutch. (See your John Deere dealer or qualified service provider.)
	Compressor rack is too low.	Raise rack. (See Adjust Compressor Rack in Service—Baler section.)
	Gate opening while baling.	Adjust gate latch stop. (See procedure in Service—Baler section.)
		Check for leaking tension or gate hydraulic cylinders or tractor valve. Repair or replace components as necessary. (See your John Deere dealer or qualified service provider.)
	Plugging at crop dividers.	See Plugging At Crop Dividers in Pickup Difficulties in this section.
	Gate not closed or latched.	Eject bale. Close gate.
	Baler too low. Wheel spindles not installed in normal position.	Install spindles in normal position. (See Bale Wet Hay in Operating the Baler section.)
	Oversize bale.	Check oversize bale switch. (See Test Oversize Bale Switch in Operating the Baler section.)
		Check bale diameter display. (See Calibrate Bale Diameter Display [Channel 005] in Operating the Baler section.)
		Alarm cannot be heard by operator. Adjust alarm volume. (See Adjust Audible Alarm Volume in Operating the Baler section.)
	PTO driveline slip clutch is slipping.	Adjust clutch. (See Adjust Main PTO Driveline Slip Clutch [MegaWide™ Plus and Regular Pickup] in Service—Baler section.)
		Check clutch for warped pressure plate which can result in much lower capacity.
	Wrappage of foreign material on starter roll.	Remove material.

MegaWide is a trademark of Deere & Company

Symptom	Problem	Solution
	Large windrows and too fast ground speed.	Reduce windrow size and reduce speed.
	Incorrect belt routing.	Properly route belts. (See Install Belts in Service—Baler section.)
Baler will not feed short, dry, slick, or brittle crops. (See Bale Short, Dry, Slick Crops in Operating the Baler section.)	Pickup too low.	Raise pickup. (See Adjust Pickup Height in Operating the Baler section.)
	Dry material flaking off bale collects and blocks feed opening.	Disengage PTO when turning between windrows and when not feeding material.
	PTO speed too fast.	Reduce engine speed to 1500 rpm or lower and shift to higher gear. MegaWide™ Plus or MegaWide™ HC2 Pickup: Install optional slowdown sprockets.
	Regular Pickup: Excessive buildup on top of the compressor rack.	Remove all compressor rods except one center rod and one rod on each end of cross-tube.
	Regular Pickup: Pickup drive idler not adjusted properly or pickup belt damaged.	Adjust idler or replace belt, if necessary. (See Adjust Pickup Drive Belt Idler in Service—Baler section.)
	MegaWide™ Plus or MegaWide™ HC2 Pickup: Slip clutch worn.	Replace slip clutch. (See your John Deere dealer or qualified service provider.)
	Bale density too high.	Decrease density. (See Adjust Bale Density in Operating the Baler section.) Use variable core feature to help start the bale.
	Windrows too small.	Make larger windrows by raking.
	Weathered windrows (rained on several times).	Make larger windrows by raking.
	Brittle crop breaks into smaller pieces easily.	Bale with dew on crop especially rotary combined straw. Use variable core feature to reduce density and breakage of crop.

Symptom	Problem	Solution
	Bale fails to start rotating due to one or both sides of windrow extending outside of the bale edge especially in dry bahia grass or coastal Bermuda grass.	Make windrow narrower than bale width even with a wide pickup. Center baler over windrow while starting.
Baler will not feed cornstalks. (See Bale Cornstalks in Operating the Baler section.)	Pickup is too high.	Lower pickup. (See Adjust Pickup Height in Operating the Baler section.) Raise baler. (See Adjust Wheel Spindles in Preparing the Baler section.)
	Windrows too large.	Make windrows smaller. Slow ground speed. Maintain PTO speed.
	Missing pickup teeth.	Replace teeth.
	Regular Pickup: Pickup drive idler not adjusted properly or pickup belt damaged.	Adjust idler or replace belt, if necessary. (See Adjust Pickup Drive Belt Idler in Service—Baler section.)
	MegaWide™ Plus or MegaWide™ HC2 Pickup: Slip clutch worn.	Replace slip clutch. (See your John Deere dealer or qualified service provider.)
	Compressor rack is too low.	Raise rack. (See Adjust Compressor Rack in Operating the Baler section.)
Baler will not feed long, stiff, cane-type crops (See Bale Long, Stiff, Cane-Type Crops in Operating the Baler section.)	Material plugs at pickup and feed opening.	See Bale Long, Stiff, Cane-Type Crops in Operating the Baler section.
	Bale fails to start rotating due to crop wedging into top of starting chamber.	See Bale Long, Stiff, Cane-Type Crops in Operating the Baler section.
	Compressor rack is too low.	Raise rack. (See Adjust Compressor Rack [Regular Pickup] in Operating the Baler section.)
Baler will not feed wet hay.	Surface moisture on the bottom of the windrow.	See Bale Wet Hay in Operating the Baler section.
Starter roll chain breaks.	PTO driveline slip-clutch spring disk too tight or clutch plates seized.	Adjust or slip the main drive clutch. (See procedures in Service—Baler section.) See Start A Bale In Difficult Conditions in Operating the Baler section.

DP99999,0000DF7-19-22NOV17

Feed Difficulties with Roller Baffle

Symptom	Problem	Solution
Crop pushing ahead of roller.	Not enough float.	Increase float (See Adjust Roller Baffle Float Tension in Service—Baler section.)
	Tall stubble.	Raise pickup
	Low drawbar.	Add drawbar shield
		Adjust roller baffle height
		Raise pickup
	Incorrect baler hitch height.	See Adjust Baler Hitch in Preparing the Baler section.
Crop wrapping on the roller.	Band ties missing or loose.	Replace missing ties on roller. Tighten loose ties.
Roller not balanced.	Crop not feeding under roller.	Balance roller (See Balance Roller Baffle in Service—Baler section.)
Roller bouncing.	Float too light.	Reduce roller float spring pressure (See Adjust Roller Baffle Float Tension in Service—Baler section.)
Pickup plugging.	Crop pushing through compressor rack.	Add compressor rods to each hole, except the outside hole on each end.
	In cornstalks, pickup stalls.	Disengage torsion spring for baffle or order Cornstalk Feeding Enhancement Kit. (See your John Deere dealer or qualified service provider.)

DP99999,0000DB2-19-27NOV17

Pickup Difficulties

Symptom	Problem	Solution
Pickup teeth do not revolve.	Feed opening plugged with crop.	Reduce ground speed and windrow size.
	Regular Pickup: Pickup drive idler not adjusted properly or pickup belt damaged.	Adjust idler or replace belt, if necessary. (See Adjust Pickup Drive Belt Idler in Service—Baler section.)
	MegaWide™ Plus Pickup: Slip clutch worn.	Replace slip clutch. (See your John Deere dealer or qualified service provider.)

MegaWide is a trademark of Deere & Company

Symptom	Problem	Solution
	Pickup drive chain broken or missing.	Repair or replace. (See your John Deere dealer or qualified service provider.)
	Broken cam or other internal pickup parts.	Check for failed or worn cam or internal parts. Repair or replace as necessary. (See your John Deere dealer or qualified service provider.)
Pickup will not float or drop freely.	Excess or insufficient float assist.	Adjust pickup float springs. (See procedure in Service—Baler section.)
	Binding between flare and end strippers.	Remove chaff and dirt. Straighten any bent parts. Regular Pickup: Install gauge wheels to improve ground gauging.
	If equipped with gauge wheels: Crop or mud buildup between flare pivot plate and pickup gauge wheel arm.	Replace flare pivot plate. (See your John Deere dealer or qualified service provider.)
Not picking up hay cleanly.	Pickup teeth set too high.	Lower pickup. (See Adjust Pickup Height in Operating the Baler section.)
	Too much float spring tension, causing pickup to bounce or stay up.	Reduce float spring tension. (See Adjust Pickup Float Springs in Service—Baler section.)
	Damaged crop dividers or stripper, causing pickup to stay up.	Straighten or replace damaged parts. (See your John Deere dealer or qualified service provider.)
	Ground speed too fast.	Reduce ground speed.
	Windrows too light.	Rake heavier windrows.
	Pickup teeth bent or broken.	Straighten or replace teeth. (See your John Deere dealer or qualified service provider.)
	Baler too high.	Lower baler. (See Adjust Wheel Spindles in Preparing the Baler section.)
	Wrong baler hitch position	See Adjust Baler Hitch in Preparing the Baler section.

Symptom	Problem	Solution
	Light crop rolls forward instead of picking up.	Rake heavy windrows if possible. To maintain the desired ground speed, operate the baler at 1/2 to 2/3 normal rpm, and shift tractor to higher gear. MegaTooth™: Install speed reduction sprocket at slip clutch. Reduce engine speed to 1500 rpm or lower and shift to a higher gear.
	Overcrowding ends.	Reduce crowding. Install converging wheels if not equipped (Regular pickup only).
	Tractor tires smashing crop into stubble.	Widen wheel spacing. (See Adjust Tractor Wheels in Preparing the Tractor section.)
Pickup teeth digging in ground.	Pickup set too low.	Raise pickup. (See Adjust Pickup Height in Operating the Baler section.)
	Gauge wheels (if equipped) are set too high relative to teeth.	Adjust pickup gauge wheels. (See procedure in Operating the Baler section.)
	Poor pickup flotation.	Increase float spring tension. Check pivots. (See Adjust Pickup Float Springs in Service—Baler section.)
	Soft ground. Pickup will not raise high enough.	Raise baler. (See Adjust Wheel Spindles in Preparing the Baler section.) Turn tractor drawbar over. (See Adjust Drawbar in Preparing the Tractor section.) 460M and 560M: Install Hi-flotation tires.
	Baler hitch incorrect	See Adjust Baler Hitch in Preparing the Baler section.
	Rough terrain.	460M Regular or MegaWide™ Pickup: Install gauge wheels.
Pickup teeth contact starter roll.	Pickup raised too high.	Regular Pickup: Adjust upstop bracket inward so the tab does not align with the slot in the end stripper. Repeat for the other side.
Pickup teeth bent or broken.	Pickup set too low.	Raise the pickup. (See Adjust Pickup Height in Operating the Baler section.) Adjust gauge wheels (if equipped). (See Adjust Pickup Gauge Wheels in Operating the Baler section.)

Symptom	Problem	Solution
	Foreign material inside pickup strippers or broken teeth.	Remove material or replace teeth.
	Baling cornstalks.	Raise the pickup. Higher tooth breakage can be expected. (See Bale Cornstalks in Operating the Baler section.)
	Operating twine arms with pickup in transport position.	Lower the pickup. (See Adjust Pickup Height in Operating the Baler section.)
Pickup too high with baler in lowered position.	Wheel spindles installed upside down.	Install spindles in correct position. (See Wheel Spindle Positions in Preparing the Baler section.)
	Baler height too high for crop condition.	Adjust baler to lower position on spindles. (See Wheel Spindle Positions in Preparing the Baler section.)
Plugging at crop dividers.	Overcrowding ends.	Reduce crowding. Install gathering wheels. (See Attachments section.)
	Pickup set too low.	Raise pickup. (See Adjust Pickup Height in Operating the Baler section.)
	Tractor tires smashing crop into stubble.	Widen wheel spacing. (See Adjust Tractor Wheels in Preparing the Tractor section.)
	Pivoting crop divider overlaps (shingles) stationary end stripper on the wrong side.	To give proper overlap (shingle), straighten the pivoting crop divider . Front crop dividers must be inside the end stripper panel.
Inside of strippers worn.	Strippers bent up hitting tooth coils.	Raise pickup. (See Adjust Pickup Height in Operating the Baler section.) Check for binding at crop dividers. Increase float. (See Adjust Pickup Float Springs in Service—Baler section.) 460M Regular or MegaWide™ Pickup: Install gauge wheels. (See Attachments section.) Bend strippers down for clearance and check tooth coils on pickup teeth for damage.

Symptom	Problem	Solution
Pickup cam bearings fail too quickly.	Operating 540 rpm baler with 1000 rpm PTO input speed. (540 rpm gear case has larger quill pointing to left-hand side of baler.)	With tachometer, verify that gear case output shaft speed is approximately 729 rpm when tractor is operating baler at PTO rpm. (See your John Deere dealer or qualified service provider.)

DP99999,0000D1B-19-22NOV17

Precutter Difficulties (If Equipped)

Symptom	Problem	Solution
Rotor plugged at the front side.	Ground speed is too high.	Reduce ground speed.
	PTO speed is low.	Increase PTO speed.
	Baler tongue is too high or too low.	Level machine. (See Adjust Baler Hitch in Preparing the Baler section.)
	Irregular crop flow.	Check roller baffle springs.
		Adjust windrower or rake.
Excessive crop loss.	Crop being cut is too fine.	Reduce number of knives. (See Remove and Install Precutter Knives in Preparing the Baler section.)
Rotor plugged at the rear.	Cutting length is too short.	Reduce number of knives. (See Remove and Install Precutter Knives in Preparing the Baler section.)
Crop wrapping around the rotor.	Rotor strippers or auger strippers have excessive clearance.	Adjust strippers to correct clearance.
Excessive power required to operate the machine.	Dull knives.	Sharpen knives. (See Sharpen Knives in Service—Baler section.)
	PTO speed is low.	Increase PTO speed.
	Excessive ground speed.	Reduce ground speed.
	Rotor strippers or auger stripers clogged or dirty.	Reduce number of knives. (See Remove and Install Precutter Knives in Preparing the Baler section.)
Knives cannot be engaged.	Dirt between or around knife mechanism, blocking knife movement.	Clean knife slots, knife sides, and knife mechanism to remove blockage.
		Cycle the drop floor with the knives engaged (lower and raise the floor).
	Oil cannot flow to the knife cylinders.	Check shutoff valves in the hydraulic system.

Symptom	Problem	Solution
Knives cannot be disengaged.	Oil cannot flow to the knife cylinders.	Check shutoff valves in the hydraulic system.
Bales not holding together.	Crop being cut too fine.	Reduce the number of knives. (See Remove and Install Precutter Knives in Preparing the Baler section.)
		Increase the number of the net wrap layers on the bale or increase the amount of net applied to the bale.

GW44282,000073F-19-22NOV17

Bale Quality Difficulties

Symptom	Problem	Solution
Cone-shaped bale. Monitor-controller bale shape bars read high and even.	Bale shape sensors out of adjustment.	Adjust. (See Adjust Bale Shape Sensor—In Shop Procedure [Channels 007 and 009] in Service—BaleTrak™ Pro and Plus System section.)
	Broken spring on the sender arm.	Replace the spring.
	Outside belts are not the same length.	Belts must be the same length within 38 mm (1.5 in). (See Repair Belts in Service—Baler section.)
Barrel-shaped bale. Bale shape bars read high and even.	Bale shape sensors out of adjustment.	Adjust. (See Adjust Bale Shape Sensor—In Shop Procedure [Channels 007 and 009] in Service—BaleTrak™ Pro and Plus System section.)
	Outside belts too short.	Check and correct belt length. (See Repair Belts in Service—Baler section.)
Baler will not make dense bales.	Density control adjusted for light bales.	Adjust for heavier bale. (See Adjust Bale Density and Check Baler Performance In The Field in Operating the Baler section.)
	Internal leak in belt tension hydraulic cylinders.	Repair or replace as necessary. (See your John Deere dealer or qualified service provider.)
	Internal leak in tension valve due to faulty O-ring on the adjustable relief valve or 4-to-1 check valve.	Repair or replace as necessary. (See your John Deere dealer or qualified service provider.)
	Dirty or defective relief valve.	Clean or replace. (See your John Deere dealer or qualified service provider.)

BaleTrak is a trademark of Deere & Company

Symptom	Problem	Solution
	Bale ends not filled tightly.	Crowd more hay in ends of the baler. (See Interpret Bale Shape Indicators in Operating the Baler section.)
	Light crop conditions.	Make larger windrows by raking.
	Dirty hydraulic oil in tractor.	Change the hydraulic oil and filter in tractor.
	Bale forming belts too short or too long.	Check the length and correct. (See Repair Belts in Service—Baler section.)
Baler will not make a full-size bale.	Bale diameter sensor is out of adjustment.	Adjust the bale diameter sensor. (See Adjust Bale Shape Sensor—In Shop Procedure [Channels 007 and 009] in Service—BaleTrak™ Pro and Plus System section.)
Ends of bale have rough appearance (dry hay crops).	Not filling bale ends properly.	Drive to fill the bale ends. (See Interpret Bale Shape Indicators and Check Baler Performance In The Field in Operating the Baler section.) Remove gate fillers (if equipped).
	Gate deflectors can cause ends of the bale to have rough appearance.	Polish rough cast surface of the gate deflectors.

DP99999,0000E2D-19-27NOV17

General Baler Difficulties

Symptom	Problem	Solution
Monitor-controller GATE CLOSED indicator does not come on and GATE OPEN indicator stays on.	Obstruction between the gate and frame.	Remove obstruction.
	Hay buildup on the belts in the gate area in some crop conditions.	Remove buildup. Operate PTO while closing gate.
	Too much clearance between the latch hooks and shim pad.	Adjust the gate latch stop. (See procedure in Service—Baler section.)
	Hay buildup at the gate latch area due to incorrect routing of the hydraulic pickup lift hoses.	Route hoses correctly.
Monitor-controller GATE CLOSED and STOP indicators are on.	Gate latch switch not adjusted properly.	Adjust the gate latch switch. (See procedure in Service—Baler section.)
	Tractor hydraulic valve leaking oil into baler.	Repair the tractor hydraulic valve. (See your John Deere dealer.)
	Air in the hydraulic system.	Open and close the gate several times to remove air.

Symptom	Problem	Solution
	Internal leak in the gate hydraulic cylinder.	Repair or replace the cylinder. (See your John Deere dealer or qualified service provider.)
	Hydraulic cylinder not retracted when the gate is closed.	Hold the tractor selector control valve lever 2—3 seconds after green light is on.
	Gate is not latched.	When closing gate, hold the tractor selector valve until the green light comes on.
	Gate latches not adjusted properly.	Adjust the gate latch stop. (See procedure in Service—Baler section.)
	Gate sprung.	Straighten. (See your John Deere dealer or qualified service provider.)
Gate not latched.	Obstruction between the gate and the frame.	Remove obstruction.
	Hay buildup on the belts in the gate area in some crop conditions.	Remove buildup. Operate PTO while closing gate.
	Too much clearance between the latch hooks and shim pad.	Adjust the gate latch stop. (See procedure in Service—Baler section.)
	Hay buildup at the gate latch area due to incorrect routing of the hydraulic pickup lift hoses.	Route hoses correctly.
Bale density gauge reading in red.	Tractor selector valve not in neutral position while baling.	Move the hydraulic lever to neutral while baling.
	Defective density gauge.	Replace the gauge. (See your John Deere dealer or qualified service provider.)
	Defective bale density valve cartridge.	Replace or repair the valve. (See your John Deere dealer or qualified service provider.)
Diamond surfaces on bale forming belts are rubbing together.	Upper belt tension roll in the shipping position.	Move to the operating position. (See ADJUST BELT TRACKING in Service —Baler section.)
	Crop or mud buildup on the rolls.	Clean the rolls.
	Belt tension arm not fully down.	Lower the tension arm with tractor hydraulic lever.
	Belts not routed properly.	See belt routing diagram and reroute. (See INSTALL BELTS in Service—Baler section.)

Symptom	Problem	Solution
	Belts too short.	Repair belts. (See REPAIR BELTS in Service—Baler section.)
Starter roll wraps with hay.	Regular Pickup: Pickup drive idler not adjusted properly or pickup belt damaged.	Adjust the idler or replace the belt, if necessary. (See ADJUST PICKUP DRIVE BELT IDLER in Service—Baler section.)
	MegaWide™ Plus Pickup: Slip clutch worn.	Replace the pickup slip clutch. (See your John Deere dealer or qualified service provider.)
		Check the pickup clutch torque. (See CHECK PICKUP SLIP CLUTCH TORQUE [MegaWide™ Plus] in Service—Baler section.)
	MegaWide™ Plus Pickup: Main drive slip clutch slipping.	Adjust the main PTO driveline slip clutch. (See ADJUST MAIN PTO DRIVELINE SLIP CLUTCH in Service—Baler section.)
		Adjust the starter roll scraper. (See procedure in Service—Baler section.)
	Windrow wet on the bottom.	Turn the windrow. (See BALE WET HAY in Operating the Baler section.)
	Ground speed and rpm too high when starting the bale.	Reduce the rpm until the bale core has formed.
	Windrow too large.	Decrease the windrow size.
		Install the starter roll scraper. (See your John Deere dealer.)
	Material pinched under pickup crop divider, tire, or gauge wheels (if equipped).	Start the bale with the windrow centered on the pickup. Gathering wheels can help for scattered windrows.
	Nicks or rough places on the starter roll.	Smooth with a file.
Bale density control knob hard to turn.	Raised gate or belt tension arm causes additional turning resistance.	Adjust with gate closed and belt tension arm down. (See ADJUST BALE DENSITY in Operating the Baler section.)
	Dry thread on adjusting screw.	Apply a few drops of oil or a dry graphite lubricant to the threads.
	Locking ring locked against valve body.	Unscrew the locking ring before adjusting the density control knob.

MegaWide is a trademark of Deere & Company

Symptom	Problem	Solution
Belt lacing failure.	Belts are not the same length.	Repair the belts. (See REPAIR BELTS in Service—Baler section.)
	Belts not tracking correctly.	Adjust the belt tracking. (See procedure in Service—Baler section.)
	Making oversized bales.	Check the maximum bale size adjustment. (See ADJUST OVERSIZE BALE SWITCH in Service—Baler section.)
	Belts not routed correctly.	Route the belts correctly. (See INSTALL BELTS in Service—Baler section.)
	Material wrapping on rolls.	Remove the material from the rolls.
Belt splice pins break.	Excessive wear on pins.	Check the pins for wear or breakage every 2000 bales (every 1000 bales in sandy conditions). Replace the pins if broken, or if more than one-third of pin thickness is worn through.
	Incorrect belt length can cause excessive load on the shorter belts.	See REPAIR BELTS in Service—Baler section.
Belt slipping or not turning.	Belt tension arm not returning all the way down to the tension belts.	Operate the tractor at full rpm when closing the gate to ensure that the tension arm tightens belts before gate close indicator comes on.
	Water dripping off belts and rollers.	Avoid baling in rain or frosted crop. Reduce density. (See ADJUST BALE DENSITY in Operating the Baler section.)
	Belts too long.	Check belts for proper length. (See REPAIR BELTS in Service—Baler section.)
	Excessive wrappage of net material around the top idler roll (No. 11) pinches the belt against the top baler frame tube.	Remove net and crop around the top idler roll (No. 11).
	Upper tension arm compression spring out of adjustment.	Adjust the spring. (See ADJUST TAKE-UP ARM COMPRESSION SPRINGS in Service—Baler section.)
Gate lock valve closes or locks before the gate is closed.	Gate lock valve spool is not in full unlocked position (snap ring must be against housing).	Make sure that the valve spool is not binding. If the handle contacts the bracket before the spool is fully out, bend bracket slightly to allow full travel of the valve spool in both directions.

Symptom	Problem	Solution
	Binding at the gate pivots.	Eliminate the binding.
Gate twisted.	Gate becomes unlatched on one side when baling begins, or gate becomes unlatched while baling.	Hold lever 2—3 seconds after GATE CLOSED indicator is on before beginning to bale. (Do not rely upon sound of gate closing.) To straighten the gate, see your John Deere dealer or qualified service provider.
	Gate latches not adjusted properly.	Adjust the gate latches. (See ADJUST GATE LATCH STOP in Service—Baler section.)
	Gate latch proximity switches not adjusted properly.	Check the gate latch switch adjustment. (See ADJUST GATE LATCH PROXIMITY SWITCHES in Service—Baler section.)
	Tractor selector valve leaking.	Repair or replace as necessary. (See your John Deere dealer or qualified service provider.)
	Broken or stretched latch hook.	Replace parts.
Bale sticks in the chamber.	Paint on the side sheets of the new baler.	Reduce density until the baler has made several bales to polish the side sheet. (See ADJUST BALE DENSITY in Operating the Baler section.)
	Bale density too high.	Lower the bale density at the control valve. (See ADJUST BALE DENSITY in Operating the Baler section.)
	Bale sticks in the front frame due to damp crop.	Install the High-Moisture Kit. (See Attachments section.)
	Excessive side sheet friction caused by buildup on the side sheets.	Remove buildup. Make sure the gate deflectors (if equipped) are installed in the gate.
	Excessive side sheet friction.	Check the straightness and straighten the front side sheets of the baler if needed. (See your John Deere dealer or qualified service provider.)
Damage to the belt diamond pattern. Belts cut or broken.	Material buildup on the compressor rack causing the belts to contact the starter roll.	See BALE SHORT, DRY, SLICK CROPS, and BALE CORNSTALKS in Operating the Baler section.
	Foreign objects in the windrow.	Operate with the pickup as high as possible. (See ADJUST PICKUP HEIGHT in Operating the Baler section.) Remove foreign objects from the windrow.

Symptom	Problem	Solution
	Wrappage on the lower drive roll forcing the belt into the starter roll.	Remove the wrappage.
	Bale forming belts contacting each other.	See DIAMOND SURFACE ON BALE FORMING BELTS ARE RUBBING TOGETHER in this section.
Belt edges fuzzy.	Normal break-in.	After break-in period, the fuzziness will stop. Trim loose cords.
Excessive wear on belt guides or tension arm.	Improper belt tracking or tension arm rear tips not centered.	Adjust the belt tracking. (See ADJUST BELT TRACKING in Service—Baler section.) Check for grooves worn into the tension arm wear channels. (See TENSION ARM WEAR CHANNELS in Lubrication and Maintenance section.) Center tension arm rear tips and replace tension arm wear channels. (See your John Deere dealer or qualified service provider.)
Belts pinched between the lower gate roll and the axle tube.	Gate is closing before the tension arm removes slack from the belts.	Operate the tractor at full rpm when closing the gate to ensure that the tension arm tightens belts. If equipped with the net wrap system, the flow restrictor valve supplied with the bundle must be installed. Make sure that the tractor SCV is not placed into the float position when closing the gate.
	Tractor selector control valve lever in detent while closing gate.	Adjust the selector control valve lever for no detent, so lever returns to neutral when released. (See your tractor operator's manual.)
	Sticking or contaminated check valves in the tensioning valve.	Repair or replace as necessary. (See your John Deere dealer or qualified service provider.)
Belts turn over or cross.	Closing gate with PTO engaged and strong winds prevailing and side hill operation.	Install Auxiliary Take-up Roll to reduce the belt slack during bale discharge. See ATTACHMENTS section and your John Deere dealer.
	Operating baler empty with gate up and no tension on belts for extended periods.	Do not operate in this manner for an extended time.

Symptom	Problem	Solution
	Driving too long on one side of the windrow at the bale start. Hay pushes out between the belts.	Center the pickup on the windrow at the bale start.
Belts do not track properly.	Belt tracking rollers out of adjustment.	Adjust the rollers. (See ADJUST BELT TRACKING in Service—Baler section.)
	Belts not correct length.	Correct the belt length. (See REPAIR BELTS in Service—Baler section.)
	Belts not cut square when splicing.	Resplice the belt. (See REPAIR BELTS in Service—Baler section.)
	Twine or mud buildup on baler rolls.	Remove the buildup.
	Belts not routed correctly.	See belt routing diagram and reroute belts. (See INSTALL BELTS in Service —Baler section.)
	Bad bearing on roll.	Rotate all rolls by hand and inspect for loose bearings. Repair or replace as necessary. (See your John Deere dealer or qualified service provider.)
New belts track back and forth on the rolls.	Wax from belts builds up on the rolls.	Use oil dry granules to polish rolls. (See CHECK BELT TRACKING in Service—Baler section.)
	Belts not correct length.	Belt lengths need to be within 38 mm (1.5 in) of each other. (See REPAIR BELTS in Service—Baler section.)
	Bad fabric or construction of belt.	Repair or replace the belt. (See procedures in Service—Baler section.)
New belts cross and flip on rolls while raising and lowering gate	Wax from belts builds up or rolls. High belt friction from sticky silicone on belts. High roller friction from paint on rolls.	Use oil dry granules to polish rolls. (See BELT TRACKING ISSUES in Preparing the Baler section.)
	Improper belt tracking at belt guides.	Install Auxiliary Take-up Roll to reduce the belt slack during bale discharge. See ATTACHMENTS section and your John Deere dealer.
	Sticky or contaminated check valves in tension valve causes tension arm to lower slowly during gate closing.	Repair or replace as necessary. (See your John Deere dealer or qualified service provider.)
Tension arm rubbing the side sheet.	Tension arm not centered between the sides.	Adjust the tension arm. (See ADJUST BELT TRACKING in Service—Baler section.)

Symptom	Problem	Solution
Crop builds up at the tension arm or upper belt guides.	Crop gets pinched between the lower drive roller tube and belts. Crop sticks to the back of the belts and travels up the front of the baler.	Make sure that belts are centered on the rubber strips of the drive roll. (See ADJUST BELT TRACKING in Service —Baler section.)
		Engage the soft core option, if equipped, for the first 914 mm (36 in) of the bale. (See ADJUST VARIABLE CORE DIAMETER in Operating the Baler section.)
		Install the silage auger kit. The auger scrapes crop from the back of belts, allowing crop to fall back onto windrow. (See your John Deere dealer or qualified service provider.)
	Excessive wear of the lower drive roll strips.	Replace the lower and upper drive rolls. (See your John Deere dealer or qualified service provider.)

DP99999,0000E2E-19-26OCT17

Push Bar Difficulties

Symptom	Problem	Solution
Push bar misses bale.	Bale does not drop from chamber freely when gate is opened.	Reduce bale density until baler has made several bales to polish sidesheet. (See ADJUST BALE DENSITY in Operating the Baler section.)
		See your John Deere dealer for bale chamber inspection.
	Push bar cross tube installed backwards.	Install cross tube correctly.
	Chain retainer or gate pin swings push bar back.	Use correct bolts in chain connector links.
		Shim push bar frames to clear gate pins during gate swing cycle.
	Push bar leaves home position early.	Make sure push bar arm pivots are not lubricated.
		Operation in steep hills can require backing up and ejecting bale on cross-hill or level ground, or locking out push bar.
		Replace weak springs.
	Gate opens too fast.	Gate opening time is too short. Set to five second minimum.

Symptom	Problem	Solution
Push bar has insufficient force to move bale.	Flow restrictor valve installed upside down in gate lock valve.	Install flow restrictor valve on fitting with pin closest to the bottom. (See your John Deere dealer.)
	Operating in too steep of hills.	Lock out push bar and back up to eject bales. Eject bales cross-hill.
	Discharging bale at low rpm.	Operate tractor at full rpm.
	Hesitation during gate opening cycle.	Hold tractor selector control valve lever until push bar cycle in completed.
Twine unrolls off bale.	Loose ends of twine gets caught by crop stubble as push bar rolls the bale.	Allow bale to make 2—3 turns before raising the gate.
		Slow gate lift time by using tractor selector-control valve, so bale does not roll far.
		Use mechanical twine guide to control end-wrap distance instead of monitor-controller adjustment. (See SET TWINE END WRAP DISTANCE in Operating the Baler section.)
		Increase twine tension. (See ADJUST TWINE TENSION in Operating the Baler section.)
		Disengage push bar. (See LOCK OUT BALE PUSH BAR in Operating the Baler section.)
		Use re-extension or cinch wrap programs.

PP98408,0001092-19-11FEB13

High-Moisture Kit Difficulties (Silage Baling)

NOTE: See Bale Wet Hay in Operating the Baler section for proper baling procedures when making silage bales.

Symptom	Problem	Solution
Starter roll wraps with scraper installed.	Damaged scraper bar or too much clearance between scraper and starter roll bars.	Repair or replace scraper bar. (See Adjust Starter Roll Scraper [If Equipped] in Service—Baler section.)
	Nicks on starter roll bars catch hay.	Remove nicks with a file.
Excessive main drive clutch slippage.	Rocks caught between cleaning auger and staggered roll.	Remove rocks. Check for bent cleaning auger. Raise pickup height. (See Adjust Pickup Height in Operating the Baler section.)

Symptom	Problem	Solution
Staggered belt roll wraps in center of roll.	Acceptable if not over 8 mm (0.315 in) thick. Generally do not continue to grow.	Remove wrappage once a day or as necessary.
		(460M) Install cleaning auger bundle. (See your John Deere dealer or qualified service provider.)
Ticking noises while running empty baler.	Scrapers contacting spirals or starter roll bars. Spirals contacting side sheet.	Adjust scraper to obtain 0.5—0.8 mm (0.02—0.03 in) clearance to spiral on the roll. Center roll in the side sheet as necessary.
	Cleaning auger contacting staggered roll.	Check clearance between auger and staggered roll. (See Adjust Clearance Between Cleaning Auger And Staggered Belt Roll in Service—Baler section.)
Belts slipping or not turning.	Excessive side sheet friction caused by buildup on side sheets.	Be sure that gate deflectors are installed in gate. Remove buildup by scraping or using high-pressure washer. Avoid baling when moisture content causes buildup. Bale crop when moisture content is different.
	Dry crop conditions.	See Bale Short, Dry, Slick Crop.
	Water dripping down from belts and rolls.	Avoid baling in rain or frosted conditions. Reduce bale density. (See Adjust Bale Density in Operating the Baler section.)
	Belts pinched between gate roll and baler axle.	Operate tractor at full rpm when closing the gate. This allows the tension arm to tighten the belts before gate is closed.
	Upper tension arm compression spring out of adjustment.	Adjust spring. (See Adjust Take-Up Arm Compression Springs in Service —Baler section.)
Crop buildup at ends of cleaning auger.	Cleaning auger installed incorrectly (flighting moves crop to outside).	Turn cleaning auger roll end for end. Auger flighting must move crop toward center of baler when top of auger rotates forward.
		Check clearance between auger and staggered roll. (See Adjust Clearance Between Cleaning Auger And Staggered Belt Roll in Service—Baler section.)

Symptom	Problem	Solution
Bale does not eject.	Bale sticks in the front frame due to buildup on baler sides.	Remove buildup. Be sure that gate deflectors are installed in gate.
		Avoid baling when moisture content causes buildup. Bale crop when moisture content is different.
	Belt tension arm not returning all the way down to tension belts.	Operate tractor at full rpm when closing the gate. This allows the tension arm to tighten the belts before gate is closed.
	Belts too long.	Check belts for correct length. (See Repair Belts in Service—Baler section.)
Bale sticks in chamber.	New baler.	Reduce density until bales have worn paint off the side sheets. (See Adjust Bale Density in Operating the Baler section.)
		Follow break-in instructions in Operating the Baler section.
	Bale density too high.	Turn adjustable relief valve knob counterclockwise to decrease density. (See Adjust Bale Density in Operating the Baler section.)
		Check relief valve. Replace if defective. (See your John Deere dealer or qualified service provider.)
	Damp crop or gummy buildup on side sheets.	Clean side sheets.
		Be sure that gate deflectors are installed in gate.
		Remove paint from inside of side sheets.
	Excessive side sheet friction.	Check straightness and straighten front side sheets of the baler if needed. (See your John Deere dealer or qualified service provider.)

DP99999,0000D1C-19-27OCT17

Net Wrap Difficulties

Symptom	Problem	Solution

Symptom	Problem	Solution
Net wrap material wrapped around the rubber feed roll. **IMPORTANT: Do not cut net wrap material from the rubber feed roll. Any knife cuts in the rubber roll covering can result in more frequent wrapping around the roll and can require roll replacement. (See Correct Net Wrap Feeding Problems in Service—Net Wrap section.)**	Brake torque too low.	Adjust brake (See Check And Adjust Net Wrap Feed Roll Brake in Service —Net Wrap section)
	Lower portion of the front sheet is too far away or too close to rubber roll.	Bend lower portion of the front sheet to obtain 3—6 mm (0.12—0.24 in) clearance between the front sheet and rubber roll. (See Check Front Sheet To Rubber Roll Clearance in Service—Net Wrap section.) (See your John Deere dealer or qualified service provider.)
	Net looped away from the steel roll and contacting counterknife angle.	Adjust brake (See Check And Adjust Net Wrap Feed Roll Brake in Service —Net Wrap section)
	Counterknife angle is not raising high enough.	Check idler. (See Check And Adjust Net Wrap V-Belt Idler Tension in Service—Net Wrap section.)
	Static electricity or dampness is causing the net wrap material to cling to the roll.	Dust the rubber drive roll and the outer side of the net wrap with granular oil absorbent (oil dry)
	Net wrap clings to the rubber roll from the weight of the net wrap for extended periods of time (overnight or longer).	Unlock and relock the brake on the V-Belt pulley before each use.
	Dirt, crop material, rust, or roughness on pan surface.	Clean and polish the upper pan surface with SCOTCH-BRITE® or ultra fine sandpaper. Polish marks must be parallel to movement of mesh.
	Hole wear in the surface wrap side panel causes reduction in brake torque.	Check for hole wear in the side panel. (See Check Hole Wear In Surface Wrap Side Panel in Service—Net Wrap section.)
		Weld key stock to the side panel. (See your John Deere dealer or qualified service provider.)

SCOTCH-BRITE is a trademark of the 3M Company.

Symptom	Problem	Solution
	Dust and moisture on surface of rubber roll causing the net wrap to stick to roll.	Check that the tape across the cover hinge joint at the top of the cover is intact. Replace if necessary. (See your John Deere dealer or qualified service provider.)
		Clean rolls.
		Dry off rolls if dew is present. Thread the net wrap.
	Contact between v-belt idler sheave bolt head and pan bolt head or strap does not allow counterknife angle to contact knife.	Check for contact between bolt heads. (See Check For Left-Hand Side Counterknife Contact in Service—Net Wrap section.)
		Bend out left-hand counterknife arm. Remove washer between idler sheave and left-hand counterknife arm if necessary to align idler. (See your John Deere dealer or qualified service provider.)
		Grind net pan bolt head or grind chamfer at the front edge of the net pan strap.
	Nicks or cuts on the rubber feed roll.	Repair cuts or nicks. (See Repair Cuts On Rubber Feed Roll in Service—Net Wrap section.)
	Lower net wrap guide (pan) not contacting belts.	Adjust net pan pressure. (See Check And Adjust Net Pan Pressure in Service—Net Wrap section.)
		Straighten net pan angle. (See Check And Straighten Net Pan Angle in Service—Net Wrap section.)
	Net switch plate attached to the gate frame can cause right-hand side of net to hesitate and wrap on rubber roll.	Remove plate if slack belts do not cause net switch error codes.
	Counterknife angle not holding the net wrap.	See Adjust Net Wrap Counterknife in Service—Net Wrap section.
		Clean brush. (See Install And Adjust Net Wrap Brush in Service—Net Wrap section.)
	Feed roll pressure set too high.	Adjust feed roll pressure. (See Adjust Net Wrap Feed Roll Pressure in Service—Net Wrap section.)

Symptom	Problem	Solution
	Long or uneven tails after cut-off.	(See Adjust Net Wrap Counterknife And Sharpen Net Wrap Knife in Service—Net Wrap section.
	Rubber roll damaged or sticky.	Clean by wiping with a clean rag or soap and water. NEVER use solvents. Replace roller if damaged.
	Net wrap material sticky from adhesive used in packaging.	Remove any sticky material from the supply roll by unrolling, cutting, and discarding.
	Crop deflectors (belting) bent to rear and do not allow counterknife angle to raise high enough.	Check for bent deflectors (belts). (See Check For Bent Rubber Crop Deflectors in Service—Net Wrap section.)
		Remove deflectors if not baling cornstalks, milo, or sorghum. Trim deflectors. (See your John Deere dealer or qualified service provider.)
	Net wrap material improperly routed, or too much of the end loop started through feed rolls when threading.	Route and thread the net wrap correctly. (See Thread And Route Net Wrap Material in Preparing Baler for Net or B-Wrap section.)
Net wrap material wrapped around top idler roll. (No. 11)	Bale diameter too large.	Reduce bale diameter
		Avoid barrel-shaped bales.
	Belts are muddy and sticky.	Clean belts.
	Belts are full of burrs or thorns.	Clean belts.
	Belt lacing pins are catching the net wrap material.	Make sure that splices are smooth.
	Net not cutting off cleanly	Sharpen knife, adjust cut-off angle to obtain clean cut-off. (See Sharpen Net Wrap Knife in Service—Net Wrap section.)
		Remove and clean brush behind cut-off knife.
Net wrap material wrapped around No. 8 roll spirals	Too much clearance between knife and counterknife angle, especially in middle. Center area cut is delayed and creates outside tails that can wrap spirals.	Adjust knife-to-counterknife angle clearance. (See Adjust Net Wrap Counterknife in Service—Net Wrap section.)
	Crop and dirt buildup at top of brush prevents counterknife angle from contacting knife.	Remove, clean, and install brush. (See Install And Adjust Net Wrap Brush in Service—Net Wrap section.)

Symptom	Problem	Solution
	Nicks and burrs on spirals.	Remove burrs with a hand file.
		Tighten left-hand side No. 8 roll support hardware.
		Avoid making oversize bales that deflect left-hand side No. 8 roll into frame.
	Crop deflectors (belting) bent to rear, splitting net approximately 75 mm (3 in) from the edge of net. Loose tails can wrap on No. 8 spirals.	Reverse or replace deflectors.
		Remove if not baling cornstalks, milo, or sorghum.
		Trim deflectors. (See your John Deere dealer or qualified service provider.)
Bale not wrapped (Alarm Sounds), Stop and Net Wrap indicators are displayed, and E401 error code is displayed.	Wrap material incorrectly threaded.	Rethread net. (See Thread And Route Net Wrap Material in Preparing Baler for Net or B-Wrap section.)
	Net wrap material wrapped around the rubber feed roll.	Remove material from roll. (See Net Wrap Difficulties in this section.) (See Correct Net Wrap Feeding Problems in Service—Net Wrap section.)
	Net wrap material not started between the feed roll.	Rethread net. (See Thread And Route Net Wrap Material in Preparing Baler for Net Wrap section.)
	Net wrap roll is installed backwards.	Install roll correctly. (See Thread And Route Net Wrap Material in Preparing Baler for Net or B-Wrap section.)
	Net wrap feed roll drive not engaged.	Check for broken, worn, or too long V-belt. (See Check And Adjust Net Wrap V-Belt Idler Tension in Service—Net Wrap section.)
		Check for binding at the counterknife arm pivots and the V-belt idler pivot.
		Check for movement of actuator.
	Feed roll pressure set too low.	Adjust feed roll pressure. (See Adjust Net Wrap Feed Roll Pressure in Service—Net Wrap section.)
	Roll of net wrap material larger than 305 mm (12 in).	Use correct size roll of the net wrap. (See your John Deere dealer or qualified service provider.)

Symptom	Problem	Solution
	Net wrap supply roll is empty.	Install new roll. (See Thread And Route Net Wrap Material in Preparing Baler for Net or B-Wrap section.)
	Actuator not moving.	See your John Deere dealer or qualified service provider.
	Excess paint or paint runs on top surfaces of the net pan are rough and can cause feeding problems.	Remove excess or rough paint and polish.
Bale not wrapped. (No Alarm, Stop And Net Wrap indicators not displayed).	Net wrap fed to other areas of the machine:	Locate and remove the net wrap material before making the next bale. Otherwise, improper belt tracking and further incorrect feeding can result, if material is not removed promptly and the cause is not corrected.
	A) Starter roll wrappage.	Remove all burrs, weld splatters, rough spots, and imperfections on the starter roll. Mud or sticky crop residue can cause occasional starter roll wrappage.
	B) Net wrapped on top idler roller	Bale diameter too large. Reduce baler diameter to 152 mm (60 in) or smaller. (Measure a bale to check actual bale size.) Avoid making barrel-shaped bales. (See Weave In The Windrow in Operating the Baler section.) Check for mud or sticky crop on belts and rolls. Clean if necessary. Make sure that all belt pin ends are pointed toward back side of the belt toward rolls, so the net wrap does not catch on bent ends of the pins. Check for cut or damaged belt surface. Trim loose belt edges, repair, or replace. (See Repair Belts in Service—Baler section.)
	C) Baler drive roll wrappage.	Do not damage rubber strips when removing the net wrap material.
	D) Net splitting.	See Net Wrap Is Split Around Bale Or Stays Behind The Pickup in this section.

Symptom	Problem	Solution
	E) Net wrap is caught in rough belt splices (net wrap is not transferred from belts to bale during the net application cycle).	Make sure that splices are smooth.
		Inspect and repair broken or damaged belt splices.
	F) Net wrap bunched behind the lower belt guide on gate due to crop buildup.	Remove crop buildup from lower gate area. In some crops, reducing PTO rpm while baling reduces buildup tendency. Ejecting the bale with the PTO running reduces buildup in some conditions. (See Bale Short, Dry, Slick Crops in Operating the Baler section.)
		For some extreme crop conditions, install Build-Up Reduction Scraper Kit. (See Attachments section.)
	G) Bale forming belts sticky from silage buildup.	Diamond pattern on belts must be dry. Bale silage at a lower moisture content.
	H) Broken or damaged belt splices.	Repair belt splices.
	I) Adjacent belts track toward each other, causing belts to pinch and pull the net wrap around the rolls.	To improve the belt tracking, adjust the belt tracking or move belt to another location. (See Adjust Belt Tracking in Service—Baler section.)
		Remove wrappage on baler rolls.
	Actuator or controller disconnected.	Check connections and wires.
	Monitor-controller not in NET mode.	Put monitor-controller selector switch on NET position.
Net does not start to feed. (If cover is open, net feeds.)	Shock absorber contacts the end of the bolt on the upper plastic roller arm.	Replace bolt with 5 mm (0.20 in) shorter bolt or grind the end of the bolt flush with nut. Repeat on both sides.
Bale not uniformly wrapped (No Alarm—Stop and Net Wrap indicators are NOT displayed).	Buildup of crop material behind the lower belt guide on gate.	Clean out buildup. In some crops, reducing PTO rpm reduces buildup tendency. Ejecting bale with PTO running reduces buildup in some conditions.
		Install Build-Up Reduction Scraper Kit. (See Attachments section.)
	Insufficient number of net wrap layers.	Make sure that the net wrap supply roll has not run out.

Symptom	Problem	Solution
		Controller must be set to apply a minimum of two net wrap layers. (See Set Number Of Net Wrap Layers in Operating the Baler section.)
	Net wrap buildup at rear of pan.	Net wrap pan is not contacting belts at rear of pan. Adjust pan to contact belts.
	Holes worn in the rear of pan catching net wrap.	Adjust net pan pressure. (See Check And Adjust Lower Net Wrap Guide in Service—Net Wrap section.)
	Belts not tracking properly.	See Adjust Belt Tracking in Service—Baler section.
	Too much tension on net wrap causing holes or tears in the net wrap.	Reduce the net wrap tension by adding shims between pulley halves. See (Adjust Net Wrap Stretch in Service—Net Wrap section.)
	Net wrap cover not closed.	Cover must be closed and latched for best bale coverage.
	Net wrap cover gas springs weak.	Check springs on both sides of the net wrap cover. Replace if necessary.
	Windguard angle damaged or missing on the MegaWide™ Plus pickup frame.	Install angle. (See your John Deere dealer or qualified service provider.)
	Net wrap not routed between steel and rubber roll.	See Load Net Wrap Material in Preparing Baler for Net Wrap section.
	Roll of the net wrap material too narrow.	See your John Deere dealer or qualified service provider. Use only approved material for best results.
	Net wrap partially on bale, partially on the feed roll or baler roll.	See Bale Not Wrapped (Cut-Off Signal Does Activate) in this section.
	Bale has crop between the layers of net wrap on the bale or loose crop is outside the net wrap on the bale.	Stop forward travel immediately when the full bale alarm stops. Net wrap begins to feed at that time, and any crop picked up after this time is placed between the layers of net wrap or outside the wrapping.
		Adjust monitor to delay starting wrap on CH026.

Symptom	Problem	Solution
Alarm Sounds. Stop And Net Wrap indicators are displayed on monitor-controller and alarm sounds when the bale is wrapped correctly. E401 or E402 error codes are displayed.	Switch activating flap is not adjusted or binding.	Adjust and correct binding or lube pivots. (See Check And Adjust Net Wrap Switch in Service—Net Wrap section).
	Net wrap material is not cut off cleanly.	Sharpen the net wrap cut-off knife. (See Sharpen Net Wrap Knife in Service—Net Wrap section.)
		Adjust the net wrap knife arm brake. (See Check And Adjust Net Wrap Feed Roll Brake in Service—Net Wrap section.)
		Tighten the rubber roll pressure springs. (See Adjust Net Wrap Feed Roll Pressure in Service—Net Wrap section.)
	Net wrap switch needs adjustment.	Adjust. (See Check And Adjust Net Wrap Switch in Service—Net Wrap section.)
	Return spring on the net wrap switch is missing or damaged.	Replace spring.
	Cut-off indicator flap binding.	Check for bent or damaged parts. Repair or replace as necessary.
	Switch failed.	Check the net wrap switch. (See Check And Adjust Net Wrap Switch in Service—Net Wrap section.) Replace if necessary.
	Wire connections unplugged, corroded, or dirty.	Inspect connections in harness next to oversize bale switch, ahead of the net wrap unit on the right-hand side, and at the net wrap microswitch.
Net wrap not cut off at end of wrapping cycle. (Alarm Sounds—Stop and Net Wrap indicators are displayed.) E402 error code is displayed.	Brake on the rubber feed roll is out of adjustment or worn.	Check and adjust brake. (See Check And Adjust Net Wrap Feed Roll Brake in Service—Net Wrap section.)
	Cut-off angle not returning to cutting position freely.	Check for proper lubrication and binding at the knife arm pivots. See your John Deere dealer or qualified service provider if binding occurs.
		Check for voltage to the net actuator.

Symptom	Problem	Solution
	Dull knife.	Sharpen knife with a file. Knife must be sharp for a clean cut-off. (See Sharpen Net Wrap Knife in Service—Net Wrap section.)
	Net wrap cover is open.	Cover must be closed for best cut-off.
	Cut-off angle out of adjustment.	Adjust. (See Adjust Net Wrap Counterknife in Service—Net Wrap section).
		Remove and clean brush.
	Net wrap tails hold net switch actuator down.	See solutions listed for a dull knife and cut-off angle adjustment.
Net wrap loose around bale.	Inadequate tension on net.	Increase tension (See Adjust Net Wrap Stretch in Service—Net Wrap section.)
	Net Wrap traveling over idler roll (No. 11) due to too large bale.	Ensure that bales are not larger than 183 cm (72 in) when measured. Reduce monitor size setting if necessary.
		Make smaller bales. (See Set Bale Diameter in Operating the Baler section.)
	V-belt idler out of adjustment.	Check idler. (See Check And Adjust Net Wrap V-Belt Idler Tension in Service—Net Wrap section.)
	Weak gas springs.	Check springs for proper force.
	Too many net wrap layers applied.	Normally no more than three net wrap layers are needed. Excess layers can appear to be loose.
Varying number of net wrap layers from one bale to the next (without slip clutch alert).	Varying PTO speed while wrapping from one bale to the next.	Maintain rated PTO speed while applying the net wrap. If difficult crop conditions require varying PTO speed while baling, return to rated speed for applying the net wrap.
		Turn slip clutch alert PTO speed sensor on to control spacing independent of speed.

Symptom	Problem	Solution
	Bale size and shape not uniform.	Make bales uniform in shape. Follow operating instructions in Operating the Baler section. *NOTE: If applying net to a smaller bale with override switches, the small bale has more net wrap layers unless the controller is readjusted.*
	Too much clearance between the net wrap guide pan and belts.	Adjust rear of pan to contact belts at the lower rear gate roller (see Check And Adjust Lower Net Wrap Guide in Service—Net Wrap section.)
Net wrap is split around bale or stays behind the pickup.	Buildup of crop stems in gate lower belt guide area.	Remove buildup. In some crops, reducing PTO rpm reduces buildup tendency. Ejecting bale with PTO running reduces buildup in some conditions.
	Oversize bale compresses crop buildup in the lower gate belt guide area.	Adjust the oversize bale switch. (See Adjust Oversize Bale Switch in Service—Baler section.) Remove buildup. In some crops, reducing PTO rpm reduces buildup tendency. Ejecting bale with PTO running reduces buildup in some conditions. (See Adjust Oversize Bale Switch in Service—Baler section.) Actual bale size is larger than displayed diameter. Adjust bale size display to match actual diameter. (See Adjust Bale Diameter Display in Operating the Baler section.)
	Oversize bale can allow some strands of net to wrap around number 11 idler roller.	Adjust the oversize bale switch. (See Adjust Oversize Bale Switch in Service—Baler section.) Remove net from all rollers. Actual bale size is larger than displayed diameter. Adjust bale size display to match actual diameter. (See Adjust Bale Diameter Display in Operating the Baler section.)
	Too much pressure between the net wrap pan channels and belts, causing net to become hot.	Check net pan pressure. (See Check And Adjust Net Pan Pressure in Service—Net Wrap section.) If a net pan channel is bowed up, straighten to match other channels.

Symptom	Problem	Solution
	Stemmy crops causing splitting or snagging.	Use more layers of the net wrap material.
	Clearance exceeds 5 mm (0.20 in) between lower guide crossbar and belt guide straps. (Belts track underneath belt guides and split net.)	Check for proper clearance. (See Check And Adjust Lower Net Wrap Guide in Service—Net Wrap section.)
	Insufficient clearance between lower guide crossbar and belt guide straps. (Net contacts belt guides.)	Check for proper clearance. (See Check And Adjust Lower Net Wrap Guide in Service—Net Wrap section.)
	Clearance between lower guide crossbar and belt guide straps is 3—4 mm (0.12—0.16 in) and causes crop to hairpin around belt guides and split net in cornstalks, cane, or sorghum crops.	Set clearance between lower guide crossbar and belt guide strap to 4—5 mm (0.16—0.20 in). (See Check And Adjust Lower Net Wrap Guide in Service—Net Wrap section.)
	Belts not tracking correctly.	See Adjust Belt Tracking in Service—Baler section.
	(MegaWide™ HC2 Feed System Only): External lower gate belt guides adjusted too close to the No. 9 roll.	Set clearance between the flat dove tail and the diamond tread on the belt to no more than 1 mm with the spiral on the No. 9 roll positioned under the guide. See Check and Adjust Lower Belt Guides (MegaWide™ HC2 Feed System).
	Material snagging on splices or pins.	Make sure that splices are smooth.
Net wrap breaking due to excess tension.	Incorrect number of shims between pulley halves for the net wrap being used.	See Adjust Net Wrap Stretch in Service—Net Wrap section.
	Not enough net wrap layers.	Adjust for at least two full net wrap layers. Use more layers of net in difficult crops like straw and corn stalks.
Cover does not stay open.	Weak gas springs.	Replace springs.
Cover will not open.	Brake lever not engaged. Lever contacts shock absorber mounting.	Engage brake lever before closing cover. Add washers to the brake lever pivot pin to reduce lever end play.
Net is not out to edge of bale. (Using edge to edge material)	Roll of net too narrow.	See your John Deere dealer or qualified service provider. Use only approved material for best results.

MegaWide is a trademark of Deere & Company

Symptom	Problem	Solution
	Roll of net wrap is not centered in baler.	Use centering plugs. See your John Deere dealer or qualified service provider.
	Overfilling ends of bale producing an hourglass-shaped bale. Ensure that net extends to the ends of the bale in the chamber. Net moves away from the ends of bale after discharging bale.	Decrease windrow width, especially if equipped with a MegaWide™ Plus pickup (460M).
CoverEdge™ material not going over the edge of bale.	Crop material blocking the net wrap path.	Remove crop, check scraper, and cast gate filler adjustments.
		Reduce rpm. (See BALE SHORT, DRY, SLICK CROPS in Operating the Baler.)
	Belt tracking incorrect.	Be sure right-hand or left-hand end belts do not continuously contact guide washers. On pan, belts must be centered between washers.
	Not enough tension on net wrap.	Check tension. If needed, Increase tension by removing approximately two shims from between pulley halves. (See ADJUST NET WRAP STRETCH in Service—Net Wrap section).
Approximately 250 mm (10 in) of the CoverEdge™ net is cut or torn at the bale edge on one or both sides.	When distance (1—3 mm [0.04—0.12 in]) between lower rear corner of gate casting and side sheet exceeds 3 mm (0.12 in), gate casting can catch and damage net during discharge.	Check distance between lower rear corner of gate casting and side sheet by placing feeler gauge against side sheet. If 3 mm (0.12 in) distance is exceeded: 1. Remove, clean, reinstall, and recheck clearance. 2. Heat and bend lower rear corner within 1—3 mm (0.04—0.12 in) of the side sheet. 3. Replace gate casting.
Metal strip not detected during a B-Wrap cycle.	Sensor not adjusted properly.	Ensure that B-Wrap sensor is adjusted within specification. (See Adjust B-Wrap Sensor in Service—Net Wrap section.)
	Net not feeding properly causing metal strip not to pass the sensor.	Make sure that there is no buildup of net on the left-hand side of the net system and baler.

CoverEdge is a trademark of Deere & Company

Symptom	Problem	Solution
B-Wrap tail too long or short after velcro strips.	B-Wrap cut position needs to be adjusted.	If tail length is too long, decrease cut parameter. If tail length is too short, increase cut parameter. (See Adjust B-Wrap Cut Position in Operating the Baler section.)
Overlap of breathable section of wrap is oriented incorrectly (not between noon and six o'clock when looking at the left-hand side of bale).	B-Wrap seam orientation offset needs to be adjusted.	Increase orientation parameter if the bale needs to rotate counterclockwise when looking at the left-hand side of the bale. Decrease orientation parameter if the bale needs to rotate clockwise when looking at the left-hand side of the bale. (See Adjust Bale Orientation in Operating the Baler section.)
	PTO is not turned off before ejecting the bale.	Turn off PTO when the beep sequence reaches the end of the countdown. (See Monitor Display For B-Wrap Baling in Operating the Baler section.)

DP99999,0000D1D-19-27OCT17

BaleTrak™ Pro and Plus Monitor-Controller Error Codes

Error Code	Description	Solution
E0 01	Erratic supply voltage when actuator is operating	Check battery Check alternator Check wires and connections Check actuator current draw. See Test Twine or Net Wrap Actuator Current (Channel 018) in Service section.
E0 02	Low Voltage	Check alternator Check wiring harness and connectors for damage. Perform voltage test. See Test Tractor Convenience Outlet Voltage (Channel 019) in Service section
E0 03	High Voltage	Check alternator
E1 02	Bale size sensor disconnected or shorted to ground	Check wires and connectors Check sensor
E1 03	Bale size sensor shorted to power	Check wires and connectors Check sensor
E1 04	Bale size sensor under working range	Calibrate the bale size display. See Calibrate Bale Diameter Display (Channel 005) in Service section. Perform field calibration of bale size display. See Adjust Bale Diameter Display (Channel 028) in Operating the Baler section.
E1 05	Bale size sensor over working range	Calibrate the bale size display. See Calibrate Bale Diameter Display (Channel 005) in Service section. Perform field calibration of bale size display. See Adjust Bale Diameter Display (Channel 028) in Operating the Baler section.
E1 06	Voltage drop	Check battery Check alternator Check wires and connections Perform voltage test. See Test Tractor Convenience Outlet Voltage (Channel 019) in Service section
E1 12	Right bale shape sensor shorted to ground	Check wire and connectors Check sensor
E1 13	Right bale shape sensor shorted to power	Check wire and connectors Check sensor

E1 14	Right bale shape sensor under working range	Check sensor adjustment. See Adjust Bale Shape Sensor (Channel 007) in Service section.
E1 15	Right bale shape sensor over working range	Check sensor adjustment. See Adjust Bale Shape Sensor (Channel 007) in Service section.
E1 16	Voltage drop	Check battery Check alternator Check wires and connections
E1 22	Left bale shape sensor shorted to ground	Check wire and connectors Check sensor
E1 23	Left bale shape sensor shorted to power	Check wire and connectors Check sensor
E1 24	Left bale shape sensor under working range	Check sensor adjustment. See Adjust Bale Shape Sensor (Channel 009) in Service section.
E1 25	Left bale shape sensor over working range	Check sensor adjustment. See Adjust Bale Shape Sensor (Channel 009) in Service section.
E1 26	Voltage drop	Check battery Check alternator Check wires and connections
E2 01	Twine actuator disconnected	Check wires and connectors
E2 02	Twine actuator faulty	Check actuator movement by using the extend and retract buttons on the BaleTrak™
E2 03	Time out error during the twine application cycle	Check for obstruction or binding
E2 04	Twine actuator harness shorted to battery	Check wires and connectors Check twine actuator
E2 05	Twine actuator harness shorted to ground	Check wires and connectors Check twine actuator
E2 11	Net actuator disconnected	Check wires and connectors
E2 12	Net actuator faulty	Check net actuator operation using extend and retract buttons. See Test Twine or Net Wrap Actuator Current (Channel 018) in Service section.
E2 13	Time out error during the net application cycle	Check for obstruction or binding
E2 14	Net actuator harness shorted to battery	Check wires and connectors Check net actuator
E2 15	Net actuator harness shorted to ground	Check wires and connectors Check net actuator
E2 16	B-Wrap end of roll	Replace B-Wrap roll
E2 17	B-Wrap sensor did not detect metal tag	Check B-Wrap roll velcro fasteners Check B-Wrap sensor harness and adjustment
E2 18	B-Wrap failure—PTO shuts off before actuator retracts	Ensure that the PTO is left ON until the monitor prompts it to be shut off for proper cut location
E2 21	Variable core valve disconnected	Check wires and connectors Check variable core valve solenoid
E2 22	Variable core valve shorted to power	Check wires and connectors Check variable core valve solenoid
E2 23	Variable core valve shorted to ground	Check wires and connectors Check variable core valve solenoid
E2 31	Pickup valve disconnected	Check wires and connectors Check pickup valve solenoid
E2 32	Pickup valve shorts to ground	Check wires and connectors Check pickup valve solenoid
E2 33	Pickup valve shorts to battery	Check wires and connectors Check pickup valve solenoid
E2 41	Knives valve disconnected	Check wires and connectors Check knives valve solenoid
E2 42	Knives valve shorts to ground	Check wires and connectors Check knives valve solenoid
E2 43	Knives valve shorts to battery	Check wires and connectors Check knives valve solenoid
E2 51	Drop floor valve disconnected	Check wires and connectors Check drop floor valve solenoid
E2 52	Drop floor valve shorts to ground	Check wires and connectors Check drop floor valve solenoid

E2 53	Drop floor valve shorts to battery	Check wires and connectors Check drop floor valve solenoid
E2 55	Drop floor is detected down and bale size increases by 4 inches	Ensure that the drop floor is up while baling. Check drop floor sensor harness and adjustment.
E3 01	PTO sensor open circuit (Not used on baler with a regular pickup)	Check wires, connectors, and sensor for damage. Check the PTO speed sensor readout on channel 016. See Check PTO and Lower Drive Roll Speed (Channels 016 and 017) in Operating the Baler section.
E3 02	PTO speed less than minimum speed (Not used on baler with a regular pickup)	Check sensor adjustment. Check the PTO speed sensor readout on channel 016. See Check PTO and Lower Drive Roll Speed (Channels 016 and 017) in Operating the Baler section. Readout on display must be approximately 540 or 1000 rpm (depending on speed option). Speed must not vary more than 5 rpm
E3 03	PTO speed exceeds maximum speed (Not used on baler with a regular pickup)	Check sensor adjustment. Check the PTO speed sensor readout on channel 016. See Check PTO and Lower Drive Roll Speed (Channels 016 and 017) in Operating the Baler section. Readout on display must be approximately 540 or 1000 rpm (depending on speed option). Speed must not vary more than 5 rpm
E3 11	Pickup sensor open circuit	Check wires, connectors, and sensor for any damage. Check the PTO speed sensor readout on channel 017. See Check PTO and Lower Drive Roll Speed (Channels 016 and 017) in Operating the Baler section.
E3 12	Pickup speed less than the minimum speed	Check sensor adjustment. Check the lower drive roll speed sensor readout on channel 017. See Check PTO and Lower Drive Roll Speed (Channels 016 and 017) in Operating the Baler section. Readout on display must be approximately 310 rpm for non-precutter and 170 rpm for precutter machines. Speed must not vary more than 5 rpm.
E3 13	Pickup speed exceeds the maximum speed	Check sensor adjustment. Check the lower drive roll speed sensor readout on channel 017. See Check PTO and Lower Drive Roll Speed (Channels 016 and 017) in Operating the Baler section. Readout on display must be approximately 310 rpm for non-precutter and 170 rpm for precutter machines. Speed must not vary more than 5 rpm.
E4 01	Net did not wrap a bale	See Net Wrap Difficulties in the Troubleshooting section.
E4 02	Net did not cut	See Net Wrap Difficulties in the Troubleshooting section.
E4 11	Right gate switch is always open	Check right-hand gate proximity switch adjustment and function. See Test Gate Proximity Switches (Channels 014 and 015) in Operating the Baler section.
E4 12	Right gate switch is always closed	Check right-hand gate proximity switch adjustment and function. See Test Gate Proximity Switches (Channels 014 and 015) in Operating the Baler section.
E4 31	Oversize switch is always open	Check oversize bale switch adjustment and function. See Test Oversize Bale Switch (Channel 013) in Operating the Baler section.
E4 32	Oversize switch is always closed	Check oversize bale switch adjustment and function. See Test Oversize Bale Switch (Channel 013) in Operating the Baler section.
E5 12	5 V sensor supply is shorted to ground	Check wires and connections
E5 13	5 V sensor supply is shorted to power	Check wires and connections

E6 01	EEPROM Scramble—User table, both banks corrupt	Monitor fault. Contact your John Deere dealer or qualified service provider.
E6 02	EEPROM Scramble—User table, only one bank corrupt	Monitor fault. Contact your John Deere dealer or qualified service provider.
E6 03	EEPROM Scramble—Factory table, both banks corrupt	Monitor fault. Contact your John Deere dealer or qualified service provider.
E6 04	EEPROM Scramble—Factory table, only one bank corrupt	Monitor fault. Contact your John Deere dealer or qualified service provider.
E6 05	EEPROM Scramble— EEPROM device failure or software failure	Monitor fault. Contact your John Deere dealer or qualified service provider.
LOnEt	B-Wrap end of roll	Replace B-wrap roll.

BaleTrak is a trademark of Deere & Company

DP99999,0000E2F-19-26OCT17

Detailed Service Information

TS224—UN—17JAN89

See the technical (repair) manual for detailed service information or see your John Deere dealer.

PP98408,0001096-19-11FEB13

Practice Safe Service Procedures

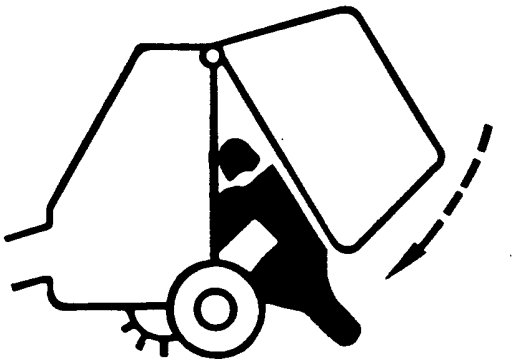

TS698—UN—21SEP89

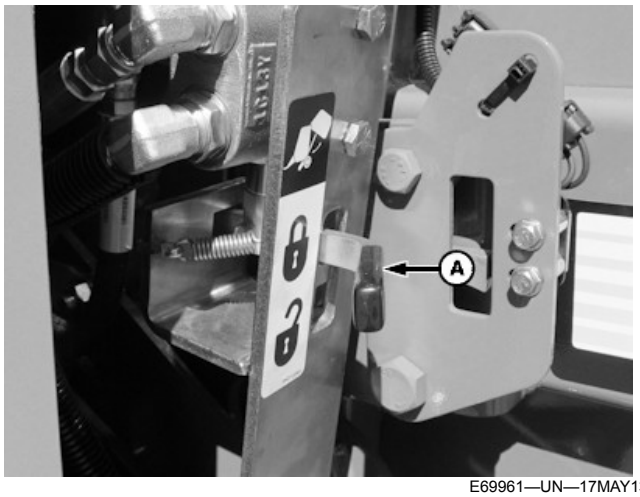

E69961—UN—17MAY13

A—Locked Position

CAUTION: To help prevent personal injury caused by unexpected movement, be sure to service the machine on a level surface.

If machine is connected to a tractor, engage tractor parking brake and place transmission in Park, shut off engine and remove key.

If machine is detached from tractor, block wheels to prevent movement.

Engage gate lock lever when working inside or around baler with an open gate. Failure to do so can result in serious personal injury or death.

Before servicing or adjusting baler:

1. **Disengage all power.**
2. **Shut off tractor engine.**
3. **Wait until all moving parts have stopped.**
4. **Let all components cool.**

IMPORTANT: Disconnect monitor-controller wire harnesses from baler when servicing electrical systems or when welding on baler. Over-voltage can damage the electronic controls.

While working inside or around the baler with an open gate, the gate lock lever must be moved to locked position (A). Use this safety feature any time gate is open. Close gate anytime the baler must be left unattended.

If bale push bar is installed, be sure that bystanders are clear and there is sufficient clearance behind baler when opening gate for service.

If gate is partially raised, push bar can remain in the home position held only by slight spring force. If arms are pushed backwards, they will spring upward slowly under spring force. When servicing machine with gate open, raise gate fully and lock the gate, or lock out push bar. (See LOCK OUT BALE PUSH BAR in Operating the Baler section.)

DP99999,0000D80-19-14JUN17

Fire Prevention

Keep foreign material from building up on the machine near potentially hot areas, such as bearings on the ends of baler rolls and slip-clutch. Remove this buildup as part of the regular service operations and at the end of each use.

Leaf blowers, blower-vacuums, or similar devices can be used to remove loose crop buildup. Compressed air can be used to remove more difficult buildup.

Avoid high-pressure power-washing next to the bearings to prevent damaging seals.

Check bearings regularly for early signs of failure, replace as necessary. Turn off power to baler and check for unusual noises, hot parts, smells of scorching, and discolored paint or metal. Check condition of bearings. (See FIRE PREVENTION in Lubrication and Maintenance section.)

If service operations require using a welder, cutting torch or grinder on the baler, these guidelines can prove useful in preventing a fire:

1. Park baler on pavement or bare ground.
2. Remove chaff to minimize exposure of flammable material to sparks; if chaff cannot be removed, soak it thoroughly with water before starting. Protect hoses and belts from exposure to sparks, arcs, or flames.
3. Be sure a fully charged water-type fire extinguisher or other source of water is ready for immediate use.
4. Use an assistant to watch for fire while welding, cutting, or grinding.
5. After welding, cutting or grinding is finished, wait long enough to allow parts to cool down before starting to bale. Verify that no sparks or slag have started a fire before leaving service area.

PP98408,0001098-19-11FEB13

Keep Service Area Clean

TS218—UN—23AUG88

CAUTION: Understand service procedure before doing work. Keep area clean and dry

Never lubricate, service, or adjust machine while it is moving. Keep hands, feet, and clothing from power-driven parts. Disengage all power and operate controls to relieve pressure. Lower equipment to the ground. Stop the engine. Remove the key. Allow machine to cool.

Securely support any machine elements that must be raised for service work.

Keep all parts in good condition and properly installed. Fix damage immediately. Replace worn or broken parts. Remove any buildup of grease, oil, or debris.

On self-propelled equipment, disconnect battery ground cable (-) before performing adjustments on electrical systems or welding on machine.

On towed implements, disconnect wire harnesses from tractor before servicing electrical system components or welding on machine.

Keep all parts in good condition and properly installed. Fix damage immediately. Replace worn or broken parts. Remove any buildup of grease, oil, or debris.

Disconnect battery ground cable (-) before performing adjustments on electrical systems or welding on machine.

PP98408,0001099-19-11FEB13

Service Tires Safely

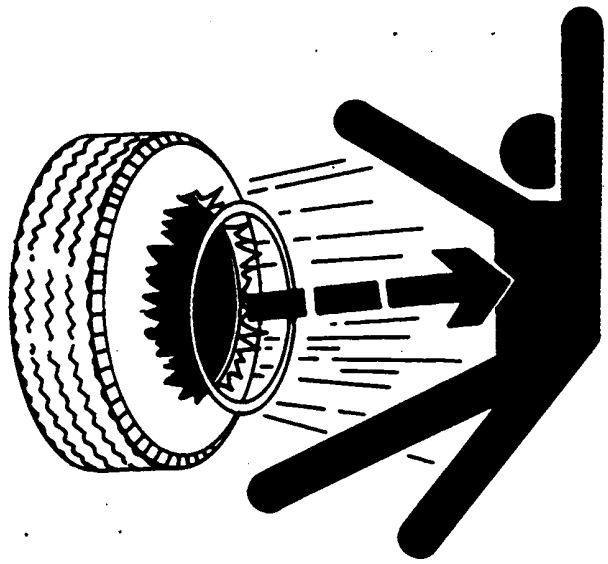

TS211—UN—15APR13

CAUTION: Explosive separation of a tire and rim parts can cause serious injury or death.

Do not attempt to mount a tire unless you have the proper equipment and experience to perform the job.

Always maintain the correct tire pressure. Do not inflate the tires above the recommended pressure.

Never weld or heat a wheel and tire assembly. The heat can cause an increase in air pressure resulting in a tire explosion. Welding can structurally weaken or deform the wheel.

When inflating tires, use a clip-on chuck and extension hose long enough to allow you to stand to one side and NOT in front of or over the tire assembly. Use a safety cage if available.

Check wheels for low pressure, cuts, bubbles, damaged rims or missing lug bolts and nuts.

PP98408,000109A-19-11FEB13

Hydraulic System Diagram

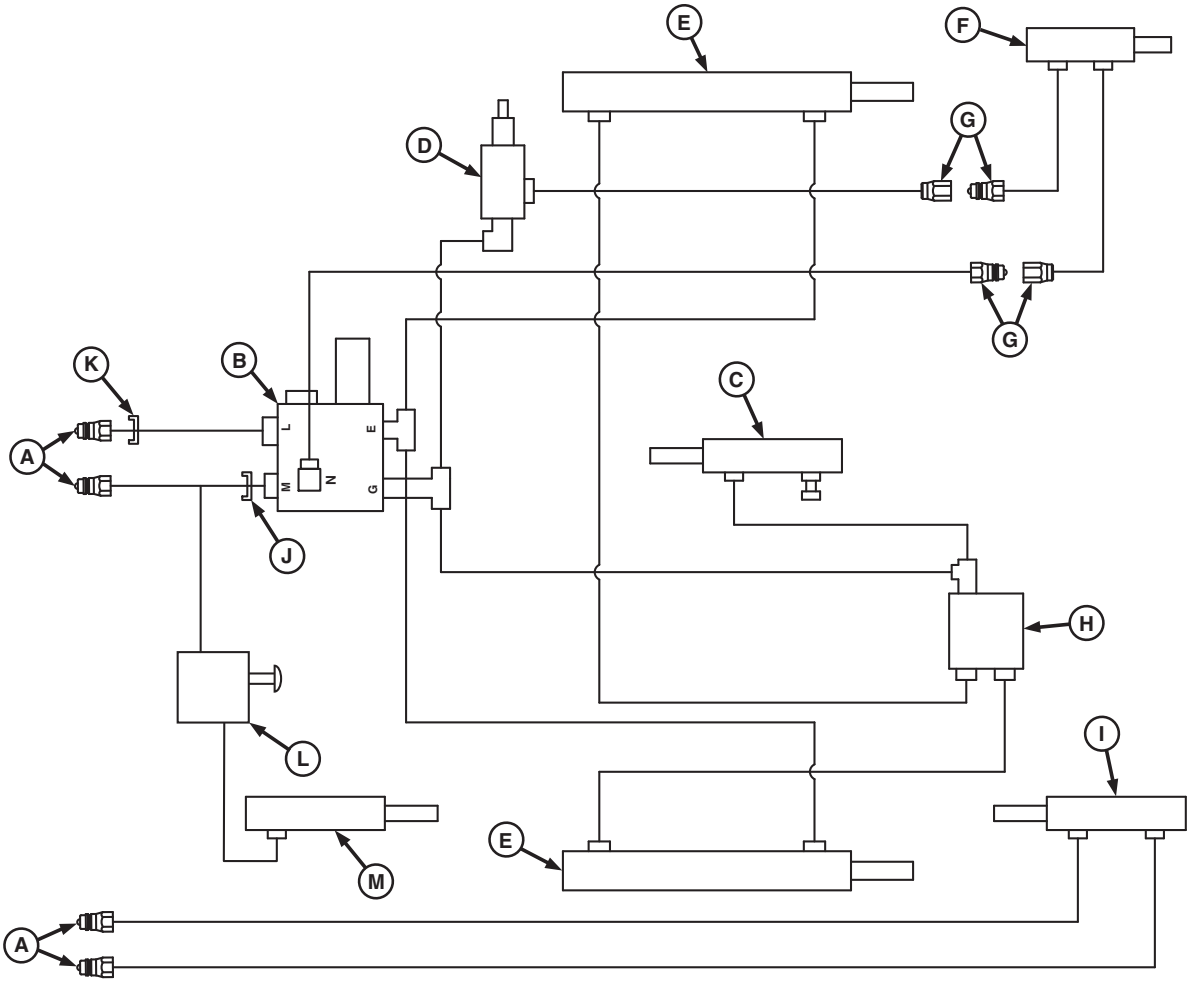

E84046—UN—10AUG17

A—To Tractor SCV Port (2 used)
B—Tensioning Valve
C—Take-Up Arm Cylinder
D—Bale Ramp Regulator Valve (if equipped)
E—Tension or Gate Cylinder (2 used)
F—Bale Ramp Cylinder (optional)
G—Quick-Disconnect Fitting (4 used, if equipped)
H—Gate Lock Valve
I—Pickup Lift Cylinder (if equipped)
J—Orifice (stamped 361)
K—Orifice (stamped 351)
L—Third Roll Drive Valve (precutter only, if equipped)
M—Third Roll Cylinder (precutter only, if equipped)

One set of hydraulic outlets is required to operate the baler.

If the baler is equipped with optional hydraulic pickup lift, an additional set of hydraulic outlets is needed.

An optional hydraulic bale ramp is available. The bale tension or the gate control system operates the bale ramp.

The hydraulic system uses the following major components:

- Tensioning valve (B)—Used to direct oil flow, check flow, and limit hydraulic pressures.
- Tension or gate *(double-acting)* cylinders (E)—Used to raise and lower gate and to control bale tensioning.
- Take-up *(single-acting)* cylinder (C)—Used to provide proper sequencing between the tension arm and gate opening. Also, it helps the control belt slack during gate closing to avoid belt pinching.
- Optional pickup lift *(double-acting)* cylinder (I)—Used to raise and lower pickup using tractor SCV.
- Optional bale ramp *(double-acting)* cylinder (F)—Used to automatically lower or raise bale ramp when gate is opened fully.
- Optional regulator valve (D)—Used to regulate flow to and from the optional bale ramp cylinder (F) for proper sequencing of ramp and gate positions.
- Gate lock valve (H)—Used to block flow of oil to and from base ports of tension or gate cylinders (E).
- Third roll drive valve (L)—Used to control the flow to

the cylinder during the gate open and close cycle. Disengages the third roll drive (extends the cylinder) during opening. Re-engages (springs retract the cylinder) when the gate closes and tension comes down to trigger the poppet valve.

Hydraulic System Diagram—Precutter

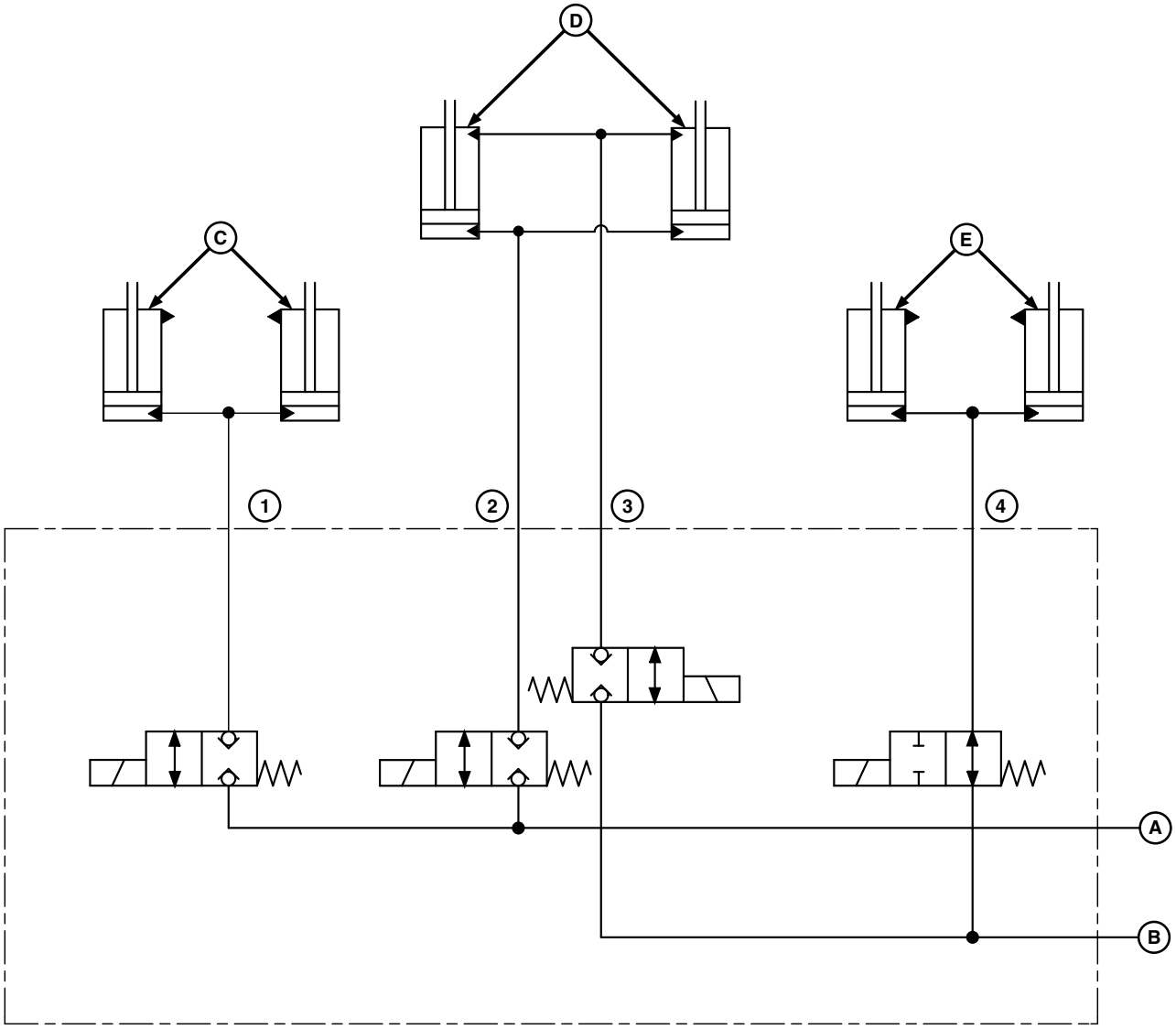

E83624—UN—16AUG17

A—SCV Retract Line
B—SCV Extend Line
C—Knife Engage Cylinder (2 used)
D—Drop Floor Cylinder (2 used)
E—Pickup Lift Cylinder (2 used)

1—Port D
2—Port E
3—Port F
4—Port G

DP99999,0000E31-19-27SEP17

Wire Harness Diagram—Baler

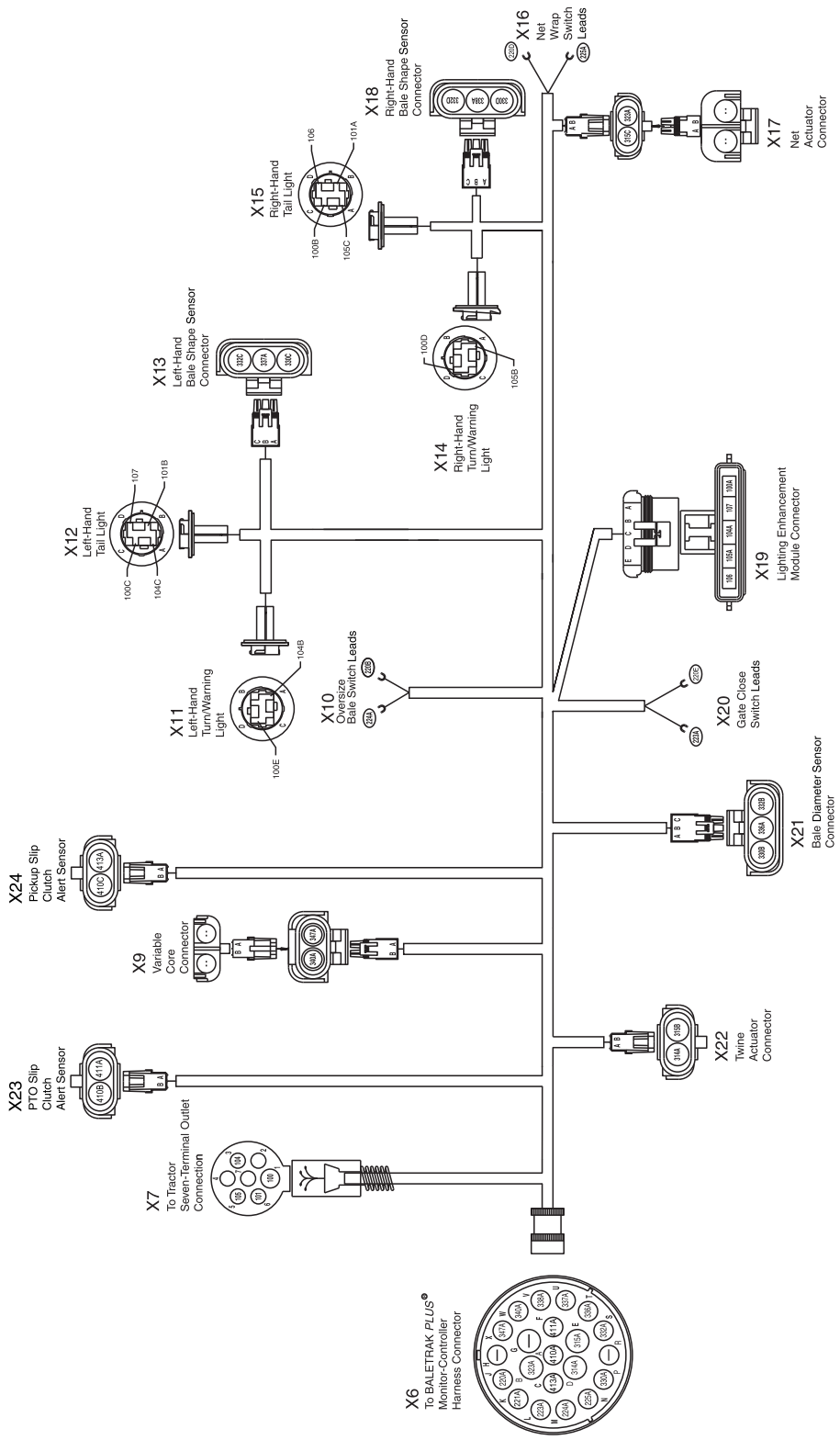

E84487—UN—12SEP17

X6 To BaleTrak™ Pro Monitor-Controller Harness Connector			
Terminal	**Circuit**	**Function**	**Wire Color**
A	410A	Ground	Black
B	323A	Net Actuator	Orange
C	413A	Pickup Slip Clutch Alert Sensor[a]	Orange
D	314A	Twine Actuator	Yellow
E	315A	Twine or Net Actuator	Green
F	411A	PTO Pickup Slip Clutch Alert Sensor[a]	Brown
G		Open	
H		Open	
J	220A	Ground	Black
K	221A	Left-hand Gate Closed Switch	Brown
L	223A	Right-hand Gate Closed Switch	Orange
M	224A	Oversize Bale Switch	Yellow
N	225A	Net Switch	Green
P	330A	Sensor Ground	Black
R		Open	
S	332A	Bale Diameter Sensor	Red
T	336A	Bale Diameter Sensor	Blue
U	337A	Left Bale Shape Sensor	Purple
V	338A	Right Bale Shape Sensor	Gray
W	340A	Ground	Black
X	347A	Power	Purple

[a]*Not used on 450M and 550M with a Regular pickup.*

X7 To Tractor Seven-Terminal Outlet Connector			
Terminal	**Circuit**	**Function**	**Wire Color**
1	100	Ground	Black
2		Open	
3	104	Left-hand Turn or Warning Light	Yellow
4		Open	
5	105	Right-hand Turn or Warning Light	Green
6	101	Tail Lights	Brown
7		Open	

X9 Variable Core Connector			
Terminal	**Circuit**	**Function**	**Wire Color**
A	347A	Power	Purple
B	340A	Ground	Black

X10 Oversize Bale Switch Leads			
Terminal	**Circuit**	**Function**	**Wire Color**
No Common	224A	Power	Yellow
No Common	220B	Ground	Black

X11 Left-Hand Turn or Warning Light Connector			
Terminal	**Circuit**	**Function**	**Wire Color**
A	104B	Power	Yellow
B		Open	
C		Open	
D	100E	Ground	Black

X12 Left-Hand Tail Light Connector			
Terminal	**Circuit**	**Function**	**Wire Color**
A	104C	Left-hand Turn or Warning Light	Yellow
B	101B	Left-hand Tail Lamp	Brown
C	100C	Ground	Black
D	107	Left-hand Flasher	Orange

X13 Left-Hand Bale Shape Sensor Connector			
Terminal	**Circuit**	**Function**	**Wire Color**
A	330C	Ground	Black
B	337A	Left Bale Shape	Purple
C	332C	Left Bale Shape	Red

X14 Right-Hand Turn or Warning Light Connector			
Terminal	**Circuit**	**Function**	**Wire Color**
A	105B	Power	Green
B		Open	
C		Open	
D	100D	Ground	Black

X15 Right-Hand Tail Light Connector			
Terminal	**Circuit**	**Function**	**Wire Color**
A	105C	Right-hand Turn or Warning Light	Green
B	101A	Right-hand Tail Lamp	Brown
C	100B	Ground	Black

X15 Right-Hand Tail Light Connector			
Terminal	**Circuit**	**Function**	**Wire Color**
D	106	Right-hand Flasher	Violet

X16 Net Wrap Switch Leads			
Terminal	**Circuit**	**Function**	**Wire Color**
No Common	220D	Ground	Black
No Common	225A	Power	Green

X17 Net Actuator Connector			
Terminal	**Circuit**	**Function**	**Wire Color**
A	315C	Net Actuator	Green
B	323A	Net Actuator	Orange

X18 Right-Hand Bale Shape Sensor Connector			
Terminal	**Circuit**	**Function**	**Wire Color**
A	330D	Ground	Black
B	338A	Right Bale Shape	Gray
C	332D	Right Bale Shape	Red

X19 Lighting Enhancement Module Connector			
Terminal	**Circuit**	**Function**	**Wire Color**
A	100A	Ground	Black
B	107	Left-hand Flasher	Orange
C	104A	Left-hand Turn or Warning Light	Yellow
D	105A	Right-hand Turn or Warning Light	Green
E	106	Right-hand Flasher	Violet

X20 Right-Hand Gate Closed Switch Leads			
Terminal	**Circuit**	**Function**	**Wire Color**
No Common	220E	Ground	Black
No Common	223A	Power	Orange

X21 Bale Diameter Sensor Connector			
Terminal	**Circuit**	**Function**	**Wire Color**
A	330B	Ground	Black
B	336A	Bale Diameter	Blue
C	332B	Bale Diameter	Red

X22 Twine Actuator Connector			
Terminal	**Circuit**	**Function**	**Wire Color**
A	314A	Twine Actuator	Yellow
B	315B	Twine Actuator	Green

X23 PTO Speed Sensor			
Terminal	**Circuit**	**Function**	**Wire Color**
A	411A	PTO Slip Clutch Alert[a]	Brown
B	410B	Ground	Black

[a]Not used on 450M and 550M with a Regular pickup.

X24 Pickup Speed Sensor			
Terminal	**Circuit**	**Function**	**Wire Color**
A	413A	Pickup Slip Clutch Alert[a]	Orange
B	410C	Ground	Black

[a]Not used on 450M and 550M with a Regular pickup.

SF04007,0000E7F-19-12SEP17

Wire Harness Diagram—HC2 Feed System

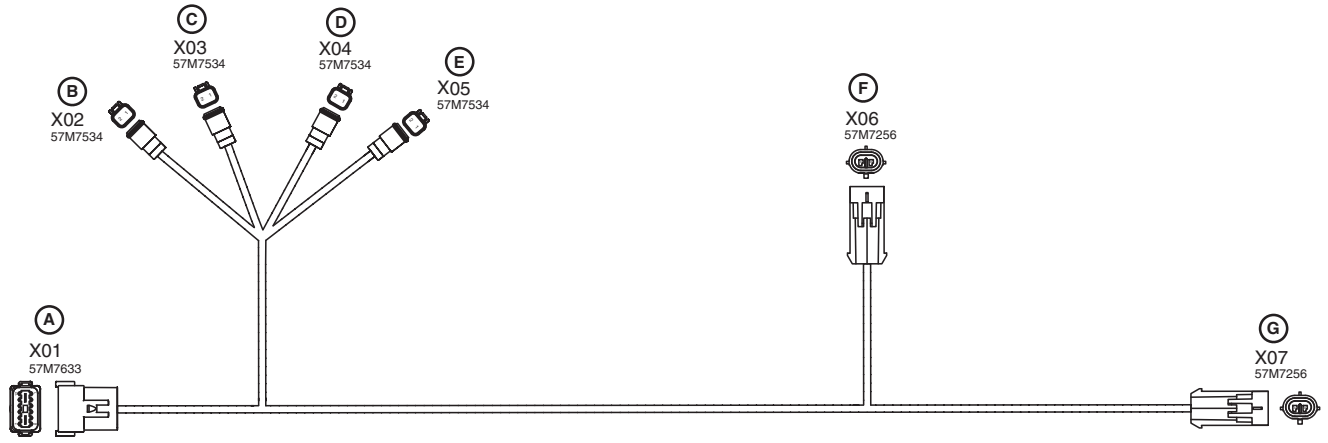

E83499—UN—14JUN17

A—Precutter Connector (X01)
B—Pickup Solenoid (X02)
C—Knives Engage Solenoid (X03)
D—Drop Floor Solenoid A (X04)
E—Drop Floor Solenoid B (X05)
F—Knife Switch (X06)
G—Drop Floor Switch (X07)

X01 Precutter Connector			
Terminal	**Circuit**	**Function**	**Wire Color**
1	0513	Pickup Valve Supply	Orange
2	0514	Knife Valve Supply	Yellow
3	0515	Drop Floor Valve Supply	Green
4	0510	Valve Ground	Black
5	0516	Knife Switch Signal	Blue
6	0517	Drop Floor Switch Signal	Violet
7	0220	Switch Ground	Black

X02 Pickup Solenoid			
Terminal	**Circuit**	**Function**	**Wire Color**
1	0513	Pickup Valve Supply	Orange
2	0510	Valve Ground	Black

X03 Knives Engage Solenoid			
Terminal	**Circuit**	**Function**	**Wire Color**
1	0514	Knife Valve Supply	Yellow
2	0510	Valve Ground	Black

X04 Drop Floor Solenoid A			
Terminal	**Circuit**	**Function**	**Wire Color**
1	0515	Drop Floor Valve Supply	Green
2	0510	Valve Ground	Black

X05 Drop Floor Solenoid B			
Terminal	**Circuit**	**Function**	**Wire Color**
1	0515	Drop Floor Valve Supply	Green
2	?0510	Valve Ground	Black

X06 Knife Switch			
Terminal	**Circuit**	**Function**	**Wire Color**
A	0516	Knife Switch Signal	Blue
B	?0220	Switch Ground	Black

X07 Drop Floor Switch			
Terminal	**Circuit**	**Function**	**Wire Color**
A	0517	Drop Floor Switch Signal	Violet
B	0220	Switch Ground	Black

SF04007,0000F6C-19-22SEP17

BaleTrak™ Pro Component Locations

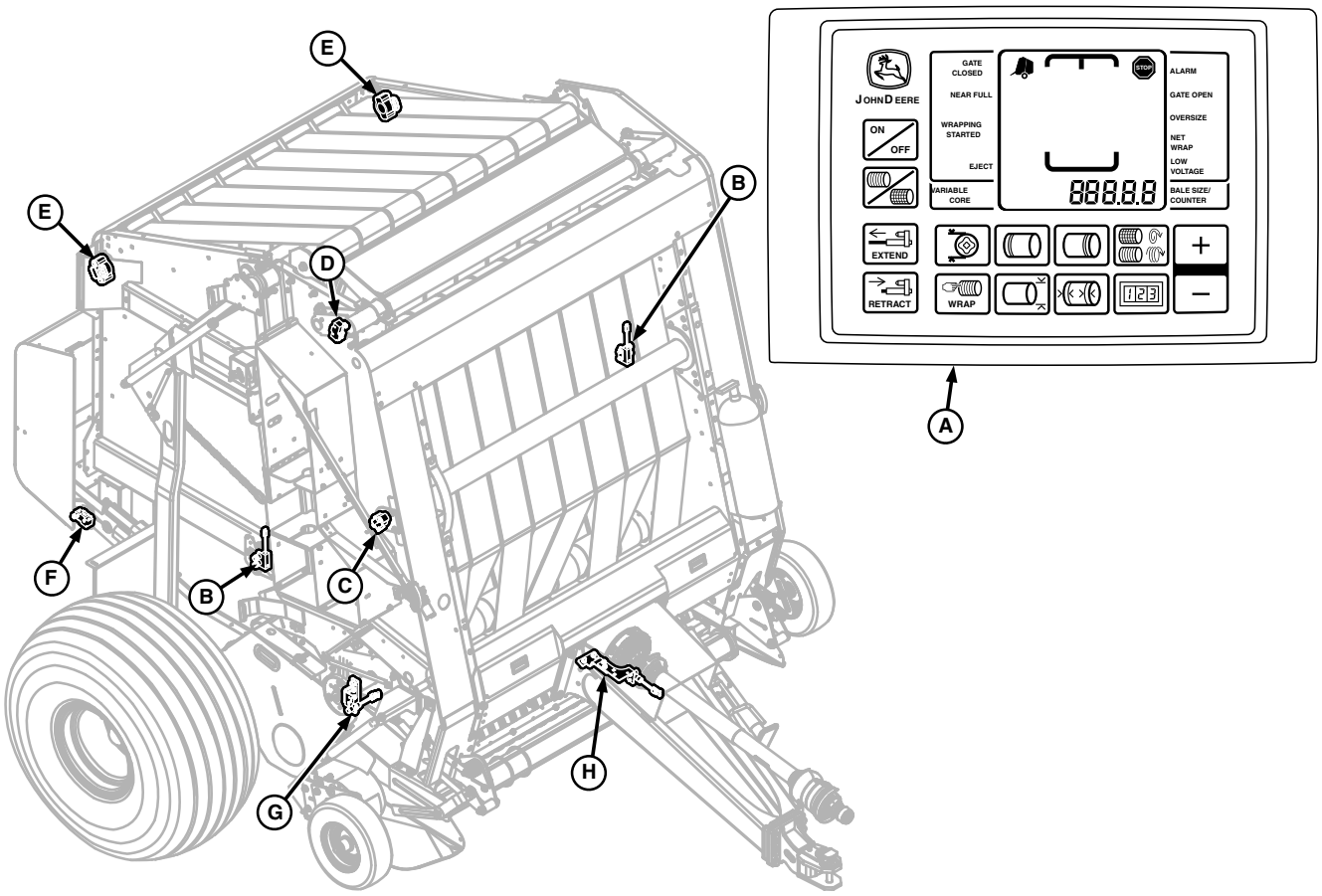

E69510—UN—26MAR13

A—Monitor-Controller (located on tractor)
B—Gate Latch Switches
C—Bale Diameter Sensor
D—Oversize Bale Switch
E—Bale Shape Sensors
F—Net Wrap Switch (if equipped)
G—Pickup Slip Clutch Alert Sensor
H—PTO Slip Clutch Alert Sensor

PP98408,000109C-19-25MAR13

Wire Diagram—BaleTrak™ Pro Monitor-Controller Control System

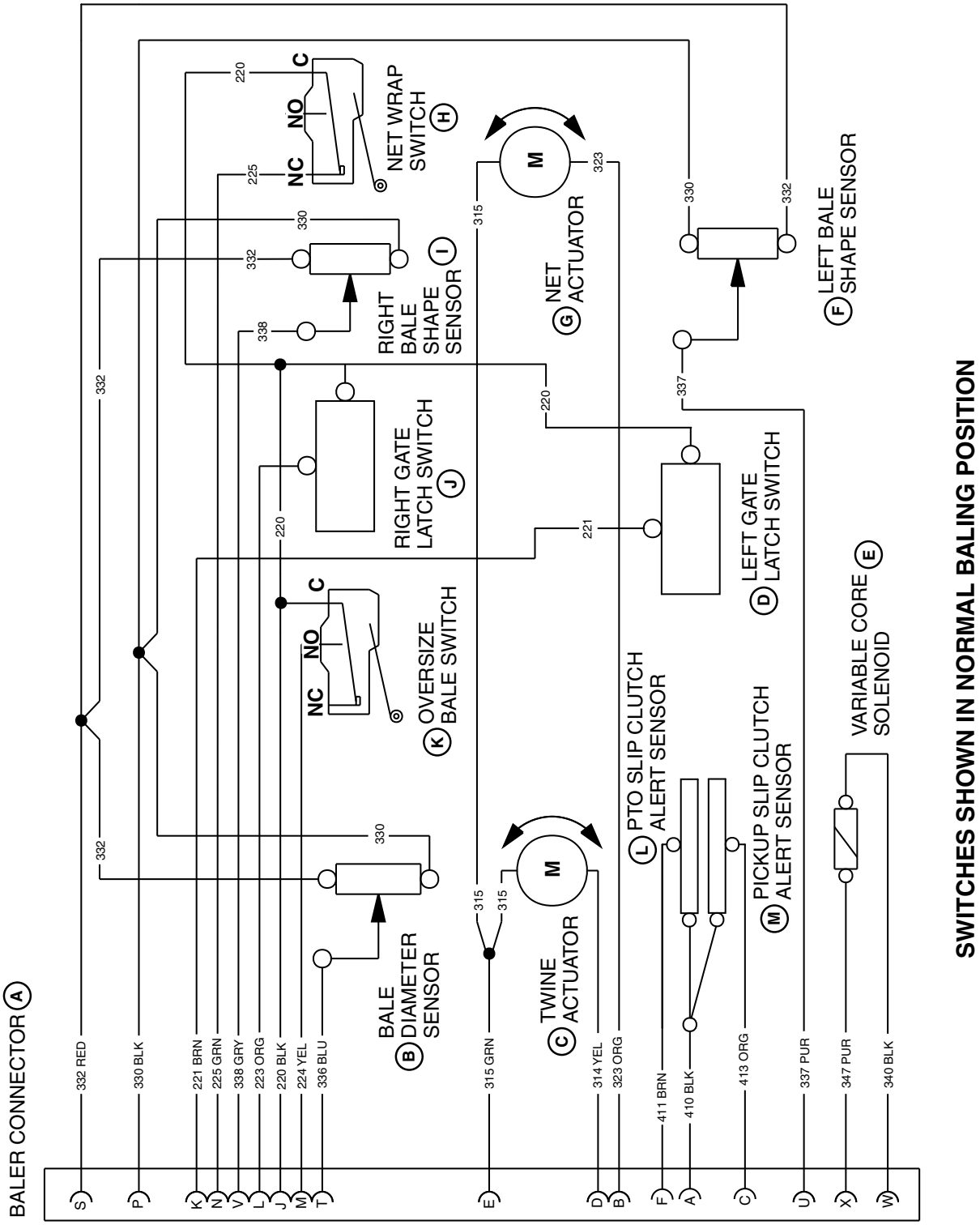

E57242—UN—29JUN09

A—Baler Connector
B—Bale Diameter Sensor
C—Twine Actuator
D—Left Gate Latch Switch
E—Variable Core Solenoid
F—Left Bale Shape Sensor
G—Net Actuator
H—Net Wrap Switch

I—Right Bale Shape Sensor
J—Right Gate Latch Switch
K—Oversize Bale Switch
L—PTO Slip Clutch Alert Sensor
M—Pickup Slip Clutch Alert Sensor

PP98408,000109D-19-11FEB13

Wire Harness Diagram—BaleTrak™ Pro Monitor-Controller

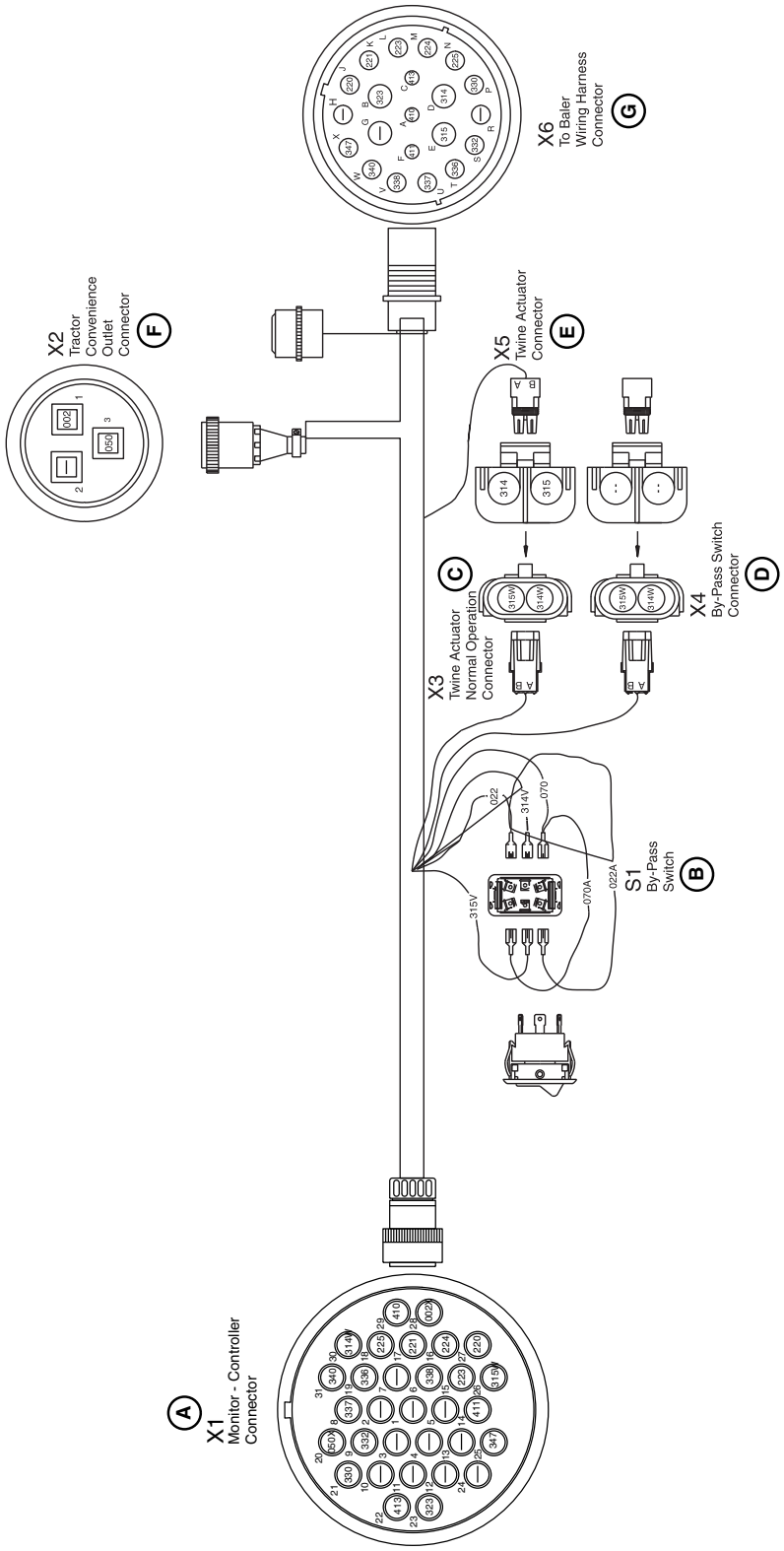

E57278—UN—02JUN09

A—Monitor-Controller Connector (X1)
B—By-Pass Switch (S1)
C—Twine Actuator Normal Operation Connector (X3)
D—By-Pass Switch Connector (X4)
E—Twine Actuator Connector (X5)
F—Tractor Convenience Outlet Connector (X2)
G—To Baler Wire Harness Connector (X6)

X1 BaleTrak™ Monitor-Controller Connector			
Terminal	**Circuit**	**Function**	**Wire Color**
1		Open	
2		Open	
3		Open	
4		Open	
5		Open	
6	338	Right Bale Shape Sensor	Gray
7		Open	
8	337	Left Bale Shape Sensor	Purple
9	332	Bale Shape Sensor Power	Red
10		Open	
11		Open	
12		Open	
13		Open	
14	411	PTO Speed	Brown
15	223	Right Gate Switch	Orange
16	224	Oversize Switch	Yellow
17	221	Left Gate Latch Switch	Brown
18	225	Net Switch	Green
19	336	Bale Size Sensor	Blue
20	050X	Ground	Black
21	330	Bale Shape Sensor Ground	Black
22	413	Pickup Speed	Orange
23	323	Net Actuator	Orange
24		Open	
25	347	Variable Core Valve	Purple
26	315W	Net and Twine Actuator	Green
27	220	Switch Ground	Black
28	002X	Power	Red
29	410	Speed Sensor Ground	Black
30	314W	Twine Actuator	Yellow
31	340	Variable Core Valve Ground	Black

X2 Tractor Convenience Outlet Connector			
Terminal	**Circuit**	**Function**	**Wire Color**
1	002	Power	Red
2		Open	
3	050	Ground	Black

X3 Twine Actuator Normal Operation Connector			
Terminal	**Circuit**	**Function**	**Wire Color**
A	314W	Twine Actuator	Yellow
B	315W	Twine or Net Actuator	Green

X4 Bypass Switch Connector			
Terminal	**Circuit**	**Function**	**Wire Color**
A	314V	Twine Actuator	Yellow
B	315V	Twine or Net Actuator	Green

X5 Twine Actuator Connector			
Terminal	**Circuit**	**Function**	**Wire Color**
A	314	Twine Actuator	Yellow
B	315	Twine or Net Actuator	Green

X6 Monitor Harness-to-Baler Harness Connector			
Terminal	**Circuit**	**Function**	**Wire Color**
A	410	Speed Sensor Ground	Black
B	323	Net Actuator	Orange
C	413	Pickup Speed	Orange
D	314	Twine Actuator	Yellow
E	315	Twine or Net Actuator	Green
F	411	PTO Speed	Brown
G		Open	
H		Open	
J	220	Ground	Black
K	221	Left Gate Latch Switch	Brown
L	223	Right Gate Latch Switch	Orange
M	224	Oversize Bale Switch	Yellow
N	225	Net Switch	Green
P	330	Ground	Black
R		Open	
S	332	Bale Shape Sensor	Red
T	336	Bale Diameter Sensor	Blue
U	337	Left Bale Shape Sensor	Purple
V	338	Right Bale Shape Sensor	Gray
W	340	Ground	Black
X	347	Variable Core	Purple

S1 Bypass Switch Connector			
Terminal	Circuit	Function	Wire Color
—	315V	Twine or Net Actuator	Green
—	070A	Ground	Black
—	022A	Power	Red
—	070	Ground	Black
—	314V	Twine Actuator	Yellow
—	022	Ground	Black

PP98408,000109E-19-11FEB13

Rotate Output Shaft By Hand

CAUTION: Never use any type of tool or wrench on shaft while tractor engine is running. Always remove tool from shaft as soon as you are finished using it.

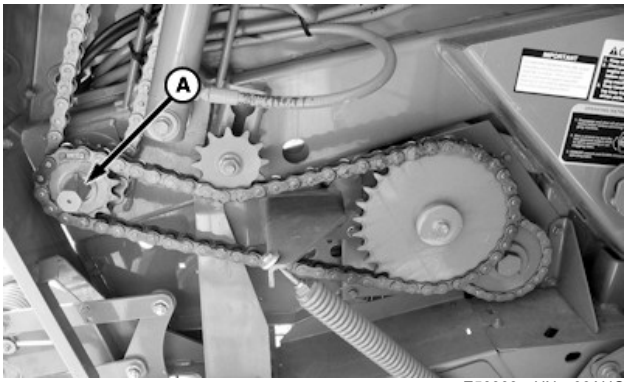

E58888—UN—06AUG10

A—Gear Case Output Shaft

If it is necessary to rotate the shaft by hand, an open-end wrench can be placed on the gear case output shaft (A).

PP98408,000109B-19-11FEB13

Check Pickup Tooth Rotational Play

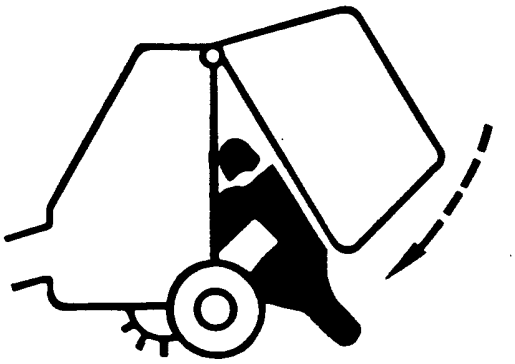

TS698—UN—21SEP89

CAUTION: To avoid injury or death caused by unexpected lowering of the gate, engage gate lock before working on, around, or under gate in raised position.

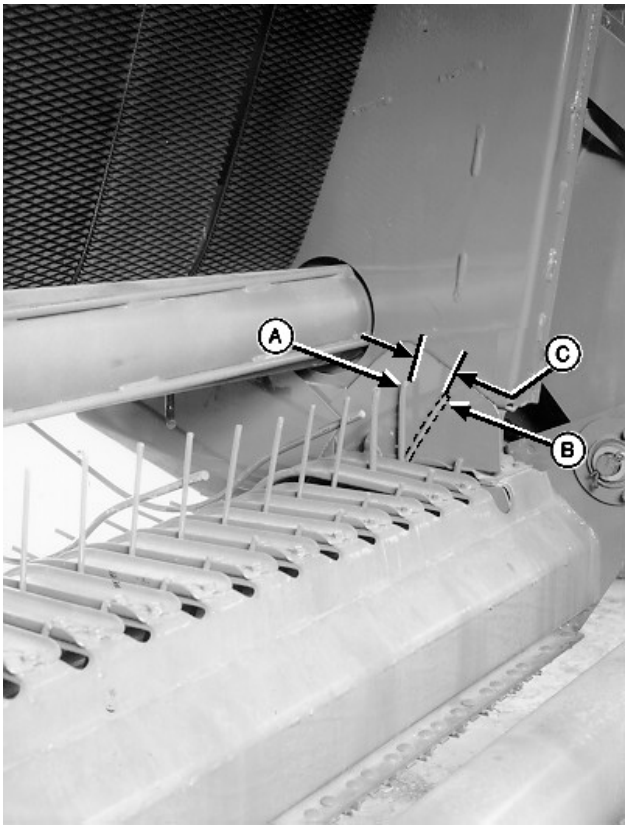

E40646—UN—15JUL96

A—Tooth Tip Position
B—Tooth Tip Position
C—Dimension

Excessive tooth rotational play in the feed opening area will reduce bale starting and feeding performance. Worn cams, spider bores, cam arm shafts, and cam bearings contribute to excessive tooth rotational play.

To check for rotational play:

1. Fully raise and lock gate.
2. Raise the pickup to transport position.

CAUTION: Never use any type of tool or wrench on shaft while tractor engine is running. Always remove tool from shaft as soon as you are finished using it.

3. Put a wrench on the gear case output shaft. Turn wrench clockwise until a row of pickup teeth are straight up.
4. Rotate the tooth bar forward, by hand, until the rotation has stopped. Mark the position of the outside tooth tip (A) on the end stripper panel.
5. Rotate the tooth bar rearward, by hand, until the rotation has stopped. Mark the position of the outside

tooth tip (B) on the end stripper panel. Measure and record the distance between marks.

NOTE: Perform on each end of 5' pickup since tooth bars are staggered.

6. Mark the row and repeat Steps 3—5 on the remaining rows of teeth.
7. If the average distance (C) between marks exceeds specifications, check wear in cams, spider bores, cam arm shafts, and cam bearings, and replace as needed.

Specification	
Marks on End Stripper Panel—Distance	51 mm (2 in.)

8. Return pickup to operating height.
9. Remove wrench from output shaft.

PP98408,00010D5-19-11FEB13

Replace Pickup Teeth

MegaWide™ Plus and Regular Pickups

CAUTION: Never use any type of tool or wrench on shafts while the tractor engine is operating. Always remove tools from the shaft as soon as procedure is finished.

NOTE: To service the pickup from the rear, open the gate fully and lock the gate.

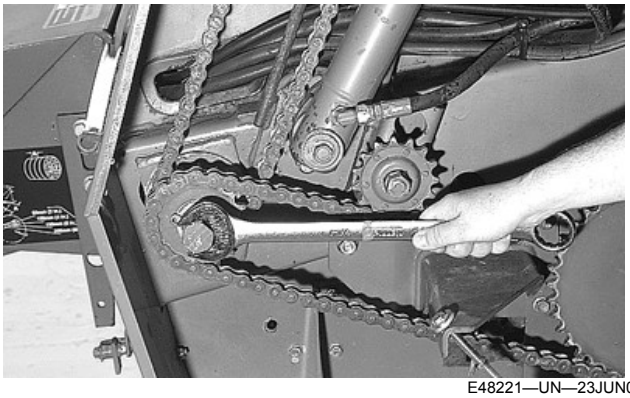

E48221—UN—23JUN00

1. Rotate the pickup reel by turning the gear case hex shaft using an open-end wrench as shown.

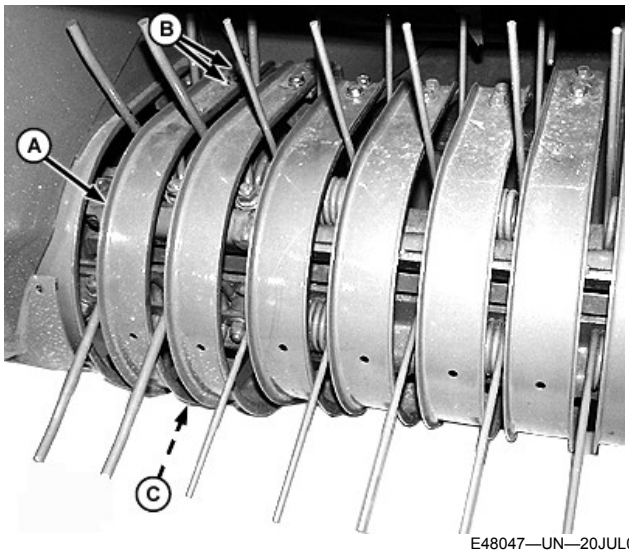

E48047—UN—20JUL00

Right-Hand End (MegaWide™ Plus Shown)

A—Strippers
B—Self-Tapping Cap Screw (2 used)
C—Nut (2 used)

2. Loosen self-tapping cap screws (B) and nuts (C) (each stripper).
3. Remove strippers (A) that are directly over the damaged teeth.

MegaWide™ Plus Pickup and MegaWide™ HC2 Pickup

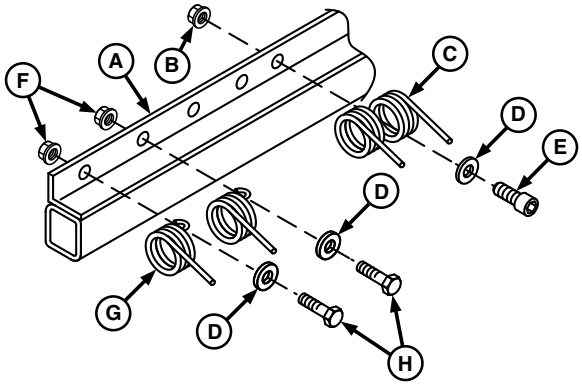

E60331—UN—02AUG11

460M MegaWide™ Plus

MegaWide is a trademark of Deere & Company

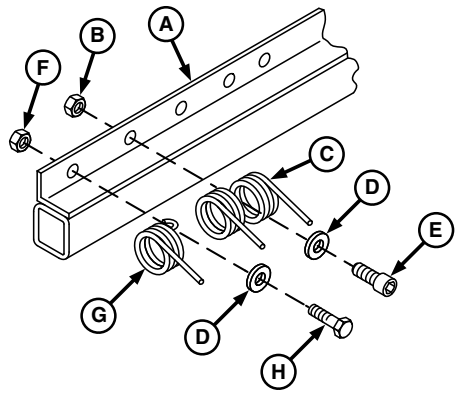

E84062—UN—04AUG17

560M MegaWide™ Plus

A—Tooth Bar
B—Flange Nut (as required)
C—Tooth or Tine (center)
D—Washer
E—Socket Head Cap Screw
F—Flange Nut (as required)
G—Tooth (outside)
H—Cap Screw

NOTE: Outside teeth (G) are larger than the center teeth (C). The outside teeth are single tine pieces and the center teeth are double tine pieces. Each type of tooth is mounted to the tooth bar differently. There are large outside teeth on each tooth bar (A) on both the left and right-hand ends of the pickup.

The right-hand end of the tooth bar (A) is shown. The number of large outside teeth on each end of the tooth bar (A) is:

- *460M MegaWide™ Plus—Two teeth*
- *560M MegaWide™ Plus— One tooth*

1. Remove teeth from the tooth bar as follows:
   a. **Outside teeth:** Remove flange nuts (F), cap screws (H), washers (D), and tooth or tines (G).
   b. **Center teeth:** Remove flange nut (B), socket-head cap screw (E), washer (D), and tooth or tines (C).

NOTE: Always replace hardware when replacing square wire teeth.

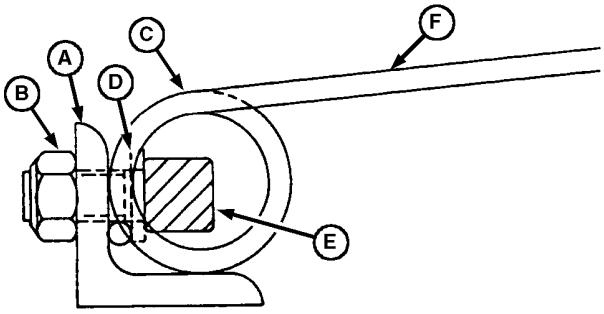

E48049—UN—26MAY00

Center Tooth or Tines

A—Tooth Bar
B—Flange Nut
C—Tooth Coil
D—Washer
E—Socket Head Cap Screw
F—Tooth or Tine

2. Install new teeth in reverse order of removal using the following special instructions:
   - The tooth coil (C) must rest against the inside angle of bar (A) with the tooth or tine (F) pointing away from the bar.
   - Cap screw (E) and washer (D) must be installed in the position shown to fasten tooth to bar.
   - Tighten flange nuts (B) to specification.

Specification

Flange Nut— Center Teeth—Torque	61 N·m (45 lb·ft)
Flange Nut—Outside Teeth —Torque	61 N·m (45 lb·ft)

NOTE: If mounting threads for the self-tapping cap screws become stripped, weld M8 nuts to the bottom side of the pickup frame strap.

3. Install previously removed strippers and cap screws. Tighten self-tapping cap screws to specification.

Specification

Stripper-to-Frame Self-Tapping Cap Screws—Torque	33 N·m (24 lb·ft)

Regular Pickup Only

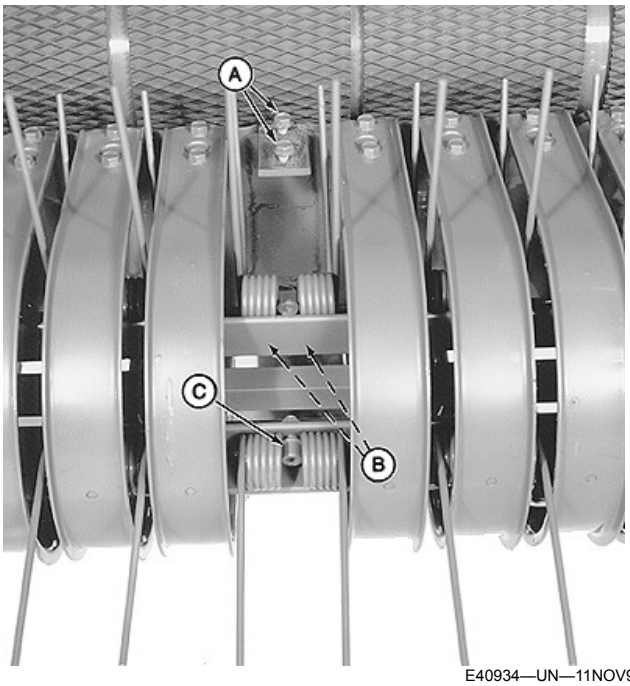

E40934—UN—11NOV96

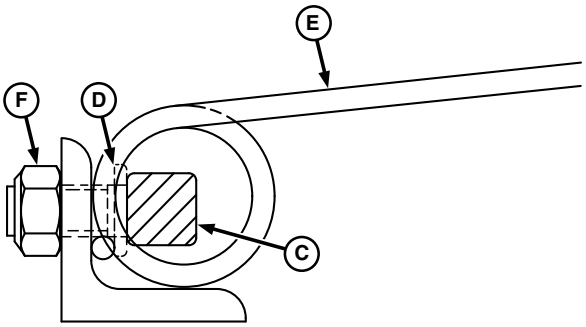

E84063—UN—04AUG17

A—Self-Tapping Cap Screw (2 used)
B—Carriage Bolt and Nut (2 each used)
C—Socket-Head Cap Screw
D—Washer
E—Spring Tooth or Tine
F—Flange Nut

1. To remove the stripper directly over broken or bent teeth, loosen the two screws (A) and two carriage bolts and nuts (B).
2. Remove flange nut (F), socket-head cap screw (C), washer (D), and spring tooth or tine (E).
3. Install new teeth as shown in reverse order of removal using the following special instructions:
   - The tooth coil must rest against the inside angle of the bar with the tooth or tine (E) pointing away from the bar.
   - Washer (D) must be installed in the position shown to fasten the tooth to the bar.
   - Tighten flange nut (F) to specifications.

Specification

Flange Nut (F)—Torque. . . . . 47 N·m (35 lb·ft)

NOTE: If mounting threads for the self-tapping cap screws become stripped, weld M8 nuts to bottom side of the pickup frame strap.

4. Install previously removed strippers and cap screws. Tighten self-tapping cap screws to specification.

Specification

Stripper-to-Frame Self-Tapping
Cap Screws—Torque. . . . . 33 N·m (24 lb·ft)

DP99999,0000DCD-19-27NOV17

Sharpen Knives (If Equipped)

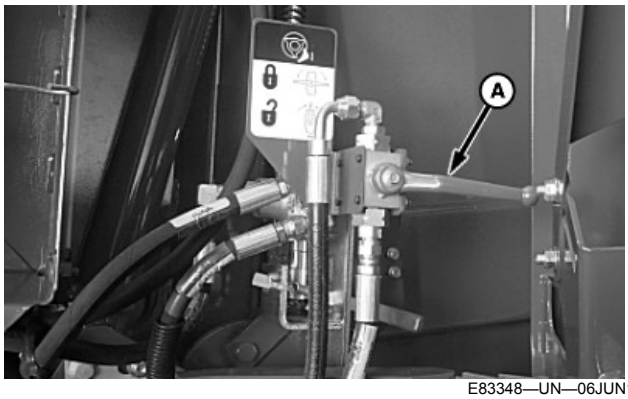

E83348—UN—06JUN17

Knife Cylinder Lockout Valve

E77215—UN—30SEP14

A—Lockout Valve Lever

CAUTION: Precutter knives are extremely sharp and can move without warning. To avoid serious injury, shut off all power and engage the knife cylinder lockout valve lever (A) in the locked position before servicing the knives or unclogging the baler. Prevent personal injury by wearing suitable gloves when handling knives.

NOTE: Always keep precutter knives sharp. Sharp knives save power and provide higher capacity.

Sharpen knives every 10 hours of operation. Depending on crop conditions, a more frequent sharpening schedule is necessary.

1. Remove knife from the machine. (See Remove and Install Precutter Knives in Preparing the Baler section.)

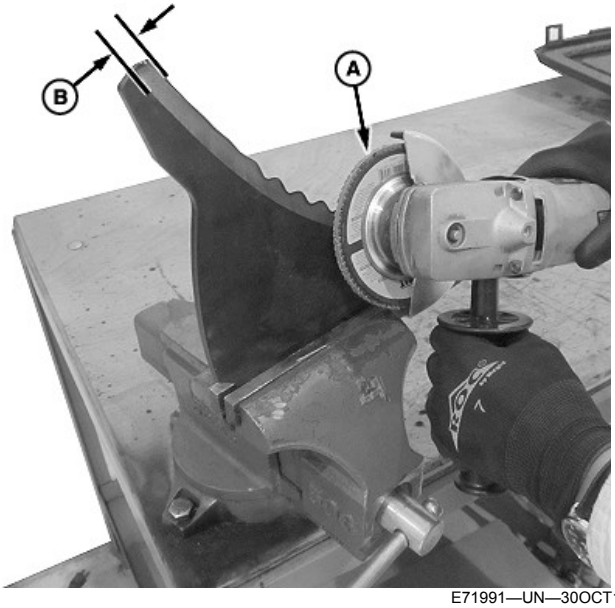

E71991—UN—30OCT13

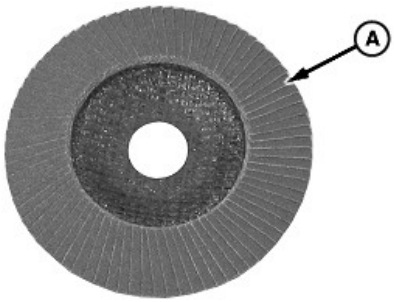

E71992—UN—30OCT13

A—Flap Wheel
B—Grinding Edge

2. Clamp knife in a vise as shown.

CAUTION: Knives are sharp. Prevent personal injury by wearing suitable gloves when handling knives.

Protect eyes. Flying metal debris and sparks can cause serious injury. Always wear appropriate eye protection when sharpening knives.

IMPORTANT: Avoid overheating metal during sharpening. To avoid overheating the cutting edge, keep the flap wheel moving along the edge of the knife and remove small amounts of material in each pass. If the steel is blued, it decreases the integrity of the blade leaving it brittle and a cutting edge that will not last.

3. Sharpen knives using a flap wheel grinding disk (A) at a 12° ±2° angle.
4. Maintain a maximum grinding edge (B) of 10 mm (0.5 in).
5. To reinstall the knife (see Remove and Install Precutter Knives in Preparing the Baler section).

DP99999,0000E19-19-27NOV17

Adjust Initial Length of Hydraulic Lift Cylinder (MegaWide™ Plus and Regular Pickup Only)

IMPORTANT: If the hydraulic pickup lift cylinder has been removed, the initial length must be adjusted before installing the cylinder.

1. Extend the cylinder fully.
2. Install the cylinder stop, lock nut, washer (MegaWide™ Plus pickup only), and end block onto the cylinder rod.
3. Turn the cylinder rod into the end block until the distance (A), from the center of the hole in the base end of the cylinder to the center of the hole in the end block, is within specifications.

Specification	
Initial Cylinder Length—Distance	606 mm (23-7/8 in)

4. Install the cylinder on the baler.

MegaWide is a trademark of Deere & Company

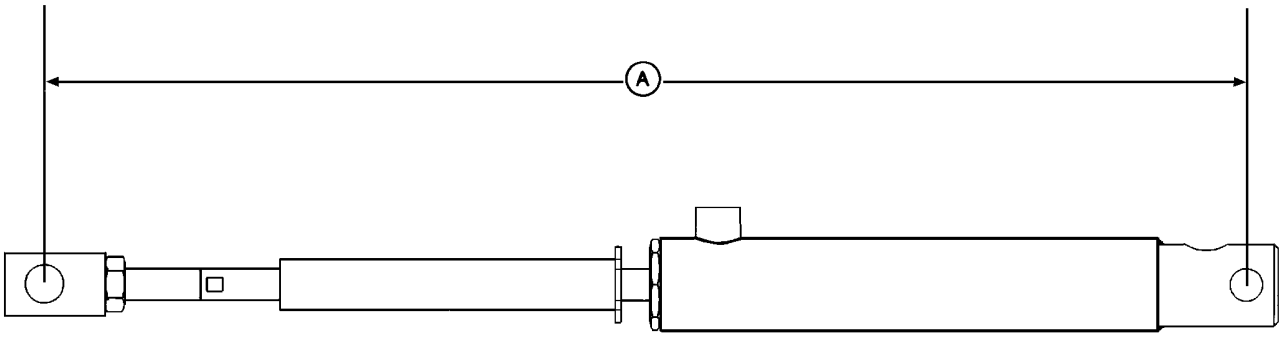

E39758—UN—20FEB96

A—Distance

DP99999,0000E18-19-07SEP17

Adjust Pickup Float Springs (Regular Pickup—560M)

NOTE: If equipped with hydraulic pickup lift, remove cap screw from the base end of cylinder (left-hand side) to gain access for spring adjustment.

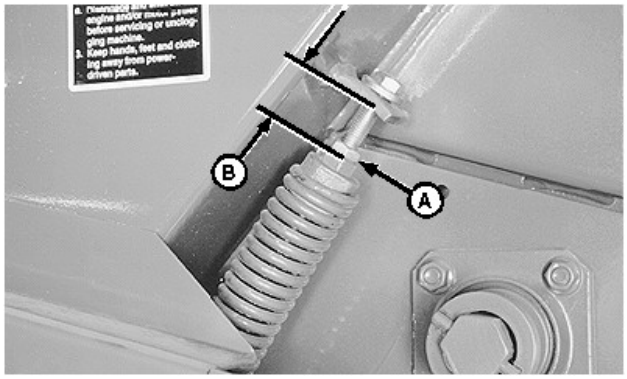

E39271—UN—19JUN96

Right-Hand Side

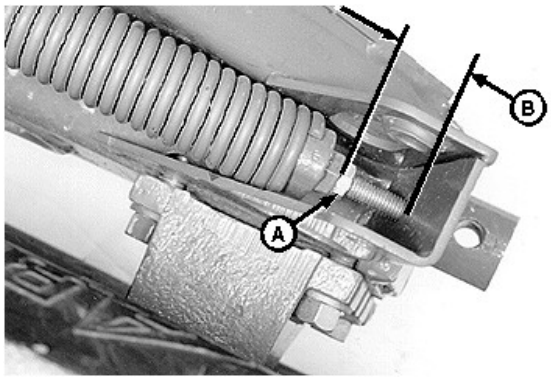

E39270—UN—19JUN96

Left-Hand Side

A—Lock Nut
B—Dimension

Dimension (B) is an initial float spring setting for pickup tooth-to-ground clearance of 25—50 mm (1—2 in) with wheel spindles in the normal position. (See WHEEL SPINDLE POSITIONS in Preparing the Baler section.)

More spring force is needed if:

- Operating at pickup tooth-to-ground clearance above 50 mm (2 in) with wheel spindles in the normal position.
- The baler has been lowered at the wheel spindles to improve feeding. (See BALE SHORT, DRY, SLICK CROPS in Operating the Baler section.)

Less spring force is needed if:

- The pickup does not lower to desired operating height.
- The pickup bounces too much and leaves crop.
- The baler has been raised at the wheel spindles to improve feeding. (See BALE CORNSTALKS in Operating the Baler section.)

1. Loosen lock nut (A).

IMPORTANT: Any dimension less than 60 mm (2.4 in) at the right-hand spring stretches or weakens the spring.

2. Tighten screw into the spring plug until dimension (B), between the spring plug and the spring anchor, is attained.

Float Spring Setting (Regular Pickup Without Gauge Wheels)	
	Dimension (B)
Right-Hand Side	140 mm (5.5 in)
Left-Hand Side	140 mm (5.5 in)

Float Spring Setting (Regular Pickup With Gauge Wheels)	
	Dimension (B)
Right-Hand Side	60 mm (2.4 in)
Left-Hand Side	10 mm (0.4 in)

3. Tighten lock nut (A).

DP99999,0000D2F-19-07SEP17

Adjust Pickup Float Springs (MegaWide™ Plus Pickup)

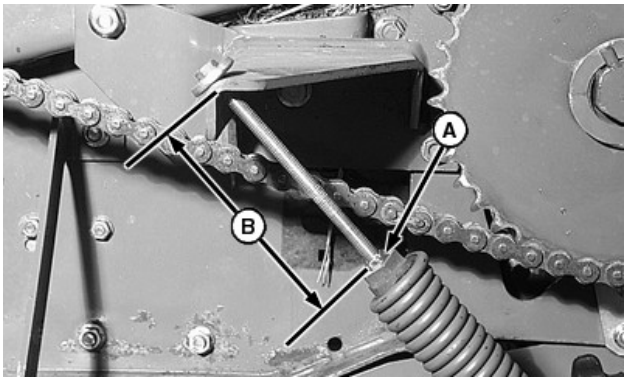

E48174—UN—19JUN00

Left-Hand Side

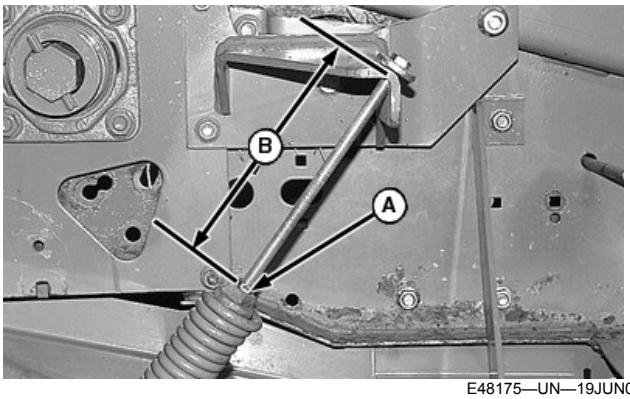

E48175—UN—19JUN00

Right-hand Side

A—Lock Nut
B—Float Spring Setting Dimension

Dimension (B) is an initial float spring setting for pickup tooth-to-ground clearance of 25—50 mm (1—2 in) with wheel spindles in the normal position. (See WHEEL SPINDLE POSITIONS in Preparing the Baler section.)

More spring force is needed if:

- Operating at pickup tooth-to-ground clearance above 50 mm (2 in) with spindles in the normal position.
- The baler has been lowered at the wheel spindles to improve feeding. (See BALE SHORT, DRY, SLICK CROPS in Operating the Baler section.)

Less spring force is needed if:

- The pickup does not lower to desired operating height.
- The pickup bounces too much and leaves crop.
- The baler has been raised at the wheel spindles to improve feeding. (See BALE CORNSTALKS in Operating the Baler section.)

1. Loosen lock nut (A).
2. Tighten screw into spring plug until dimension (B), between the spring plug casting and the anchor, is attained. Dimension (B) is intended for pickup tooth ground clearance of 25—50 mm (1—2 in) with wheel spindles in the normal position.

DIMENSION (B)	
460M (Both Sides)	75 mm (3 in)
560M (Both Sides)	55 mm (2 in)

3. Tighten lock nut (A).

DP99999,0000D31-19-28APR17

Adjust Pickup Float Springs (MegaWide™ HC2 Feed System—460M)

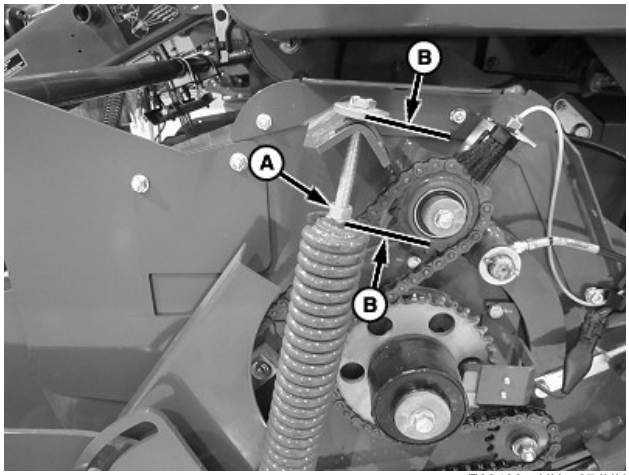

E83409—UN—07JUN17

Left-Hand Side

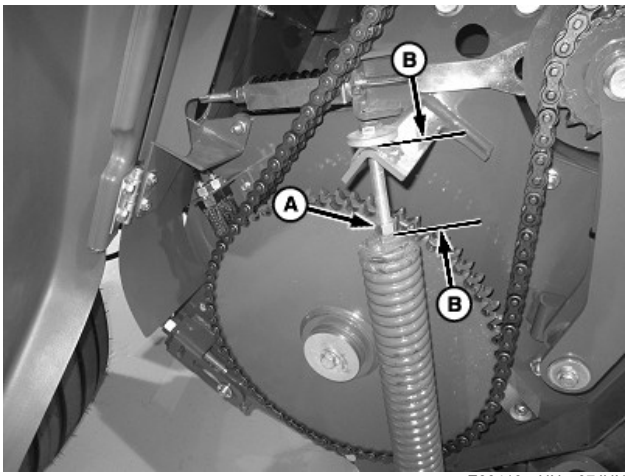

E83410—UN—07JUN17

Right-Hand Side

A—Lock Nut
B—Dimension

Dimension (B) is an initial float spring setting for pickup tooth-to-ground clearance of 25—50 mm (1—2 in) with wheel spindles in the normal position. (See Wheel Spindle Positions in Preparing the Baler section.)

More spring force is needed if:

- Operating at pickup tooth-to-ground clearance above 50 mm (2 in) with spindles in the normal position.

Less spring force is needed if:

- The pickup does not lower to desired operating height.
- The pickup bounces too much and leaves crop.

1. Loosen lock nut (A).
2. Tighten screw into spring plug until dimension (B), between spring plug casting and anchor, is attained. Dimension (B) is intended for pickup tooth ground clearance of 25—50 mm (1—2 in) with wheel spindles in normal position.

Float Spring Setting	
	Dimension (B)
460M (Both Sides)	75 mm (3 in)

3. Tighten lock nut (A).

DP99999,0000E1A-19-22SEP17

Adjust Initial Length of Pickup Drive Belt Idler Spring—Regular Pickup (560M)

IMPORTANT: If spring has been removed, the initial length of spring must be adjusted before adjusting the belt idler.

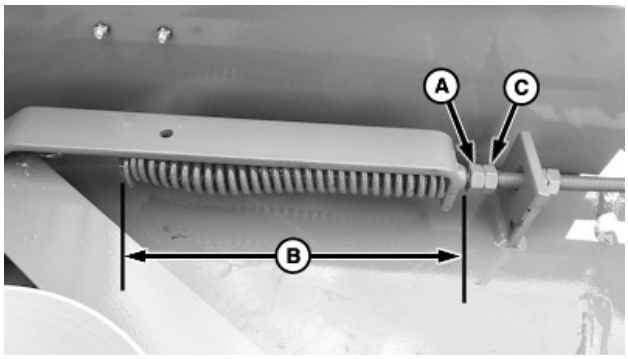

E70458—UN—17JUL13

A—Nut
B—Distance
C—Lock Nut

1. Adjust initial length of spring by obtaining distance (B) between far end of screw head and end of spacer.

   Adjust nut (A) until distance (B) is within specifications and tighten lock nut (C) against nut (A).

Specification

Idler Spring—Initial Length. . . . . 215 mm (8-1/2 in)

2. Install spring on baler.
3. Adjust pickup drive belt idler. (See Adjust Pickup Drive Belt Idler—Regular Pickup [560M] in this section.)

DP99999,0000D1F-19-25APR17

Adjust Pickup Drive Belt Idler—Regular Pickup (560M)

IMPORTANT: The belt tensioner is designed to protect pickup components; overtightening reduces protection. Check adjustment daily.

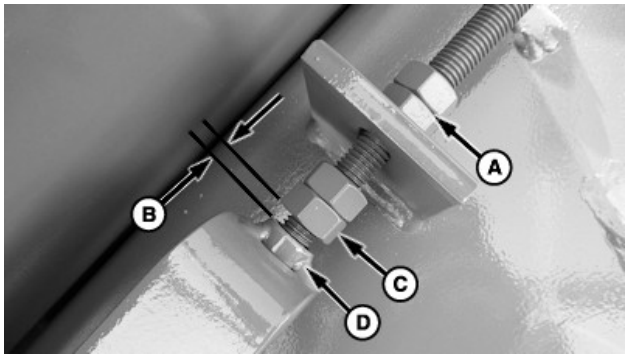

E70438—UN—12JUL13

A—Lock Nut (2 used)
B—Clearance, 4—6 mm (5/32—1/4 in)
C—Nut
D—Spacer

1. Before adjusting idler, perform the following:
   a. Start tractor engine and engage the PTO.
   b. Observe spacer (D) relative to nut (C).

- If total movement is more than 3 mm (1/8 in), inspect belt for a burn or thin spot and inspect the drive sheave groove for debris.
- Inspect belt and replace if necessary.

c. Shut off tractor engine and remove ignition key.

2. Adjust pickup idler as follows:

a. Loosen lock nuts (A).

b. Adjust rear lock nut (A) until clearance (B) between nut (C) and end of spacer (D) is within specifications.

Specification

Spacer-to-Nut—Clearance. . . . . 4—6 mm (5/32—1/4 in)

c. Tighten the front lock nut (A) against the rear lock nut.

DP99999,0000D20-19-30JUN17

Adjust Pickup Drive Chains (MegaWide™ Plus Pickup)

To ensure that all slack is removed from chains;

- Close gate and engage PTO a few seconds.
- Stop tractor engine and remove key.

1. Open side doors.

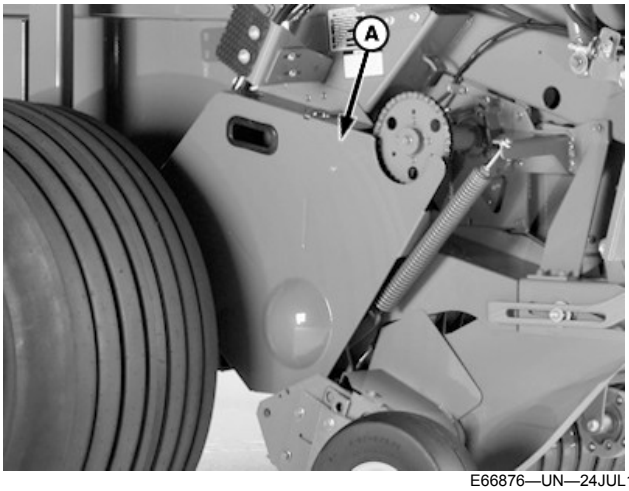

E66876—UN—24JUL12

A—Shield

2. **Right-Hand Side;**
   a. Remove shield (A).

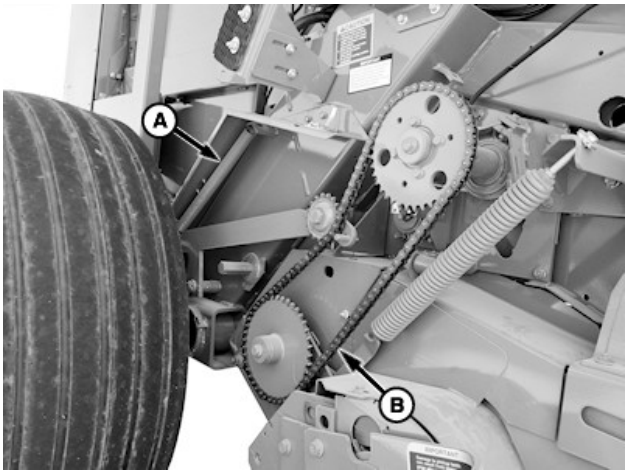

E66863—UN—24JUL12

A—Idler Spring
B—Chain

   b. Check distance between hooks on spring (A). If distance is less than specifications remove one link from chain (B).

Specification

Idler Spring Hook-to-Hook—Distance. . . . . 384 mm (15-1/8 in)

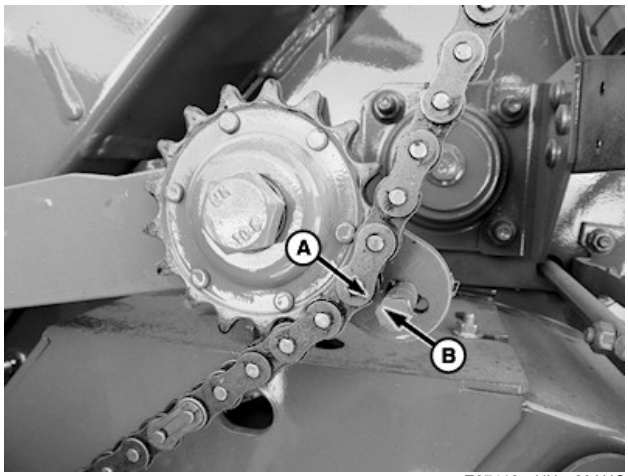

E67412—UN—28AUG12

A—Chain
B—Chain Retainer

   c. Check distance between the chain (A) and chain retainer (B). If distance is not within specifications, adjust chain retainer.

Specification

Chain-to-Chain Retainer—Distance. . . . . 3—6 mm (1/8—1/4 in)

   d. Install shield.

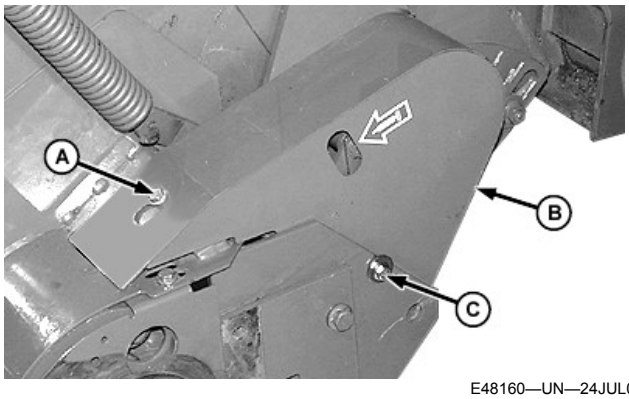

E48160—UN—24JUL00

A—Cap Screw
B—Shield
C—Cap Screw

3. **Left-Hand Side;**
   a. Loosen cap screws (A) and (C).
   b. Lift on the rear of shield (B) and slide toward the front of the machine to remove.

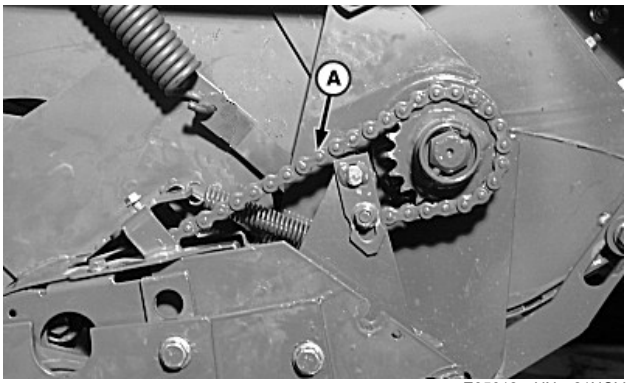

E85612—UN—21NOV17

A—Drive Chain

c. If the bottom of chain is contacting top of chain, remove one link from chain (A).

d. Install shield and tighten cap screws.

4. Close side doors.

DP99999,0000EA6-19-21NOV17

Adjust Pickup Drive Chains (MegaWide™ HC2 Feed System)

To ensure that all slack is removed from chains;

- Close gate and engage PTO a few seconds.
- Stop tractor engine and remove key.

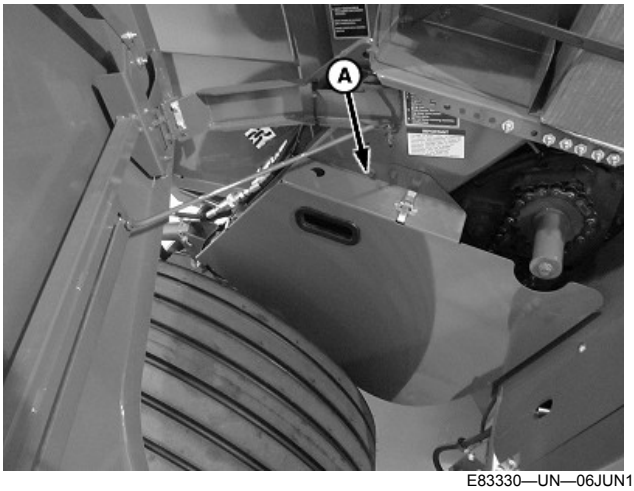

E83330—UN—06JUN17

A—Shield

1. Open side doors.
2. Right-Hand Side:
   a. Remove shield (A).

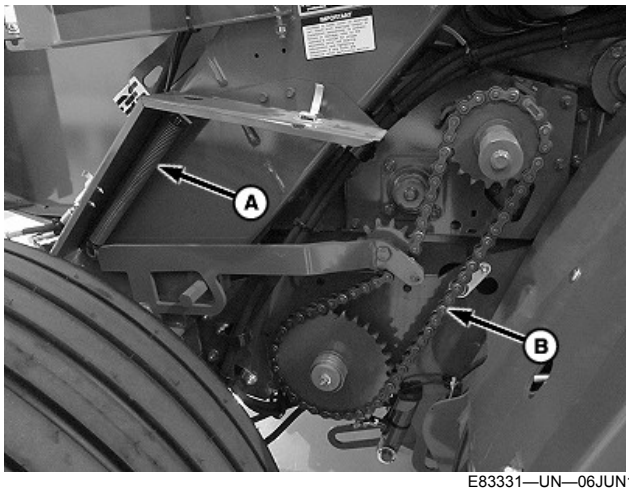

E83331—UN—06JUN17

A—Idler Spring
B—Chain

b. Check the distance between the hooks on spring (A). If the distance is less than specifications, remove one link from chain (B).

Specification

Idler Spring Hook-to-Hook—Distance. . . . . 384 mm (15-1/8 in)

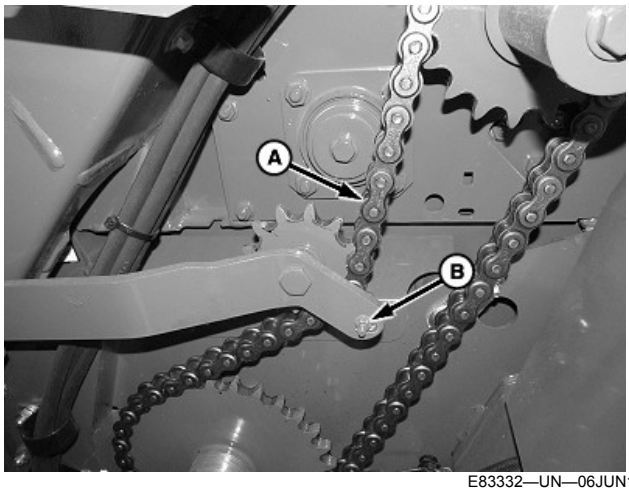

E83332—UN—06JUN17

A—Chain
B—Chain Retainer

c. Check distance between the chain (A) and the chain retainer (B). If distance is not within specifications, adjust chain retainer.

Specification

Chain-to-Chain Retainer—Distance. . . . . 3—6 mm (1/8—1/4 in)

d. Install shield.

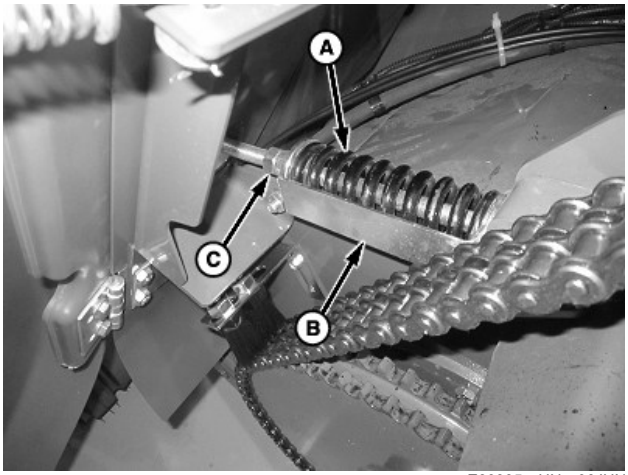

E83335—UN—06JUN17

A—Rotor Drive Idler Spring
B—Steel Gauge
C—Lock Nut (2 used)

e. Check the length of the idler spring (A). Adjust the spring to match the steel gauge (B) by tightening or loosening the lock nuts (C).

3. Left-Hand Side:

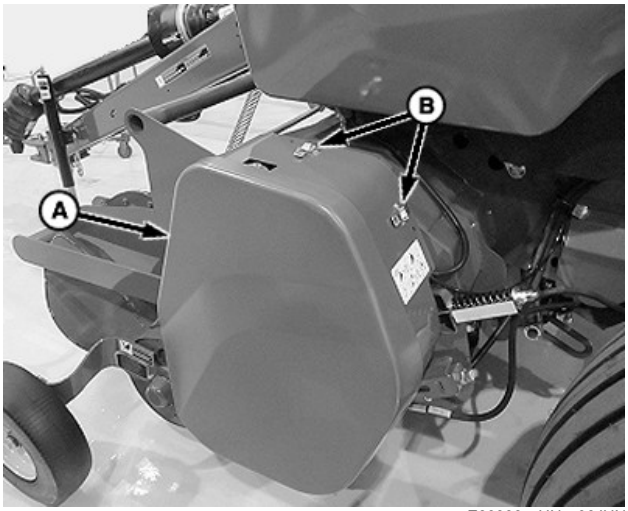

E83333—UN—06JUN17

A—Shield
B—Latch (2 used)

a. Unsnap the latches (B) and remove the shield (A).

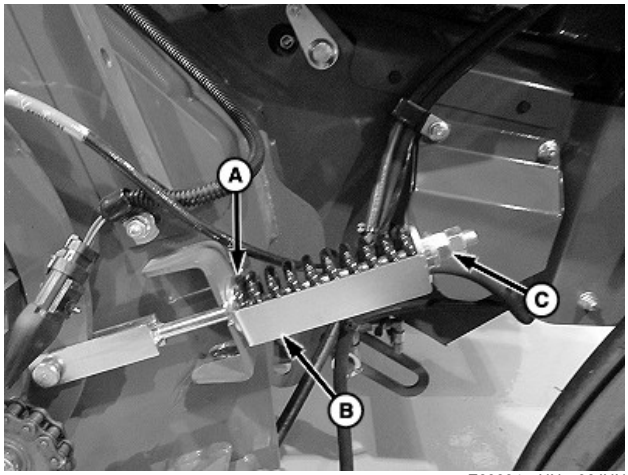

E83334—UN—06JUN17

A—Spring
B—Steel Gauge
C—Lock Nut (2 used)

b. Adjust the spring (A) length to match the steel gauge (B) by tightening or loosening the lock nuts (C).

4. Replace the shield.

SF04007,0000EF0-19-21NOV17

Adjust Lower Drive Roll Chain

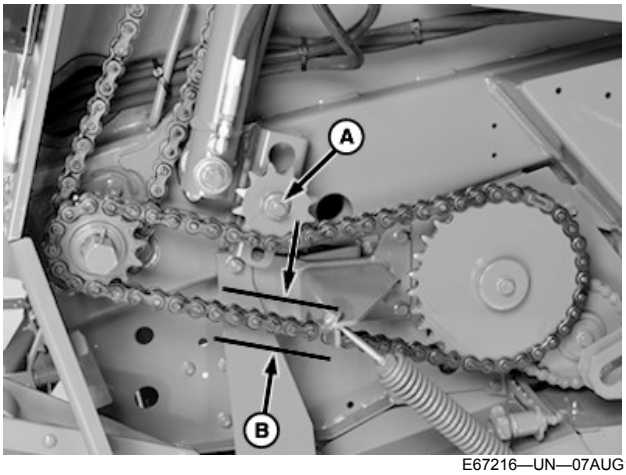

E67216—UN—07AUG12

460M and 560M Shown

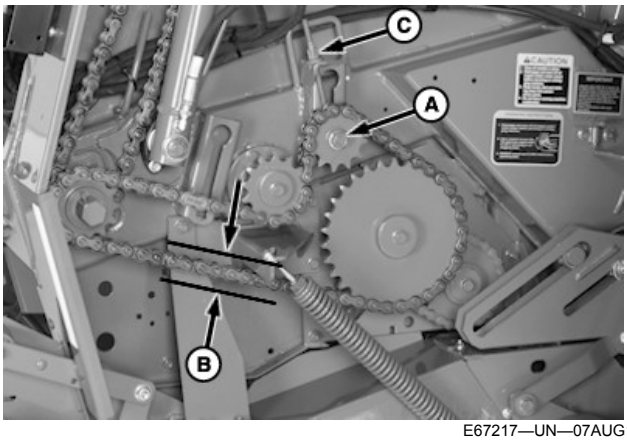

E67217—UN—07AUG12

460M and 560M (Powered Auger Scraper Models)

A—Idler Sprocket Nut
B—Dimension, 10—16 mm (3/8—5/8 in)
C—Eyebolt Lock Nut

To ensure that all slack is removed from chains:

- Close gate and engage PTO a few seconds.
- Stop tractor engine and remove key.

1. Open left-hand side door.
2. To adjust idler sprocket on 460M and 560M:
   - Loosen idler sprocket nut (A).
   - Adjust idler sprocket to meet total mid-span chain deflection (B) specifications.

Specification

Mid-Span Deflection—Distance. . . . . 10—16 mm (3/8—5/8 in)

NOTE: Do not install chain half (offset) links.

   - Remove two links when idler sprocket is within last 10 mm (3/8 in) of the end slot.
   - Tighten idler nut (A) to specification.

Specification

Idler Nut—Torque. . . . . 163 N·m (120 lb·ft)

3. To adjust idler sprocket on 460M and 560M balers equipped with powered auger scraper:
   - Loosen idler sprocket nut (A) and eyebolt lock nut (C).
   - Adjust idler sprocket to meet total mid-span chain deflection (B) specifications.

Specification

Mid-Span Deflection—Distance. . . . . 10—16 mm (3/8—5/8 in)

NOTE: Do not install chain half (offset) links.

   - Remove two links when idler sprocket is within 8 mm (5/16 in) of eyebolt support on the baler frame.
   - Tighten first eyebolt nut to meet mid-span deflection.
   - Tighten idler nut (A) to specification and tighten eyebolt lock nut.

Specification

Idler Nut—Torque. . . . . 163 N·m (120 lb·ft)

DP99999,0000D21-19-27SEP17

Adjust Upper Drive Roll Chain

IMPORTANT: Let spring length shorten to 235—250 mm (9-1/4—9-27/32 in.) before removing two links to avoid chain rubbing tension arm tube.

NOTE: Idler sprocket arm contacts a stop when spring length is approximately 235 mm (9-1/4 in.) or chain strands are approximately 15 mm (0.60 in.) apart.

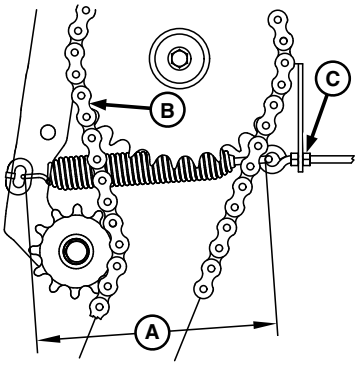

E58861—UN—04AUG10

A—Dimension
B—Chain
C—Nut

Open left-hand side door.

If spring dimension (A) from hook to hook is not within specifications perform the following:

Specification

Upper Drive Roll Chain
Spring—Distance. . . . . 235—305 mm (9-1/4—12 in.)

1. Loosen nut (C) to release chain tension.
2. Separate chain (B) at connecting (master) link.
   - If dimension (A) is less than 235 mm (9-1/4 in.), remove two chain links.

NOTE: Do not install chain half (offset) links.

3. Assemble connecting (master) link in chain (B).
4. Hold eye bolt from turning and tighten nut (C) against angle.
5. Verify that front strand of chain is not rubbing tension arm tube.

6. Close left-hand side door.

PP98408,00010A6-19-11FEB13

Adjust Upper Drive Roll Chain Guides

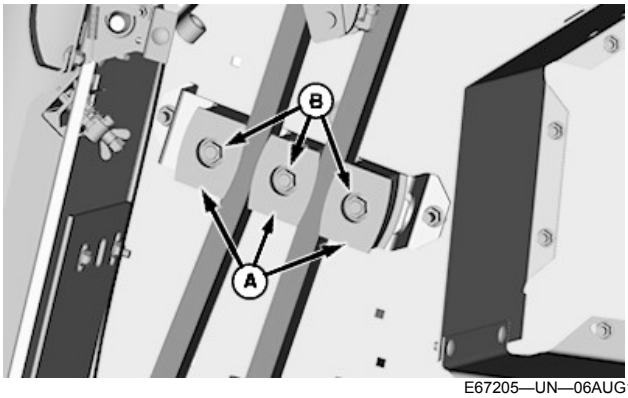

E67205—UN—06AUG12

A—Guides
B—Guide Nuts

When worn grooves in guides (A) exceed specifications, rotate guides or replace.

Adjust Guides

1. Raise gate, lock gate lock valve, shut off tractor and remove key.
2. Loosen guide nuts (B) and move rear guide to rear of slot, move center guide to front of slot, and verify that round bolt heads are seated and finger tight.
3. Using a 35 mm (1-3/8 in.) wrench, turn gearbox output shaft clockwise so rear chain strand is tight and straight.
4. Move center guide rearward until it contacts rear chain strand and tighten nut.
5. Move rear guide forward until it contacts rear chain and tighten nut.
6. Move front guide rearward until front chain strand contacts center guide and tighten nut.
7. Keep top of guides even with top edge of guide bracket while tightening guide nuts.
8. Remove wrench from gearbox output shaft, lower gate, and close door.

PP98408,00010A7-19-11FEB13

Rotate or Replace Upper Drive Roll Chain Idler Bushing

Rotate Bushing

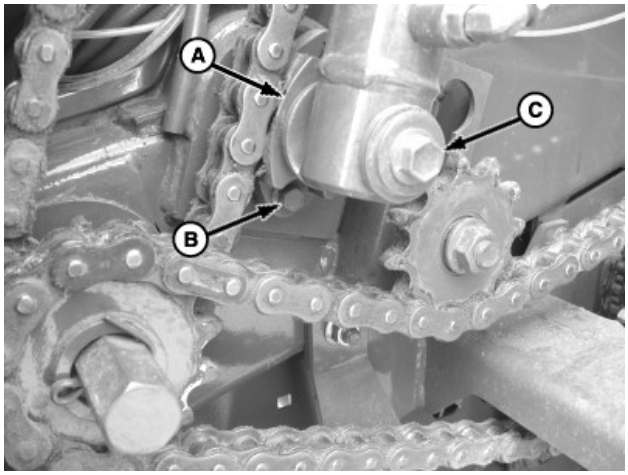

E54758—UN—07JUL06

A—Bushing
B—Cap Screw
C—Cap Screw and Washer

1. When worn grooves in bushing (A) exceed specifications, remove cap screw (B).

Specification

Bushing—Worn Grooves. . . . . 6—7 mm (1/4—5/16 in.)

2. Rotate bushing (A) and install cap screw (B).

Replace Bushing

1. Remove cap screw and washer (C).
2. Remove tension cylinder and washer from pin.
3. Remove cap screw (B) and bushing (A).
4. Install new bushing. Fasten with cap screw (B).
5. Install washer and cylinder onto pin.
6. Install cap screw and washer (C). Tighten to specifications.

Specification

Tension Cylinder-to-Force—Torque. . . . . 140 N·m (105 lb.-ft.)

PP98408,00010B9-19-11FEB13

Adjust Third Roll Drive Chain (MegaWide™ HC2 Pickup Only)

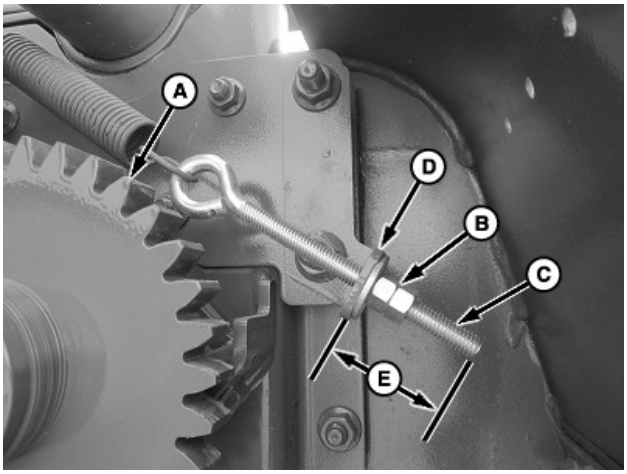

E84630—UN—22SEP17

A—Chain Idler
B—Nut (2 used)
C—Eyebolt
D—Mounting Bracket
E—Distance

NOTE: As the chain stretches, further adjustments are necessary.

Adjust the tension on the chain idler (A) as follows:

1. Loosen nuts (B).
2. Tighten the adjusting nut until the distance (E) from the mounting bracket (D) to the end of the eyebolt (C) is within specification.

Specification

Distance (E)—5 Foot Wide Pickup—Distance. . . . . 19 mm (0.748 in)

Specification

Distance (E)—6 Foot Wide Pickup—Distance. . . . . 50 mm (1.97 in)

3. Tighten nuts (B).

DP99999,0000E2C-19-26OCT17

Adjust Third Roll Valve Trigger (MegaWide™ HC2 Pickup Only)

If the third roll drive is not re-engaging (cylinder retracting when the tension arm is closed), perform the following adjustment:

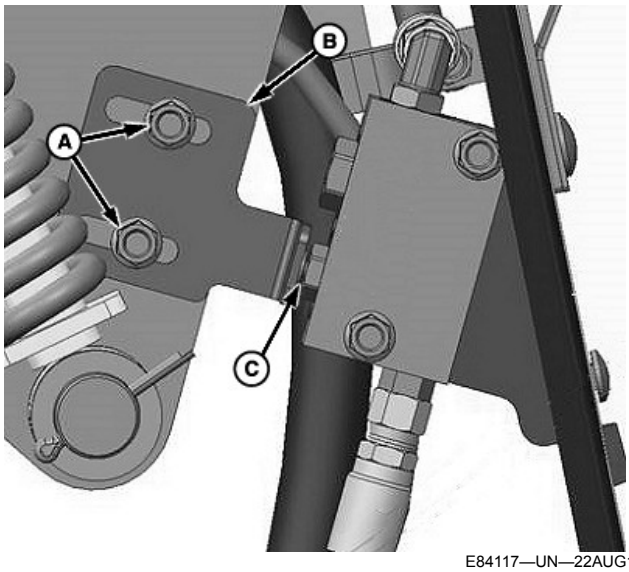

E84117—UN—22AUG17

A—Nut (2 used)
B—Bracket
C—Poppet Valve

1. Loosen nuts (A).
2. Adjust bracket (B) so that the poppet valve (C) is fully compressed (1.5 mm) when the tension arm is down fully. Tighten nuts (A).

NOTE: To verify that the third roll drive reengages, cycle the gate up and down.

SF04007,0000FAE-19-22SEP17

Replace Drive Roll Bearings or Sprockets

E54511—UN—15MAY06

Left-Hand Side Shown

E54507—UN—04MAY06

Right-Hand Side Shown

IMPORTANT: 1.5 and 3.0 mm thick washers at lower left-hand drive roll position only, must be machined and hardened to keep shaft end center bolt tight.

NOTE: When replacing the drive sprocket, the procedure for installing the center bolt and washers in the drive roll must be followed to avoid loosening of center bolt.

NOTE: Make note of all washers and spacers when removing drive roll bearings. Replace with new washers to ensure a proper joint. The exact number of washers and spacers must be installed in the same order and in same location as removed when the drive roll bearing is installed.

DP99999,0000DFD-19-17AUG17

Remove and Install Left-Hand Upper Drive Roll Bearing

IMPORTANT: To prevent bearing failure, always loosen the three RIGHT-HAND SIDE flange mounting bolts (A and B) and cap screw (C) before tightening the left-hand side (drive side) center bolt (D). Adjust and tighten the right-hand side mounting bolts per this instruction AFTER left-hand side is tightened.

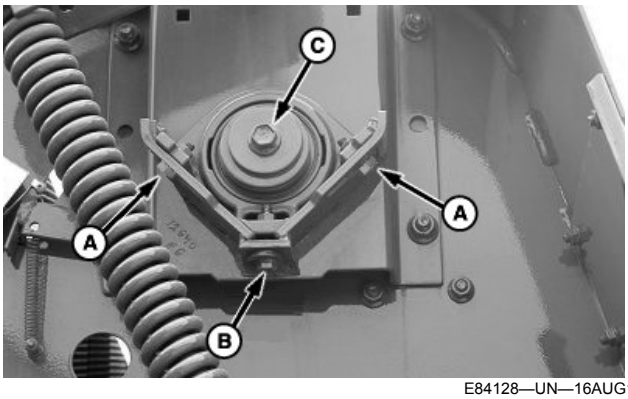

E84128—UN—16AUG17

Right-Hand Upper Drive Roll Bearing

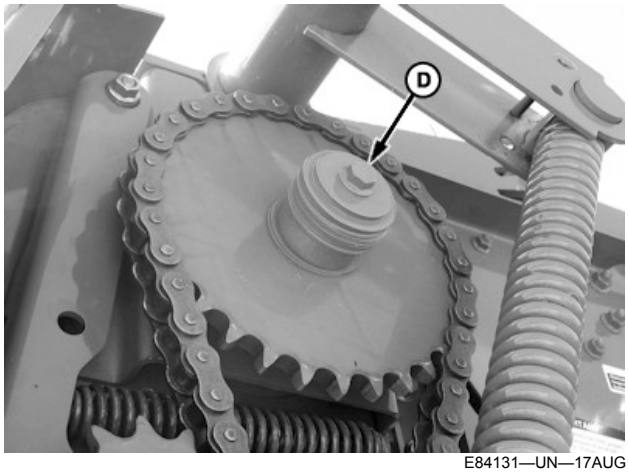

E84131—UN—17AUG17

Left-Hand Upper Drive Roll Bearing

A—Cap Screw, M8 (2 used)
B—Cap Screw, M10
C—Cap Screw, M12 x 80
D—Cap Screw, M12

1. Loosen flange mounting cap screws (A and B) and cap screw (C) on the right-hand side of the baler.
2. Remove cap screw (D) on the left-hand side of the baler.
3. Remove the drive chain.
4. Carefully remove the sprocket and washers, noting the position and number of washers removed at each location.
5. Remove the nuts retaining the drive roll bearing to the baler.
6. Remove and discard the bearing.

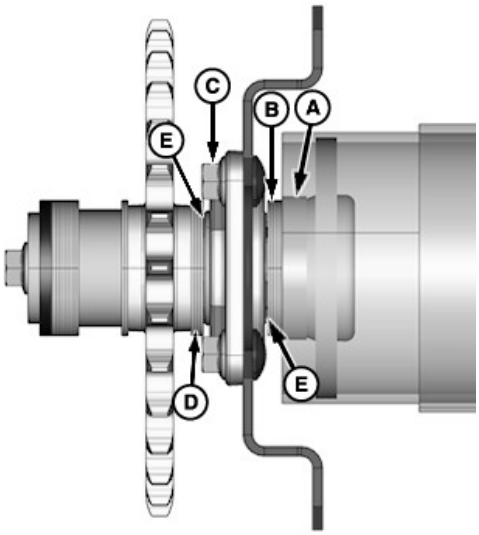

E67561—UN—27AUG12

A—Chamfered Spacer
B—Washer (5 used, as required)
C—Flanged Nut (4 used)
D—Washer (4 used, as required)
E—Washer, 45.2 x 57.2 x 0.9 mm (2 used)

7. Install the new bearing as follows:

a. Install chamfered spacer (A) with the chamfer toward the roll.

b. Install washers (B), washer (E), and the bearing on the shaft.

c. Install nuts (C) and tighten until snug.

d. Pull the roll firmly to the left-hand side of the baler.

IMPORTANT: Washer (E) must be next to the bearing.

8. Center the roll side-to-side:
   - Measure from the outer rubber strip to the side sheet on both sides to check roll centering.
   - The difference between the two dimensions must be 6 mm (0.24 in) or less.
   - If needed, add or remove washers (B) between the roll and the left-hand bearing to center the roll.

9. Tighten flange nuts (C) to specifications.

Specification

Flange Nut and Bolt—Torque. . . . . 95 N·m (70 lb·ft)

10. Install four washers (D), washer (E), and sprocket. Be sure the washer (E) is next to the bearing.

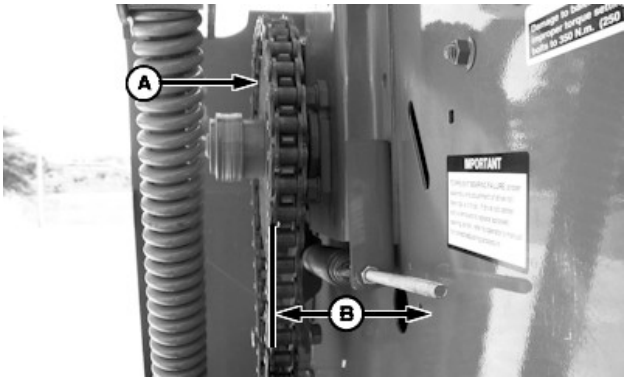

E58846—UN—29JUL10

A—Sprocket
B—Clearance, 91 mm (3.58 in)

11. Measure clearance (B) between the side sheet and the outer surface of sprocket (A). Clearance must be within specification.

Specification

Sprocket Clearance—Clearance. . . . . 91 mm (3.58 in)

12. If clearance is not within specification, add or remove washers between the sprocket and the bearing as necessary.

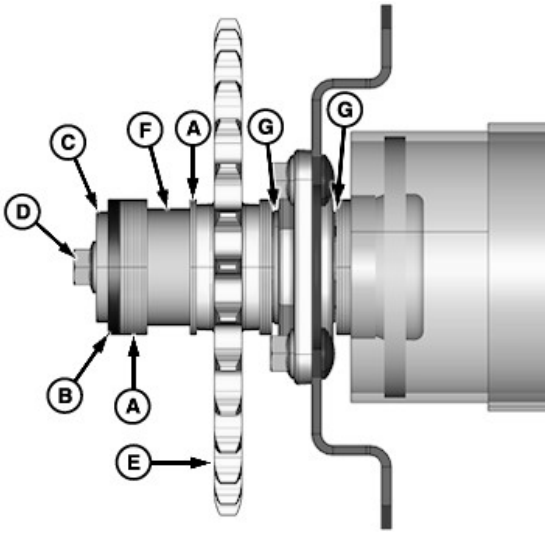

E67562—UN—27AUG12

A—Thin Washer, 1.5 mm (as required)
B—Washer, 6 mm (0.25 in)
C—Washer, 13 x 57 x 6 mm
D—Cap Screw, M12 x 75
E—Sprocket
F—Spacer
G—Washer, 45.2 x 57.2 x 0.9 mm (2 used)

13. To remove all the end play at the left-hand side of the baler, tap the right-hand side of the upper roll.

14. Hold the upper roll shaft to the left-hand side and push the sprocket (E) and washers inward.

IMPORTANT: To keep the center bolt from loosening and prevent hex knock, keep washers (A and B) centered on shaft. Ensure that washers do not rotate by hand. Joint must be clamped to eliminate hex knock.

15. Install washers (A) and spacer (F) on shaft.

16. Install washers (A) between the spacer and the end of the shaft, so that washers are flush with the end of the shaft, then add one washer (A).

17. Install 6 mm (0.25 in) washer (B). Install washer (C).

18. Install and tighten cap screw (D) to specification.

Specification

Cap Screw—Torque. . . . . 140 N·m (103 lb·ft)

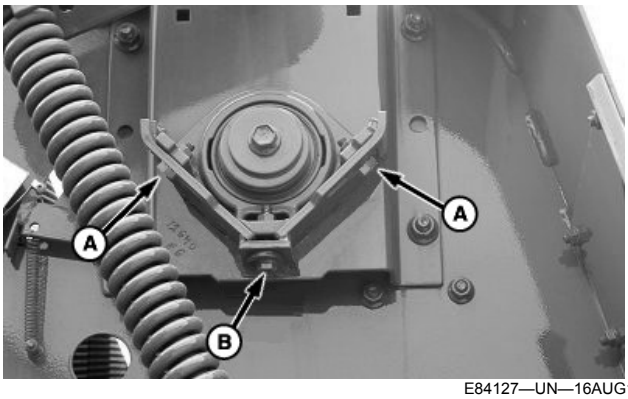

E84127—UN—16AUG17

Right-Hand Bearing

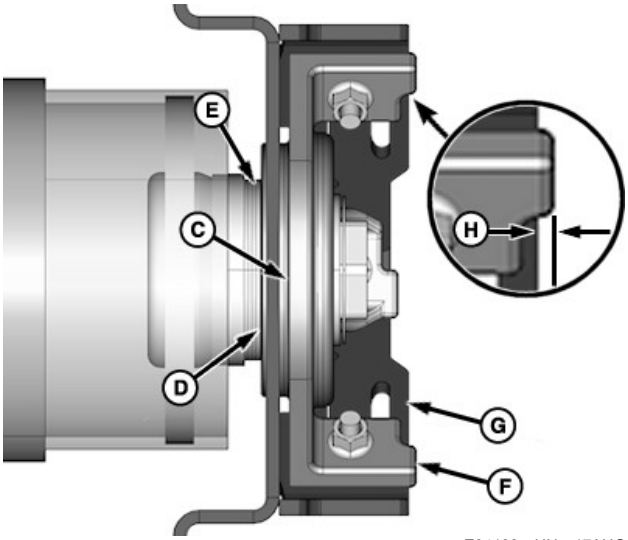

E84103—UN—17AUG17

A—Cap Screw, M8 (2 used)
B—Cap Screw, M10
C—Bearing
D—Washer, 45.2 x 57.2 x 0.9 mm
E—Thin Washer (4 used, as required)
F—Bearing Housing
G—Mounting Bracket
H—Distance

19. Check the position of the bearing assembly on the right-hand end of the drive roll.
    a. Remove and retain cap screws (A and B).
    b. Hold the bearing (C) tight against the washers.
    c. Check the distance (H) between the outer edge of the step in the cast bearing housing (F) and the edge of the mounting bracket (G) in all three locations. Verify that the dimension is within specification.

Specification

Distance (H)—Distance. . . . . 1.5—4.5 mm (0.059—0.177 in)

20. If the distance (H) is not within specification:
    a. Disassemble and remove the bearing assembly. Make note of the location of all washers.
    b. Add or remove washers (E) behind the bearing, as necessary, to obtain the correct distance in all three locations.
    c. Reinstall the bearing in the reverse order of removal. Make sure that washer (D) is installed next to the bearing.
    d. Recheck the mounting distance.

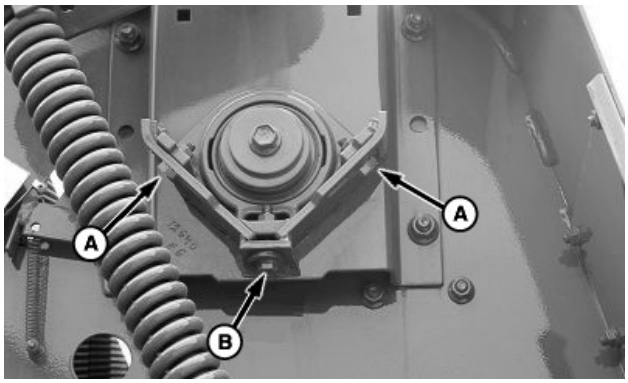

E84127—UN—16AUG17

A—Cap Screw, M8 (2 used)
B—Cap Screw, M10

21. Install previously removed cap screws (A and B). Tighten the cap screws only enough to get a light load between the bearing housing flanges and the mounting bracket. If necessary, lightly tap on the bearing housing to rotate the housing slightly and align the flanges at all three mounting locations. Do not fully tighten cap screws at this time.

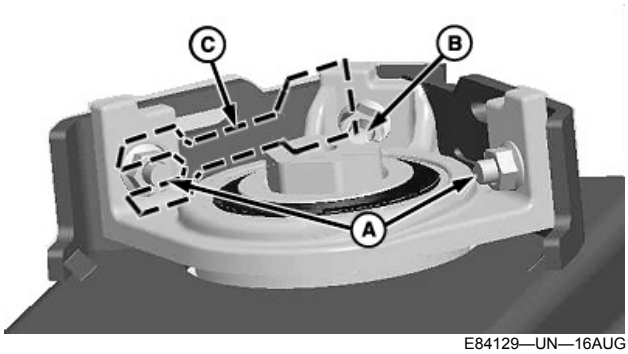

E84129—UN—16AUG17

A—Cap Screw, M8 (2 used)
B—Cap Screw, M10
C—Shim (as needed)

22. Check to see if roll is centered in the hole in the side sheet.
23. If the roll is not centered:
    a. Loosen cap screws (A and B).
    b. Insert shims (C) between the bearing mounting bracket and the cast bearing flanges as necessary.
    c. Snug up the cap screws but do not fully tighten at this time.

NOTE: Rolls must rotate freely. Check roll clearance through the hole in the side sheet.

If the roll is equipped with wiper pins, it is permissible to grind the wiper pins to 3 mm (0.12 in) minimum height.

24. To verify that the clearance with the side sheet hole is according to specifications, spin the upper drive roll. Add or remove shims (C) or move the right-hand bearing plate, or grind the wiper pins (if equipped).

Specification

Roller Clearance—Radial Clearance. . . . . 1 mm (0.04 in)

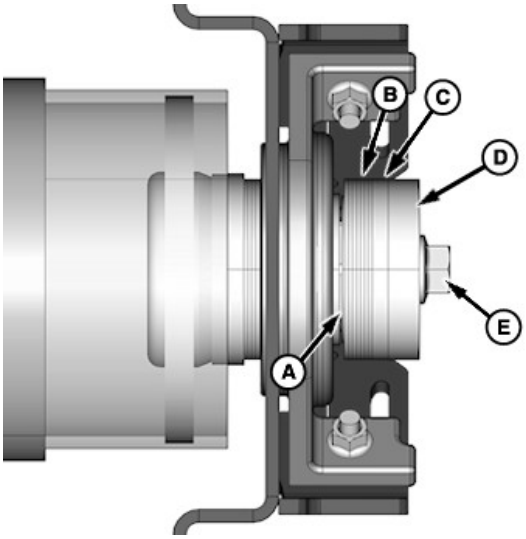

E84132—UN—17AUG17

A—Washer, 45.2 x 57.2 x 0.9 mm
B—Washers (as needed)
C—Thick Washer, Large ID
D—Washer, 13 x 70 x 12 mm
E—Cap Screw, M12 x 80

IMPORTANT: To keep the center cap screw from loosening or avoid hex knock, keep washers (B and) centered on the shaft.

Washer (A) must be next to the bearing.

NOTE: Steps 25—28 are required when hardware has been removed to adjust bearing mounting position.

25. Install washer (A) and washers (B between the bearing and the end of the hex shaft. Add washers (B) until flush with the end of the shaft, then add one more washer.
26. Install the large ID thick washer (C).
27. Install end washer (D) and cap screw (E).

IMPORTANT: To prevent bearing failure, always tighten cap screw (C) before tightening flange mounting cap screws (A and B).

NOTE: Ensure that the washers do not rotate by hand. Joint must be clamped to eliminate hex knock.

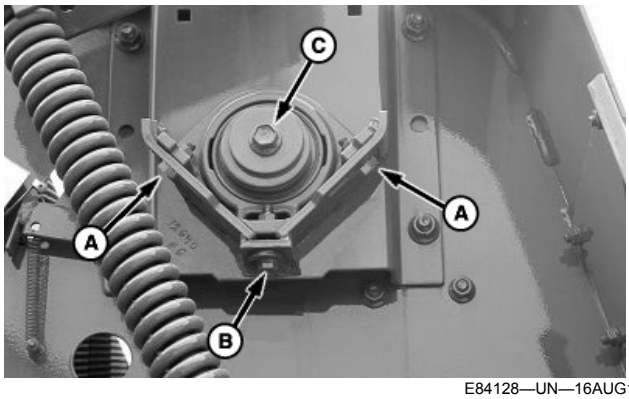

E84128—UN—16AUG17

A—Cap Screw, M8 (2 used)
B—Cap Screw, M10
C—Cap Screw, M12 x 80

28. Tighten cap screw (C) to specification.

Specification

M12 Cap Screw—Torque. . . . . 140 N·m (103 lb·ft)

29. Tighten middle flange mounting cap screw (B) first, then tighten cap screws (A). Tighten all cap screws to specification.

Specification

Cap Screw (B)—Torque. . . . . 80 N·m (59 lb·ft)

Cap Screw (A)—Torque. . . . . 40 N·m (30 lb·ft)

30. Check the distance between the outer edge of the cast step on the bearing housing and the edge of the mounting bracket in all three locations as previously described. If the distance is not within specification at all locations, repeat the previous steps to adjust and recheck.
31. Reinstall and adjust the drive chain.

DP99999,0000DFB-19-26OCT17

Remove and Install Right-Hand Upper Drive Roll Bearing

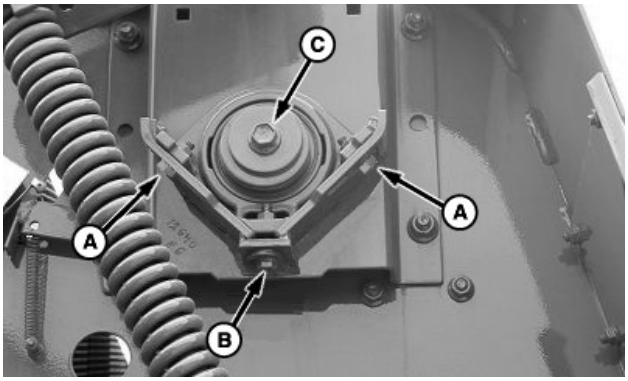

E84128—UN—16AUG17

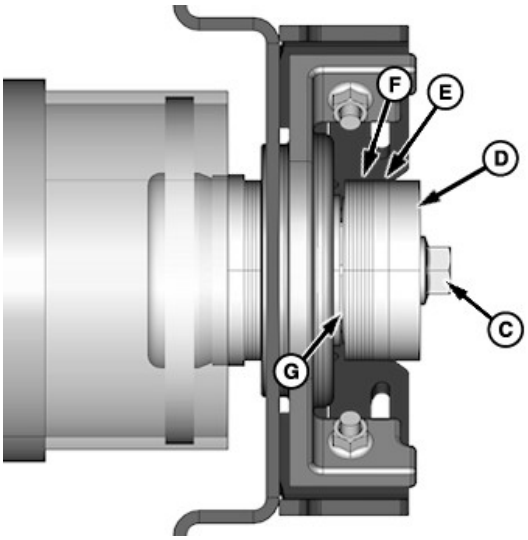

E84133—UN—18AUG17

A—Cap Screw, M8 (2 used)
B—Cap Screw, M10
C—Cap Screw, M12 x 80
D—Washer, 13 x 70 x 12 mm
E—Washer, Large ID Thick
F—Washers (as required)
G—Washer, 45.2 x 57.2 x 0.9 mm

1. Remove cap screws (A and B) retaining the bearing housing to the mounting bracket.
2. Remove cap screw (C) and washers (D—G). Note the quantity and position of all washers.

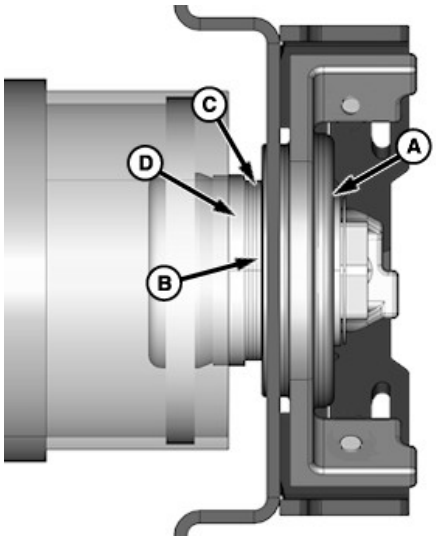

E84134—UN—18AUG17

A—Bearing
B—Washer, 45.2 x 57.2 x 0.9 mm
C—Washers (as required)
D—Spacer

3. Remove the bearing (A).
4. Remove washers (B and C) and spacer (D). Note the quantity and position of the washers.

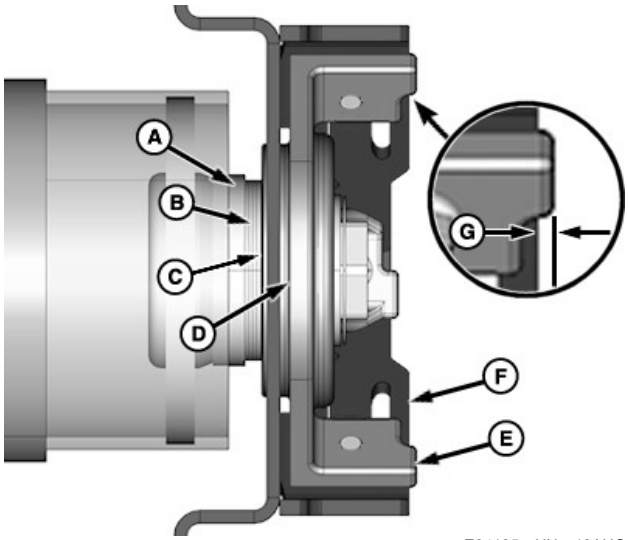

E84135—UN—18AUG17

A—Spacer
B—Thin Washer (4 used, as required)
C—Washer, 45.2 x 57.2 x 0.9 mm
D—Bearing
E—Bearing Housing
F—Mounting Bracket
G—Distance

5. Install spacer (A) with the chamfer pointing towards the center of the baler.

IMPORTANT: Washer (C) must be next to the bearing.

6. Install four washers (B) and washer (C).

7. Install bearing (D) and hold it tight against the washers.
8. Check the distance (G) between the outer edge of the step in the bearing housing (E) and the edge of the mounting bracket (F) at all three locations. Verify that the dimension is within specification.

Specification

Distance (G)—Distance. . . . . 1.5—4.5 mm (0.059—0.177 in)

9. If the distance (G) is not within specification:
   a. Remove the bearing (D) and washer (C).
   b. Add or remove washers (B) as necessary.
   c. Reinstall the washer and bearing and recheck the mounting distance in all three locations.

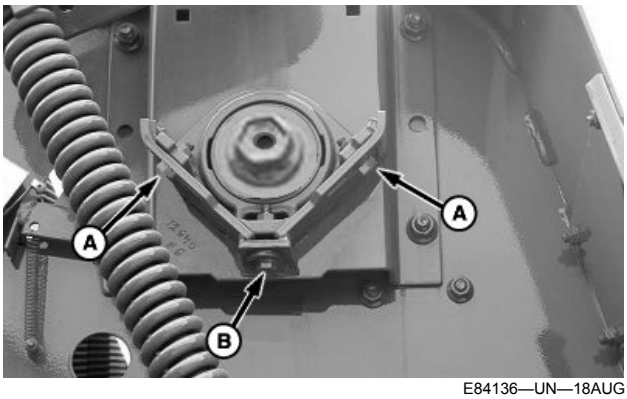

E84136—UN—18AUG17

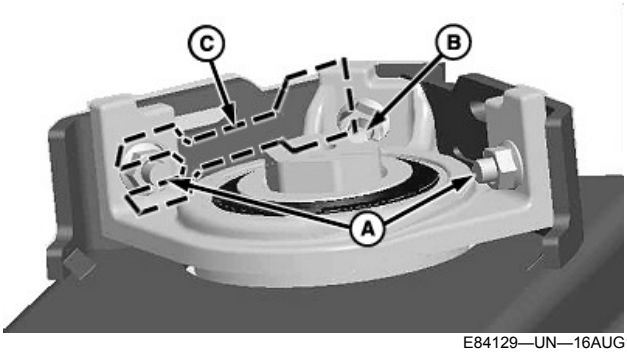

E84129—UN—16AUG17

A—Cap Screw, M8 (2 used)
B—Cap Screw, M10
C—Shim (as required)

10. Install previously removed cap screws (A and B). Tighten the cap screws only enough to get a light load between the bearing housing flanges and the mounting bracket. If necessary, lightly tap on the bearing housing to rotate the housing slightly and align the flanges with the bracket.
11. Check to see if the drive roll is centered in the side sheet.
12. If the roll is not centered:
    a. Loosen cap screws (A and B).
    b. Insert shims (C) between the bearing mounting bracket and the bearing housing flanges as necessary.
    c. Snug up the cap screws but do not fully tighten at this time.

NOTE: Rolls must rotate freely. Check roll clearance through the hole in the side sheet.

If the roll is equipped with wiper pins, it is permissible to grind the wiper pins to 3 mm (0.12 in) minimum height.

13. To verify that the clearance with the side sheet hole is according to the specifications, spin the upper drive roll. Add or remove shims (C) or move the right-hand bearing plate, or grind the wiper pins (if equipped).

Specification

Roller-to-Side Sheet—Radial Clearance. . . . . 1 mm (0.04 in)

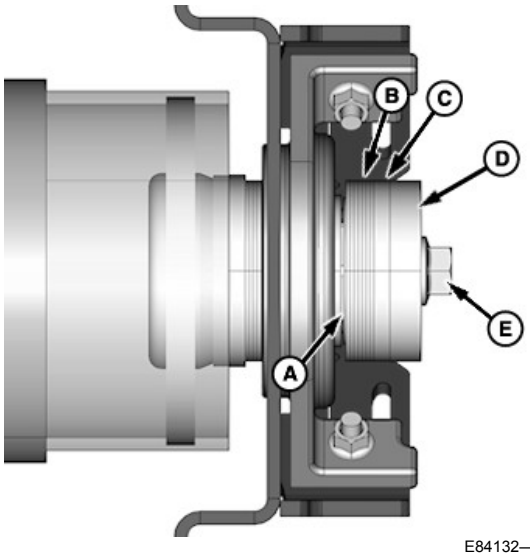

E84132—UN—17AUG17

A—Washer, 45.2 x 57.2 x 0.9 mm
B—Washers (as required)
C—Thick Washer, Large ID
D—Washer, 13 x 70 x 12 mm
E—Cap Screw, M12 x 80

IMPORTANT: To keep the center cap screw from loosening or avoid hex knock, keep washers (B and C) centered on the shaft.

Washer (A) must be next to the bearing.

14. Install washer (A) and washers (B) between the bearing and the end of the hex shaft. Add washers (B) until flush with the end of the shaft, then add one more washer. A washer must be next to the bearing on both sides.
15. Install the large ID thick washer (C).
16. Install end washer (D) and cap screw (E).

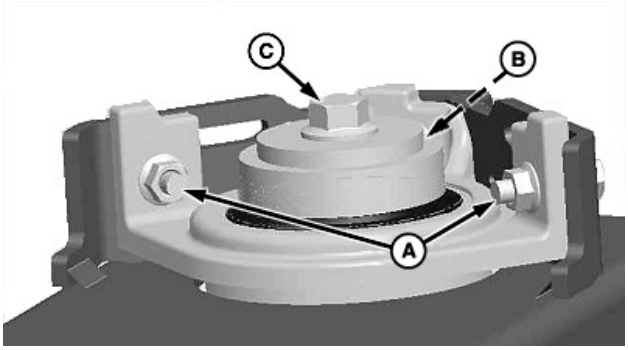

E57566—UN—09JUL09

A—Cap Screw, M8 (2 used)
B—Cap screw, M10
C—Cap Screw, M12 x 80 mm

IMPORTANT: To prevent bearing failure, always tighten cap screw (C) before tightening flange mounting cap screws (A and B).

NOTE: Ensure that the washers do not rotate by hand. The joint must be clamped to eliminate hex knock.

17. Tighten cap screw (C) to specification.

Specification

M12 Cap Screw—Torque. . . . . 140 N·m (103 lb·ft)

18. Tighten the middle flange mounting cap screw (B) first, then tighten cap screws (A). Tighten all cap screws to specification.

Specification

Cap Screw (B)—Torque. . . . . 80 N·m (59 lb·ft)

Cap Screw (A)—Torque. . . . . 40 N·m (30 lb·ft)

19. Check the distance between the outer edge of the step in the bearing housing and the edge of the mounting bracket in all three locations as previously described. If the distance is not within specification at all locations, repeat the previous steps to adjust and recheck.

DP99999,0000D42-19-26OCT17

Replace Left-Hand Lower Drive Roll Bearing

CAUTION: To prevent bearing failure, always loosen the three right-hand side flange mounting bolts (A) before tightening the left-hand side (drive side) center cap screw (B).

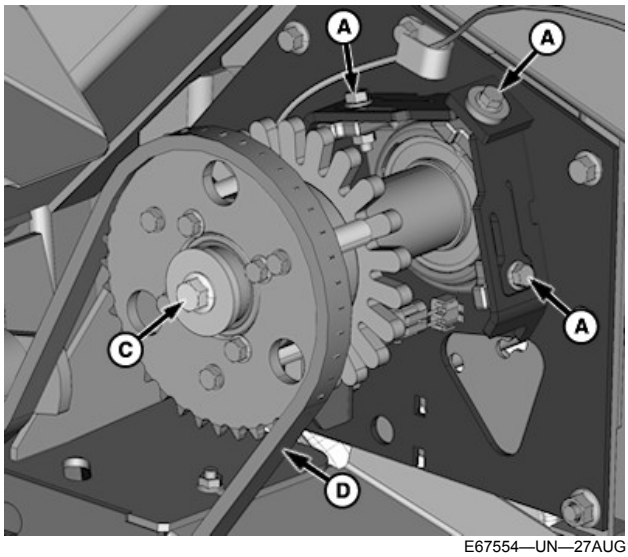

E67554—UN—27AUG12

Right-Hand Lower Drive Roll

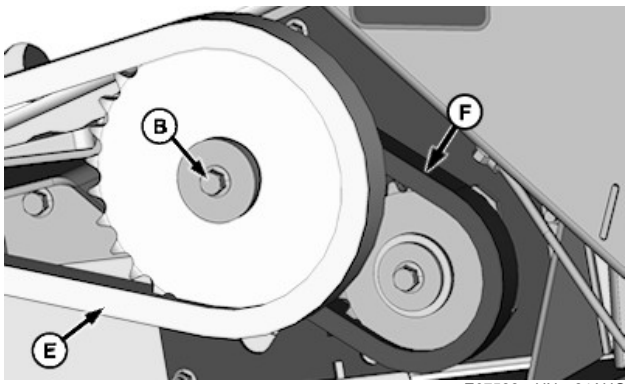

E67522—UN—24AUG12

Left-Hand Lower Drive Roll

A—Cap Screw (3 used)
B—Cap Screw, M12 x 80
C—Cap Screw, M12 x 80
D—Pickup Drive Roll Chain
E—Lower Drive Roll Chain
F—Starter Roll Chain

1. **Right-hand Side of Baler:**
   a. Loosen three cap screws (A) and cap screw (C).
   b. Remove pickup drive roll chain (D).
2. **Left-hand Side of Baler:** Remove crop buildup around shaft and roll area.
3. Remove cap screw (B) and sprocket, noting position and quantity of washers at each location.
4. Remove the lower drive roll chain (E) and the starter roll chain (F).
5. Remove four cap screws retaining the bearing housing and remove bearing.
6. Clean the roll shaft using a wire brush.

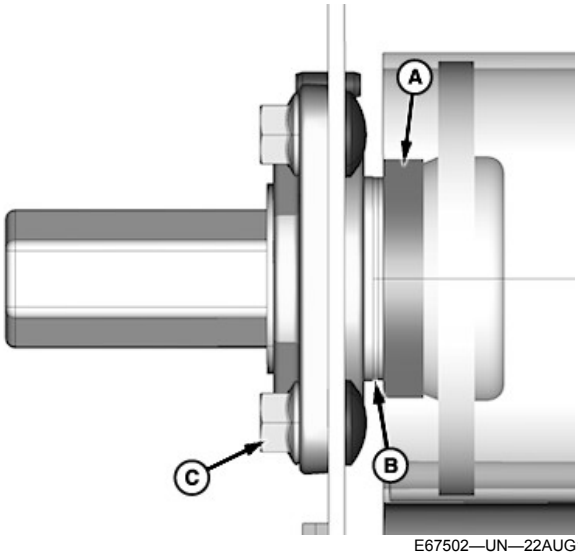

E67502—UN—22AUG12

E84138—UN—06SEP17

A—Chamfered Spacer
B—Hardened Washer (1.5 or 3 mm, as required)
C—Flange Nut (4 used)
D—Stamp (UP)

IMPORTANT: Clean washers and replace if necessary.

All 1.5 and 3.0 mm (0.06 and 0.12 in) thick washers are machined and hardened to help keep the center bolt from loosening and prevent hex knock. If washers must be replaced, obtain the proper washers from your John Deere dealer or qualified service provider.

Position bearing with the UP stamp (D) on the housing toward the top of baler.

7. Install the new bearing as follows:
   a. Install chamfered spacer (A) with the chamfer toward the roll.
   b. Install hardened washers (B) and the bearing on the shaft. Ensure that the UP stamp (D) is toward the top of the baler.
   c. Install flange nuts (C) and tighten until snug.
   d. Pull the roll firmly toward the left-hand side of the baler.
8. Center the roll side-to-side:
   a. Measure from the outer rubber strip to the side sheet on both sides to check roll centering.
   b. The difference between the two dimensions must be 6 mm (0.24 in) or less.
   c. If necessary, add or remove washers between the roll and the bearing to center the roll.
9. Tighten flange nuts (C) to specification.

Specification

Flange Nut and Bolt—Torque. . . . . 95 N·m (70 lb·ft)

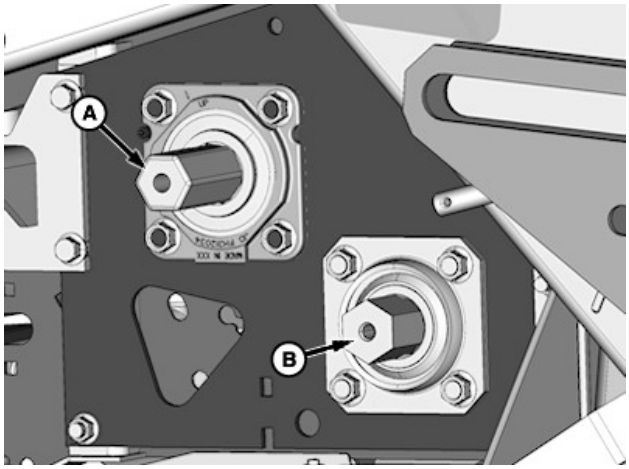

E67503—UN—23AUG12

A—Lower Drive Roll
B—Starter Roll

NOTE: It is permissible to grind drive roll wiper pins to 3 mm (0.12 in) height.

10. Wiper pins on the lower drive roll (A) and starter roll bars (B) must clear the side sheet holes according to specifications.

    If the roll wiper pins contact the side sheet hole, reposition the bearing housing or bearing plate or grind wiper pins.

Specification

Roll-to-Side Sheet—Radial Clearance. . . . . 1 mm (0.04 in)

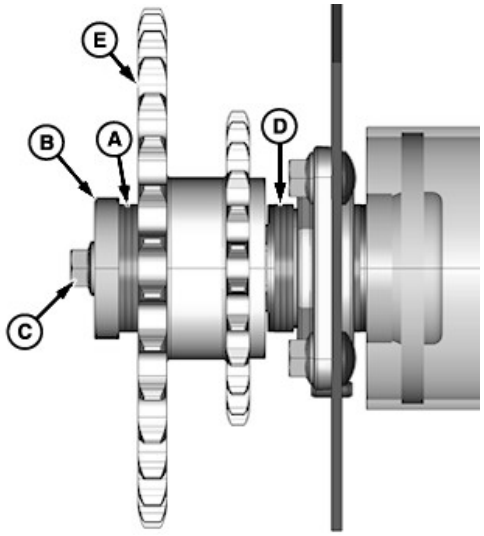

E67563—UN—18SEP12

A—Hardened Washers (3 mm, as required)
B—Thick Washer, 13 x 70 x 12 mm
C—Cap Screw, M12 x 80
D—Hardened Washers (1.5 or 3 mm, as required)
E—Sprocket

11. Install sprocket and hardened washers (D).
12. To remove all the end play at the left-hand side of the baler, tap the right-hand side of the roll.
13. Hold the lower roll shaft to the left-hand side and push the lower drive roll sprocket and washers inward.
14. Using a straight edge, check alignment between the gear case output shaft outer sprocket and the lower drive sprocket. Add or remove washers (D) between the bearing and the sprocket on the lower drive roll shaft, as necessary.
15. Add or remove regular washers between the bearing and sprocket on starter roll shaft, as needed, to align the starter roll sprocket with the lower drive roll sprocket.
16. Install sprocket (E) on the drive roll shaft.

IMPORTANT: To prevent hex knock and keep cap screw (C) from loosening, keep hardened washers (A) centered about shaft. Make sure hardened washers (A) are not clamped between the end of shaft and thick washer (B).

17. Install hardened washers (A) between the sprocket (E) and the end of shaft so that the washers extend 3—6 mm (0.12—0.24 in) past the end of the shaft.
18. Install cap screw (C) with thick washer (B). Tighten cap screw to specification.

Specification

Cap Screw (C)—Torque. . . . . 140 N·m (103 lb·ft)

19. Ensure that the washers do not rotate by hand. Joint must be clamped to eliminate hex knock.

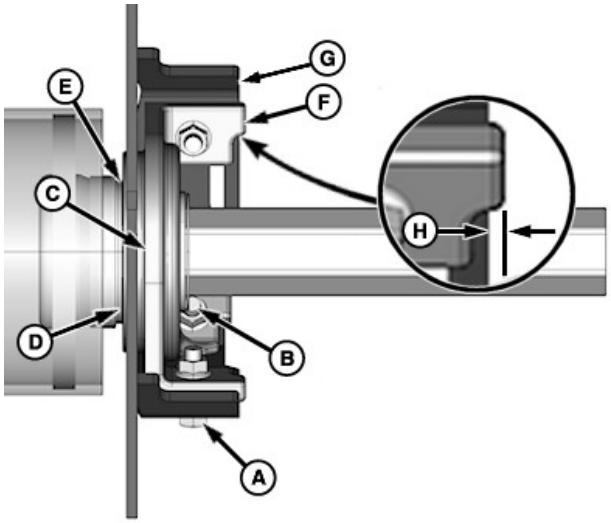

E84139—UN—22AUG17

Bearing Assembly (Right-Hand Side)

A—Cap Screw, M8 (2 used)
B—Cap Screw, M10
C—Bearing
D—Washer, 45.2 x 57.2 x 0.9 mm
E—Thin Washer (2 used, as required)
F—Bearing Housing
G—Mounting Bracket
H—Distance

20. Check the position of the bearing assembly on the right-hand end of the drive roll.
    a. Remove and retain cap screws (A and B).
    b. Hold the bearing (C) tight against the washers.
    c. Check the distance (H) between the outer edge of the step in the bearing housing (F) and the edge of the mounting bracket (G) in all three locations. Verify that the dimension is within specification.

Specification

Distance (H)—Distance. . . . . 1.5—4.5 mm (0.059—0.177 in)

21. If the distance (H) is not within specification:
    a. Disassemble and remove the bearing assembly. Make note of the location of all washers.
    b. Add or remove washers (E) behind the bearing, as necessary, to obtain the correct distance in all three locations.
    c. Reinstall the bearing in the reverse order of removal. Make sure that washer (D) is installed next to the bearing.
    d. Recheck the mounting distance.

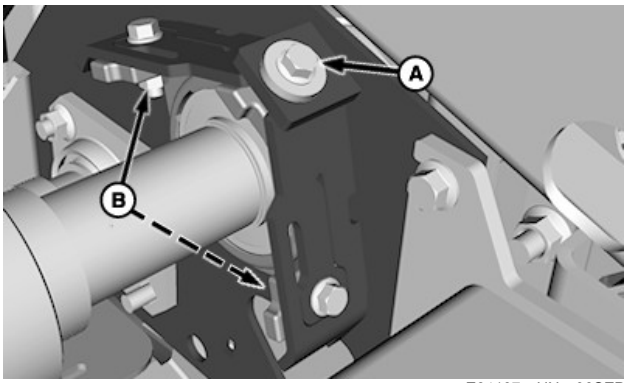

E84137—UN—06SEP17

Bearing (Right-Hand Side)

A—Flanged Cap Screw (3 used)
B—Flange Nut (2 used)

22. Install previously removed cap screws (A and B). Tighten the cap screws only enough to get a light load between the bearing housing flanges and the mounting bracket. If necessary, lightly tap on the bearing housing to rotate the housing slightly and align the flanges at all three mounting locations. Do not fully tighten the cap screws at this time.

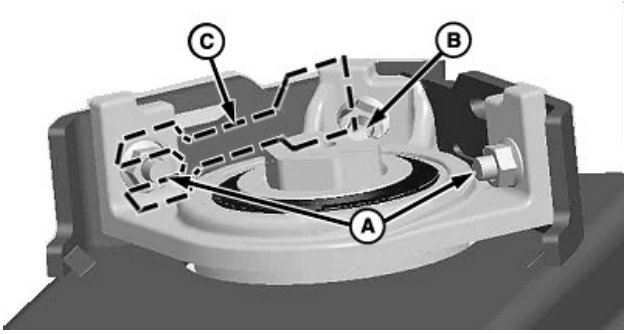

E84129—UN—16AUG17

A—Cap Screw, M8 (2 used)
B—Cap Screw, M10
C—Shim (as needed)

23. Check to see if the roll is centered in the hole in the side sheet.
24. If the roll is not centered:
    a. Loosen cap screws (A and B).
    b. Insert shims (C) between the bearing mounting bracket and the bearing housing flanges as necessary.
    c. Snug up the cap screws but do not fully tighten at this time.

NOTE: Rolls must rotate freely. Check roll clearance through the hole in the side sheet.

If the roll is equipped with wiper pins, it is permissible to grind the wiper pins to 3 mm (0.12 in) minimum height.

25. To verify that the clearance with the side sheet hole is according to specifications, spin the drive roll. Add or remove shims (C) or move right-hand bearing plate, or grind the wiper pins (if equipped).

Specification

Roller Clearance—Radial Clearance	1 mm (0.04 in)

IMPORTANT: To keep the center cap screw from loosening and prevent hex knock, keep washers or spacer (A) centered on shaft.

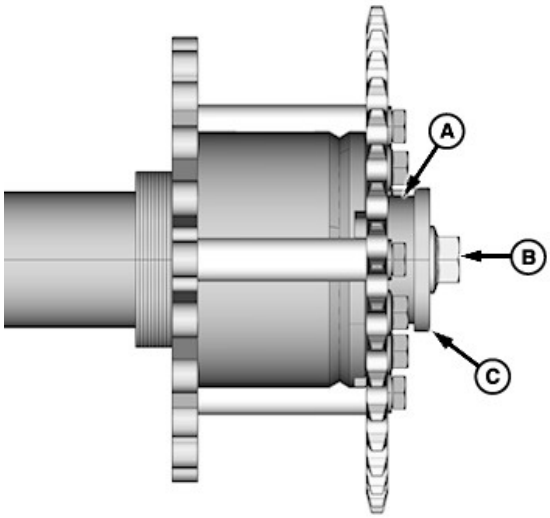

E67555—UN—27AUG12

MegaWide™ Plus Pickup Shown

A—Washers (Regular Pickup)
A—Spacer (MegaWide™ Plus Pickup)
B—Cap Screw, M12 x 80
C—Washer, 13 x 57 x 6 mm

26. Install washers, hollow sleeve, washers, and the slip clutch or sheave in same position and quantity removed. Then install washers or spacer (A) between clutch or sheave and washer (C) as specified here:

    MegaWide™ Plus pickup: Install spacer (A) against the face of clutch. Outside face of the spacer (A) must extend approximately 7 mm (0.28 in) beyond the end of the hex shaft. If it does not extend far enough, add thin washers between the spacer and clutch to obtain the required dimension.

NOTE: Be sure that there is no clearance between components.

27. Install cap screw (B) and washer (C) and tighten securely to clamp components on shaft.

MegaWide is a trademark of Deere & Company

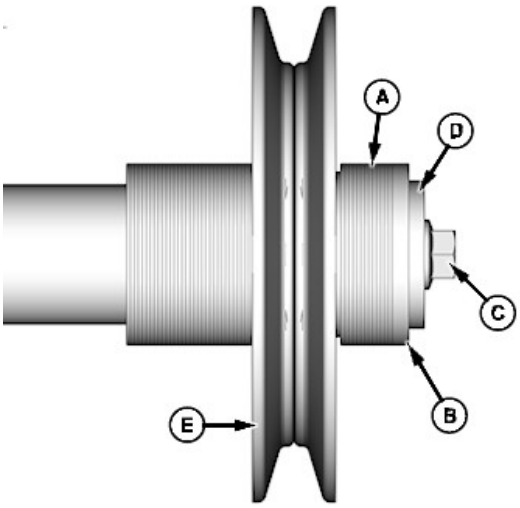

E67524—UN—24AUG12

Regular Pickup Shown

A—Washers
B—Washer, 6 mm (0.25 in)
C—Cap Screw, M12 x 80
D—End Washer, 13 x 57 x 6 mm
E—Hub of Sheave

28. **Regular pickup**: Install 1.5 mm (0.060 in) washers (A) against the outside of sheave until flush with the end of shaft, then add one more 6 mm (0.25 in) washer (B).

IMPORTANT: To keep the center cap screw from loosening and prevent hex knock, keep washer (A and B) centered on shaft.

29. Install cap screw (C) and end washer (D).

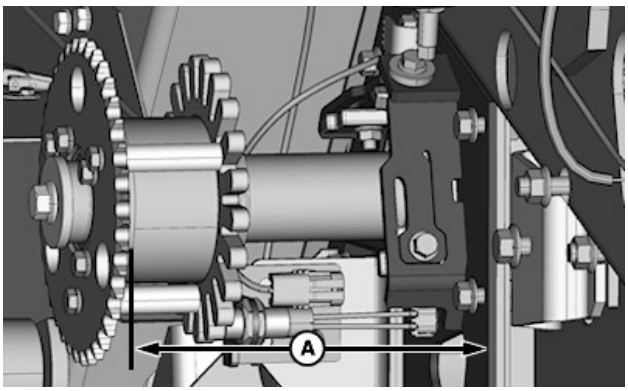

E67556—UN—27AUG12

MegaWide™ Plus Pickup Shown

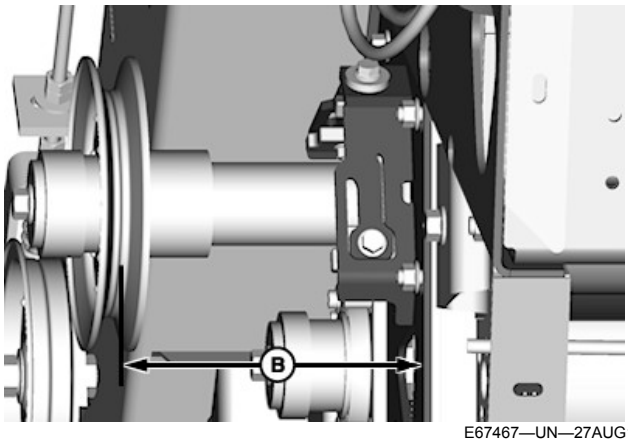

E67467—UN—27AUG12

Regular Pickup Shown

A—Dimension, 218 mm (8.58 in) (MegaWide™ Plus Pickup)
B—Dimension, 190 mm (7.48 in) (Regular Pickup)

30. Check dimension (A) between the face of the bearing plate and the inside of the slip clutch sprocket (MegaWide™ Plus pickup).

Specification

Dimension (A)—Distance. . . . . 218 mm (8.58 in)

Check dimension (B) between the face of the bearing plate and the center of the sheave groove (regular pickup).

Specification

Dimension (B)—Distance. . . . . 190 mm (7.48 in)

31. If the sheave or sprocket spacing dimension cannot be obtained within 1.5 mm (0.060 in), add or remove washers inside the slip clutch or sheave to obtain the dimension.

32. If washers are added or removed inside the slip clutch or sheave, repeat the previous steps to clamp components securely in place on the shaft.

IMPORTANT: To prevent bearing failure, always tighten cap screw (C) before tightening flange mounting cap screws (A and B).

NOTE: Ensure that washers do not rotate by hand. Joint must be clamped to eliminate hex knock.

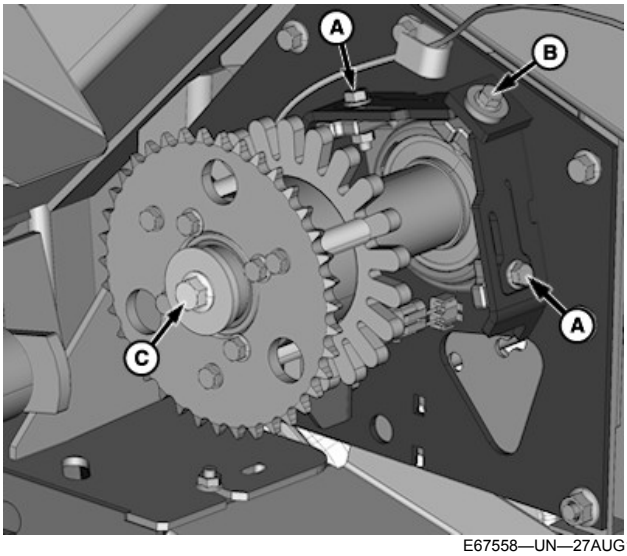

E67558—UN—27AUG12

MegaWide™ Plus Pickup Shown

A—Cap Screw, M8
B—Middle Cap Screw, M10
C—Cap Screw, M12 x 80

33. Tighten cap screw (C) to specification.

Specification

M12 Cap Screw—Torque. . . . . 140 N·m (103 lb·ft)

34. Tighten middle flange mounting cap screw (B) first, then tighten flange mounting cap screws (A). Tighten all cap screws to specification.

Specification

Cap Screw (B)—Torque. . . . . 80 N·m (59 lb·ft)

Cap Screw (A)—Torque. . . . . 40 N·m (30 lb·ft)

35. Check the distance between the edge of step on the bearing housing and the mounting bracket in all three locations. If the distance is not within specification at all locations, repeat the previous steps to adjust and recheck.

36. Reinstall all chains or belts and adjust properly.

DP99999,0000D22-19-26OCT17

Replace Right-Hand Lower Drive Roll Bearing

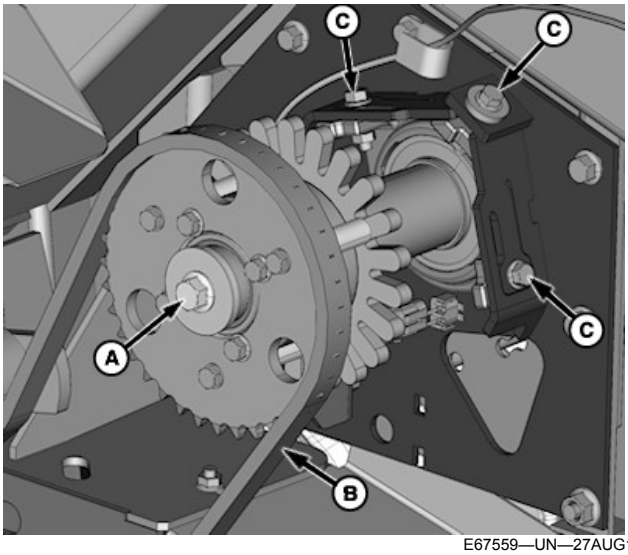

E67559—UN—27AUG12

A—Cap Screw
B—Drive Chain
C—Cap Screw (3 used)

1. Loosen cap screw (A).
2. Remove drive chain (B).
3. Carefully remove cap screw (A) and washers outside sprocket or sheave taking note of quantity and position of washers.
4. Remove sprocket and slip clutch or sheave.
5. Remove remaining washers, hollow sleeve, and washers next to the bearing, again noting the quantity and position of all the parts.
6. Remove cap screws (C) from the bearing and mounting flange. Note position and quantity of any shims between the bearing housing flange and the mounting bracket.
7. Remove the old bearing.
8. Install the new bearing and associated parts in the reverse order of removal.

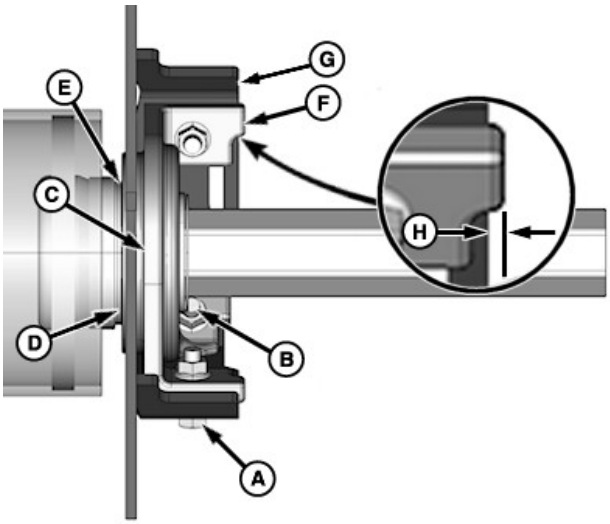

E84139—UN—22AUG17

Bearing Assembly (Right-Hand Side)

A—Cap Screw, M8 (2 used)
B—Cap Screw, M10
C—Bearing
D—Washer
E—Thin Washer (2 used, as required)
F—Bearing Housing
G—Mounting Bracket
H—Distance

9. Check the position of the bearing assembly on the right-hand end of the drive roll.
   a. Hold the bearing (C) tight against the washers.
   b. Check the distance (H) between the outer edge of the step in the bearing housing (F) and the edge of the mounting bracket (G) in all three locations. Verify that the dimension is within specification.

Specification

Distance (H)—Distance. . . . . 1.5—4.5 mm (0.059—0.177 in)

10. If the distance (H) is not within specification:
    a. Disassemble and remove the bearing assembly. Make note of the location of all washers.
    b. Add or remove washers (E) behind the bearing, as necessary, to obtain the correct distance in all three locations.
    c. Reinstall the bearing in the reverse order of removal. Make sure that washer (D) is installed next to the bearing.
    d. Recheck the mounting distance.
11. Install previously removed cap screws (A and B). Tighten the cap screws only enough to get a light load between the bearing housing flanges and the mounting bracket. If necessary, lightly tap on the bearing housing to rotate the housing slightly and align the flanges at all three mounting locations. Do not fully tighten the cap screws at this time.

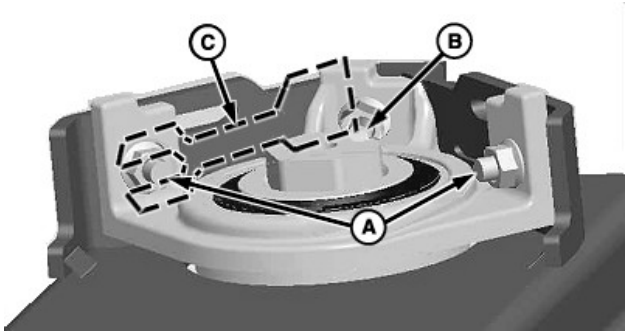

E84129—UN—16AUG17

A—Cap Screw, M8 (2 used)
B—Cap Screw, M10
C—Shim (as needed)

12. Check to see if the roll is centered in the hole in the side sheet.
13. If the roll is not centered:
    a. Loosen cap screws (A and B).
    b. Insert shims (C) between the bearing mounting bracket and the bearing housing flanges as necessary.
    c. Snug up the cap screws but do not fully tighten at this time.

NOTE: Rolls must rotate freely. Check roll clearance through the hole in the side sheet.

If the roll is equipped with wiper pins, it is permissible to grind the wiper pins to 3 mm (0.12 in) minimum height.

14. Spin the drive roll to verify clearance with the side sheet hole according to specifications. Add or remove shims (C) or move right-hand bearing plate, or grind the drive roll wiper pins (if equipped).

Specification

Roller Clearance—Radial Clearance. . . . . 1 mm (0.04 in)

IMPORTANT: To keep the center cap screw from loosening and prevent hex knock, keep washers or spacer (A) centered on shaft.

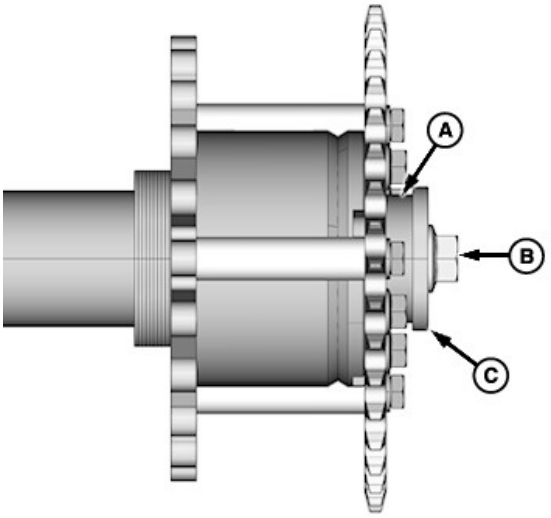

E67555—UN—27AUG12

MegaWide™ Plus Pickup Shown

A—Washers (Regular Pickup)
A—Spacer (MegaWide™ Plus Pickup)
B—Cap Screw, M12 x 80
C—Washer

15. Install washers, hollow sleeve, washers, and the slip clutch or sheave in the same position and quantity as removed. Then install washers or spacer (A) between the clutch or sheave and washer (C) as specified here:

    MegaWide™ Plus pickup: Install spacer (A) against the face of the clutch. The outside face of the spacer (A) must extend approximately 7 mm (0.28 in) beyond the end of the hex shaft. If it does not extend far enough, add thin washers between the spacer and the clutch to obtain the required dimension.

NOTE: Be sure that there is no clearance between components.

16. Install cap screw (B) and washer (C) and tighten securely to clamp components on shaft.

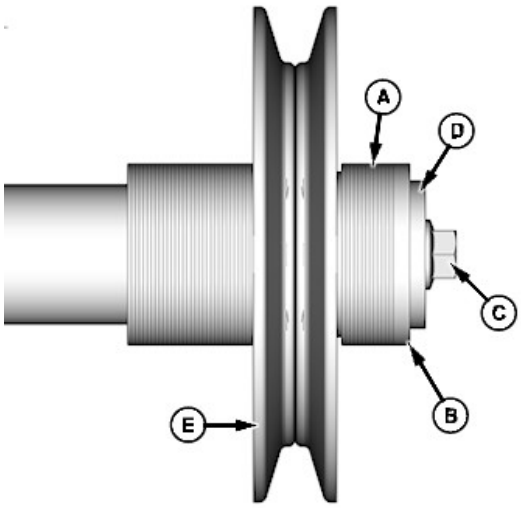

E67524—UN—24AUG12

Regular Pickup Shown

A—Washers
B—Washer, 6 mm (0.25 in)
C—Cap Screw, M12 x 80
D—End Washer
E—Sheave, Hub

17. **Regular pickup**: Install 1.5 mm (0.060 in) washers (A) against the outside of sheave (E) until flush with end of shaft, then add one 6 mm (0.25 in) washer (B).

IMPORTANT: To keep the center cap screw from loosening and prevent hex knock, keep washers (A and B) centered on shaft.

18. Install cap screw (C) and end washer (D).

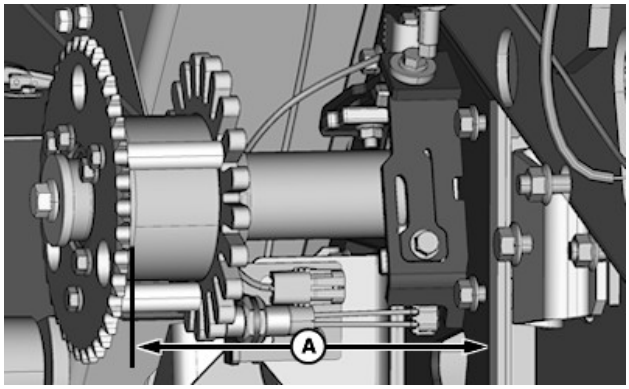

E67556—UN—27AUG12

MegaWide™ Plus Pickup Shown

MegaWide is a trademark of Deere & Company

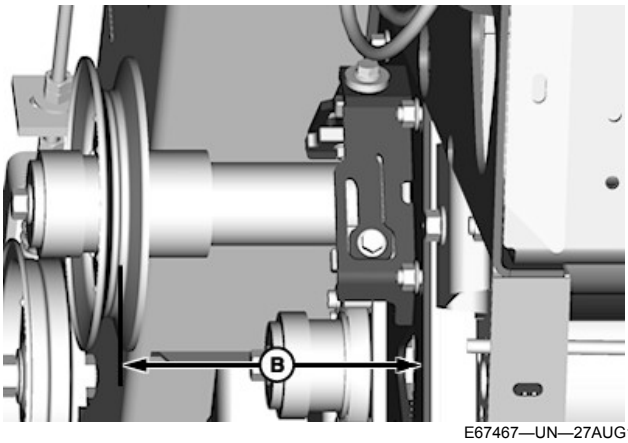

E67467—UN—27AUG12

Regular Pickup Shown

A—Dimension, 218 mm (8.58 in) (MegaWide™ Plus Pickup)
B—Dimension, 190 mm (7.48 in) (Regular Pickup)

19. Check dimension (A) between the face of the bearing plate and the inside of the slip clutch sprocket (MegaWide™ Plus pickup).

Specification

Dimension (A)—Distance. . . . . 218 mm (8.58 in)

Check dimension (B) between face of the bearing plate and the center of the sheave groove (Regular pickup).

Specification

Dimension (B)—Distance. . . . . 190 mm (7.48 in)

20. If the sheave or sprocket spacing cannot be obtained within ± 1.5 mm (0.060 in), add or remove washers inside the slip clutch or sheave to obtain the dimension.

21. If washers are added or removed inside the slip clutch or sheave, repeat the previous steps to clamp components securely in place on the shaft.

IMPORTANT: To prevent bearing failure, always tighten cap screw (C) before tightening flange mounting cap screws (A and B).

NOTE: Ensure that washers do not rotate by hand. Joint must be clamped to eliminate hex knock.

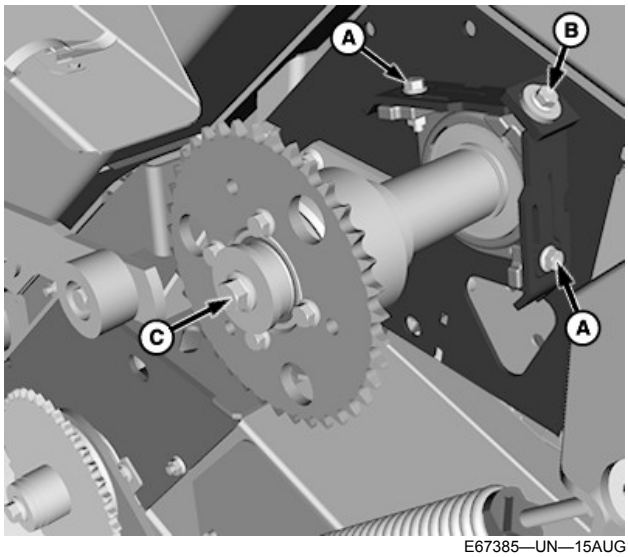

E67385—UN—15AUG12

MegaWide™ Plus Pickup Shown

A—Cap Screw, M8
B—Middle Cap Screw, M8
C—Cap Screw, M12 x 80 mm

22. Tighten cap screw (C) to specification.

Specification

M12 Cap Screw—Torque. . . . . 140 N·m (103 lb·ft)

23. Tighten the middle flange mounting cap screw (B) first, then tighten flange mounting cap screws (A). Tighten all cap screws to specification.

Specification

Cap Screw (B)—Torque. . . . . 80 N·m (59 lb·ft)

Cap Screw (A)—Torque. . . . . 40 N·m (30 lb·ft)

24. Check the distance between the edge of the step on the bearing housing and the mounting bracket in all three locations. If the distance is not within specification at all locations, repeat the previous steps to adjust and recheck.

25. Reinstall all chains or belts and adjust properly.

DP99999,0000D33-19-27NOV17

Remove Compressor Rack (Regular Pickup)

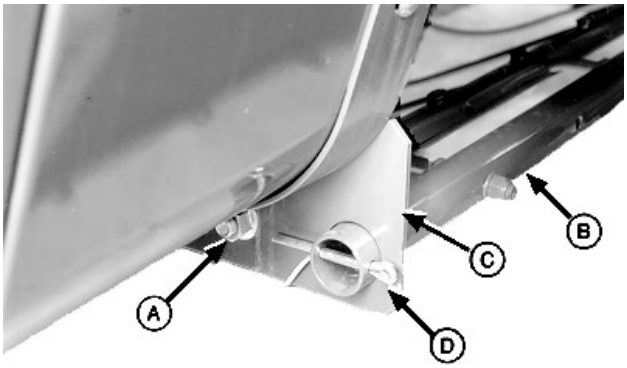

E40057—UN—17JUN96

A—Lock Nut
B—Compressor Rack
C—Right-Hand Bracket
D—Cotter Pin

1. Remove cap screw and lock nut (A). Remove cotter pin (D) from right-hand end of compressor rack tube.
2. Slide compressor rack (B) away from right-hand bracket (C).
3. Lower right-hand end and remove compressor rack from left-hand bracket.

PP98408,0000F63-19-07FEB13

Install Compressor Rack (Regular Pickup)

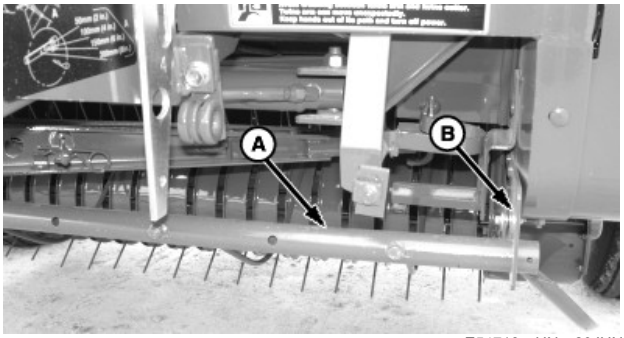

E54718—UN—29JUN06

A—Compressor Rack
B—Left-Hand Bracket

1. Install compressor rack (A) in left-hand bracket (B).

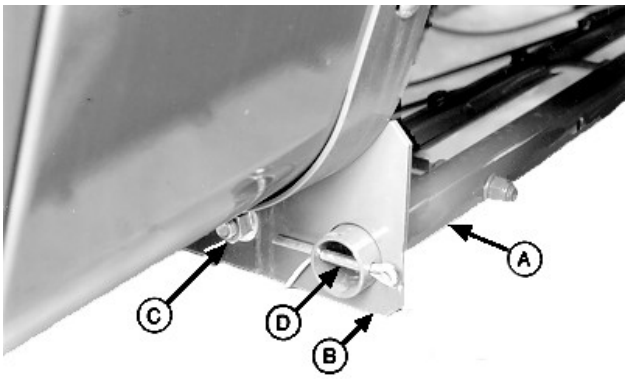

E40061—UN—22JUN96

A—Compressor Rack
B—Bracket
C—Lock Nut
D—Cotter Pin

2. Lift right-hand end and slide compressor rack (A) into bracket (B).
3. Install cap screw and lock nut (C). Install cotter pin (D) into right-hand end of compressor rack tube.

NOTE: Make sure that compressor rods do not interfere with twine arms. Adjust individual rods, as necessary, or adjust compressor rack for clearance.

4. Adjust to desired operating height. Tighten lock nut (C). (See ADJUST COMPRESSOR RACK in this section.)

PP98408,0000F64-19-07FEB13

Adjust Compressor Rack (Regular Pickup)

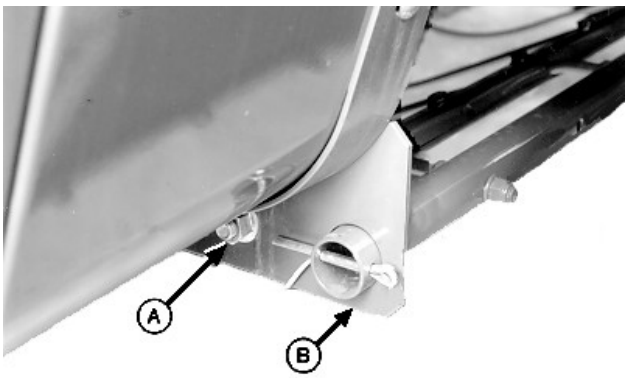

E40570—UN—23SEP99

A—Lock Nut
B—Mounting Bracket

To improve feeding, the compressor rack can be adjusted up or down.

1. Loosen lock nut (A).

NOTE: Make sure that compressor rods do not interfere with twine arm. Adjust individual rods, as necessary, for clearance.

2. Adjust rack to desired height.

For an initial height setting, adjust compressor rack strap parallel to edge of mounting bracket (B).

3. Tighten lock nut (A).

IMPORTANT: Belt damage can occur if crop is allowed to build up on top of compressor rack.

In short, dry, slick crops it can be necessary to remove compressor rods or compressor rack, if material builds up on top of rods. (See REMOVE COMPRESSOR RACK in this section.)

NOTE: Reinstall compressor rack or compressor rods when buildup conditions cease or when returning to bale hay crops.

PP98408,0000F65-19-07FEB13

Remove Compressor Rack (MegaWide™ Plus)

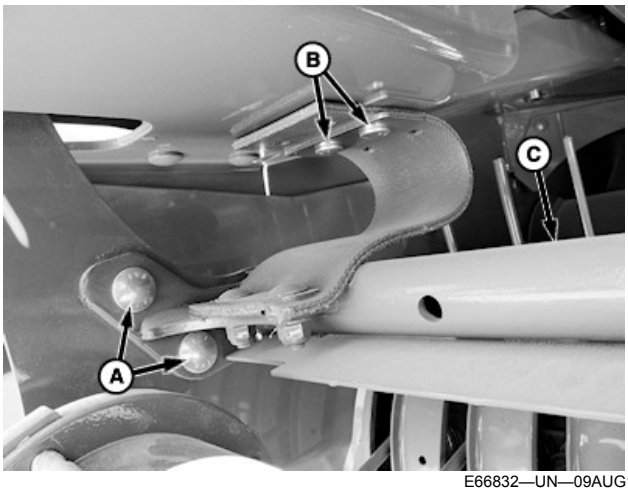

E66832—UN—09AUG12

A—Round-Head Bolt and Nut (2 each side)
B—Round-Head Bolt and Nut (2 each side)
C—Compressor Tube

1. Remove round-head bolts (B) from rubber strap. Repeat on opposite side of baler.
2. Remove round-head bolts (A) from bracket. Repeat on opposite side of baler.
3. Carefully lift and remove compressor tube (C) and rods.

PP98408,00010B1-19-09JUL13

Install Compressor Rack (MegaWide™ Plus)

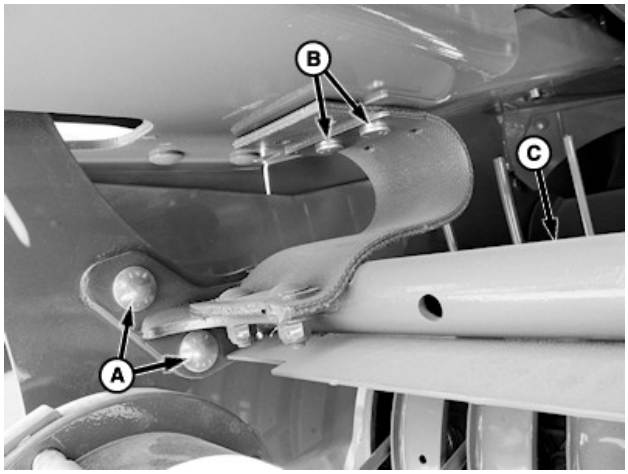

E66832—UN—09AUG12

A—Round-Head Bolt and Nut (2 each side)
B—Round-Head Bolt and Nut (2 each side)
C—Compressor Tube

1. Place compressor tube (C) over top of roller baffle, with rods pointing inside pickup.
2. Fasten rubber strap with round-head bolts (B).
3. Fasten compressor tube (C) with round-head bolts (A) to bracket.
4. Repeat Steps 1 and 2 on opposite side.
5. Adjust clearance between compressor rods and rotor strippers. (See ADJUST COMPRESSOR RODS in this section.)

PP98408,00010B2-19-09JUL13

Adjust Compressor Rods (MegaWide™ Plus)

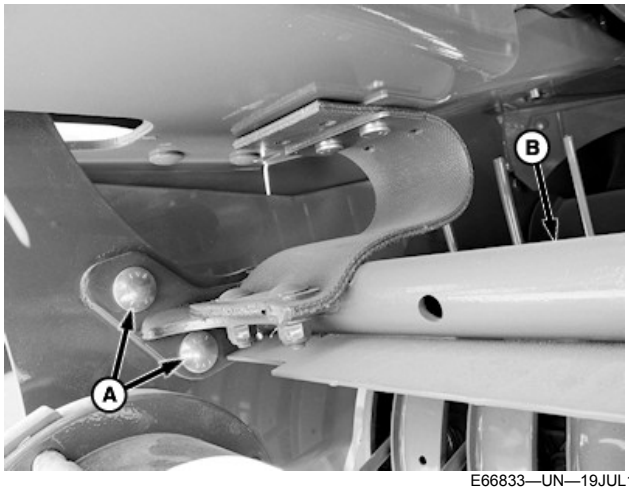

E66833—UN—19JUL12

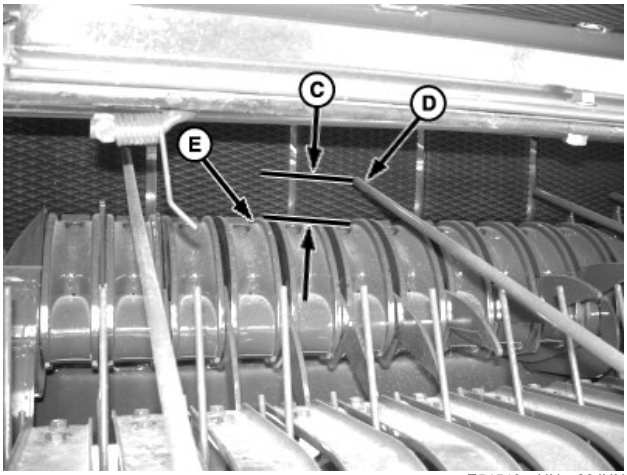

E54549—UN—28JUN06

A—Round-Head Bolt and Nut (2 each side)
B—Compressor Tube
C—Dimension, 25—30 mm (1—1 3/16 in.)
D—Compressor Rods
E—Stripper

Adjust compressor rods whenever rods are replaced, roller baffle height is adjusted, or if compressor rack has been removed.

1. If rods are replaced, loosen round-head bolts and nuts (A) on both sides of compressor rack.
2. Adjust compressor tube (B) until dimension (C) is 25—30 mm (1—1 3/16 in.) between compressor rods (D) and rotor stripper (E). Tighten round-head bolts (A) and nuts.
3. Cycle twine arm and check for interference.

PP98408,00010B3-19-09JUL13

Remove and Install Roller Baffle (MegaWide Plus Pickup)

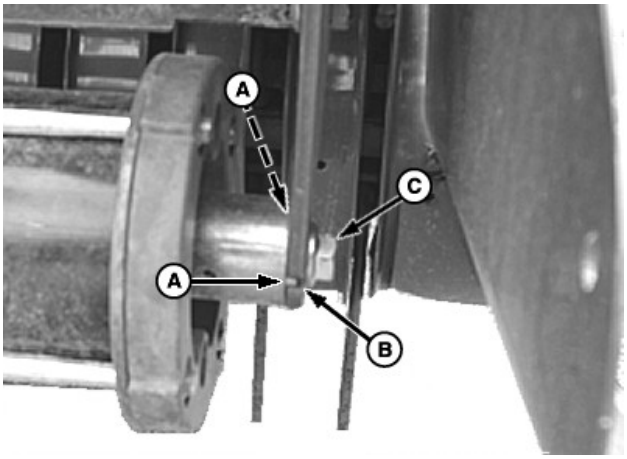

E54716—UN—27JUN06

A—Locating Pins (2 one each side)
B—Slot (Front and Back of Bracket)
C—Flange-Head Cap Screw (1 each side)

1. Remove cap screw (C) from each end of roller.

NOTE: Roller is heavy. Use care when removing the locating pins from the bracket. Support first end of the roller before removing the locating pins from the opposite side.

2. Carefully, remove the locating pins (A) from the slots (B). Lower the end of the roller to a support while removing locating pins from the opposite side.
3. Remove locating pins from the other side and carefully remove the roller baffle.

Install Roller Baffle

NOTE: Support the roller so each end will be approximately the same height.

1. Install roller baffle locating pins (A) into slots (B) on support bracket. Repeat on opposite side.
2. Fasten each end of the roller baffle with the cap screw (C).

   If an adjustment is needed, See Adjust Roller Baffle Height in this section.

SF04007,0000F60-19-06JUN17

Remove and Install Roller Baffle (MegaWide™ HC2 Feed System)

CAUTION: If the roller baffle and compressor rack are removed as an assembly, the assembly weighs approximately 55 kg (122 lb).

The roller baffle only, with hardware, weighs approximately 38 kg (84 lb).

NOTE: The roller baffle and compressor rack can be removed as assembly if necessary.

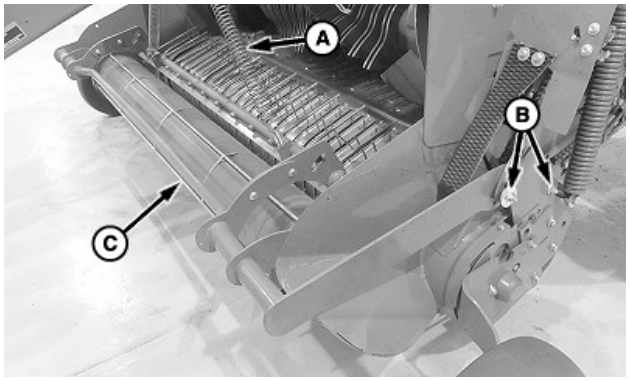

E83548—UN—19JUN17

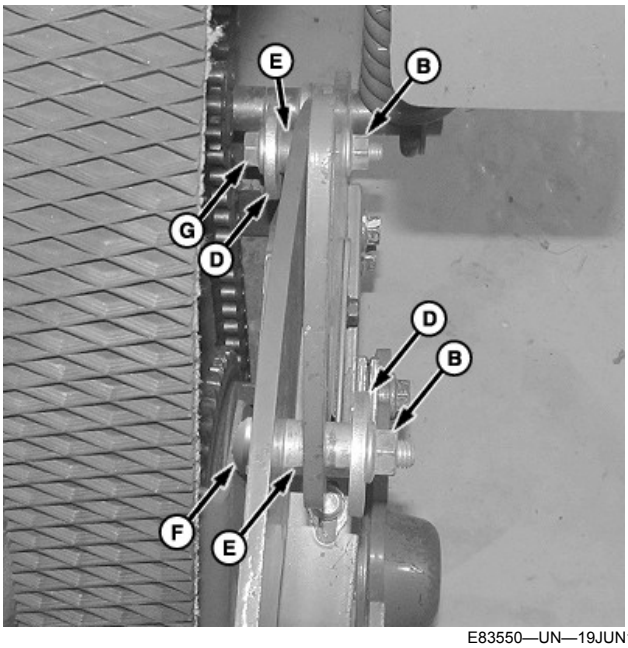

E83550—UN—19JUN17

Left-Hand Side Shown

A—Spring (2 used)
B—Nut (4 used)
C—Roller Baffle
D—Washer (4 used)
E—Bushing (4 used)
F—Front Carriage Bolt (2 used)
G—Rear Cap Screw (2 used)

1. Remove the compressor rack if necessary.
2. Raise the pickup and disconnect the springs (A). Lower the pickup.

NOTE: Record the mounting hardware orientation as removed.

3. Remove the nuts (B) on the roller baffle as the washers (D), bushings (E), carriage bolts (F), and cap screws (G) are removed.
4. Remove the roller baffle (C) from the machine.
5. Install in the reverse order of the removal procedure.

SF04007,0000EEE-19-20JUN17

Adjust Roller Baffle Height

IMPORTANT: Do not remove plastic tie bands from pickup baffle roller. If tie bands are removed, crop could wrap around roller between rods and tube.

Replace missing tie bands as soon as possible.

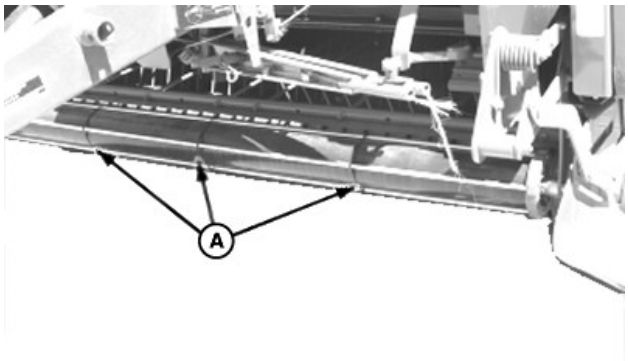

E54551—UN—02MAY06

A—Tie Bands (2 used on 460M) (3 used on 560M)

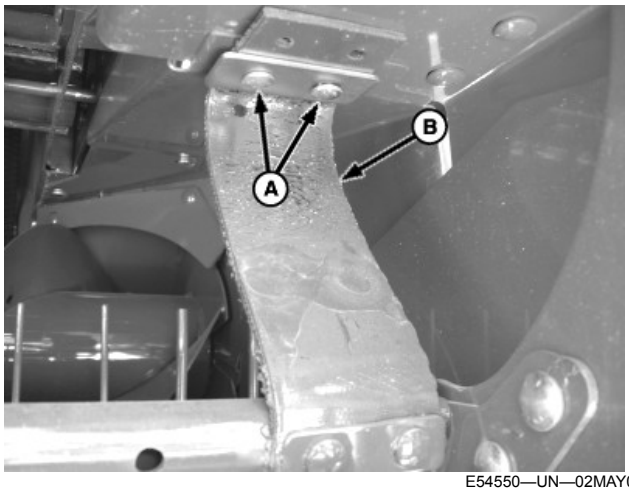

E54550—UN—02MAY06

A—Round-Head Bolts (2 each side)
B—Rubber Belt

1. Baffle height is adjusted by removing round-head bolts (A) and moving top end of the rubber belt forward, or to the rear.
2. To increase baffle height from ground, move belt (B) to rear holes. Fasten with round-head bolts (A).
3. To decrease baffle height from ground, move belt (B) to front holes. Fasten with round-head bolts (A).
4. Repeat steps 2 and 3 on the opposite side.
5. Adjust clearance between compressor rods and rotor strippers. (See ADJUST COMPRESSOR RODS in this section.)

DP99999,0000D23-19-25APR17

Adjust Roller Baffle Float Tension

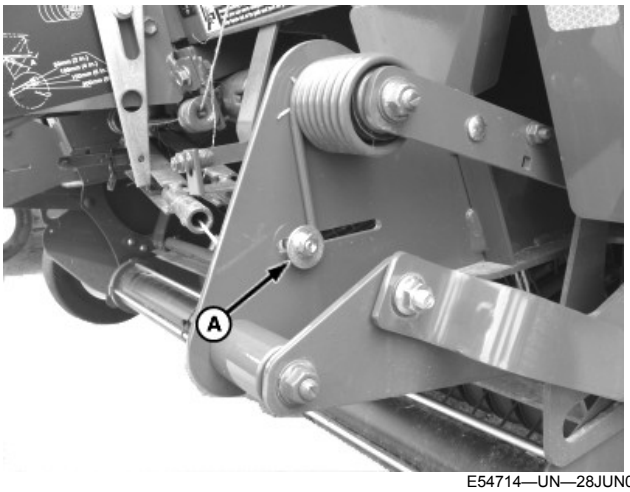

E54714—UN—28JUN06

A—Nut

NOTE: Float tension spring must be adjusted evenly on both sides of roller baffle.

To move tension spring, pry between washer and front of slot to move spring tine to rear.

- To increase float, loosen nut (A) and move spring tine to the rear.
- To decrease float, loosen nut (A) and let spring tine move forward.
- Repeat on opposite side.

PP98408,00010B6-19-11FEB13

Balance Roller Baffle

IMPORTANT: Do not remove plastic tie bands from pickup baffle roller. If tie bands are removed, crop could wrap around roller between rods and tube.

Replace missing tie bands as soon as possible.

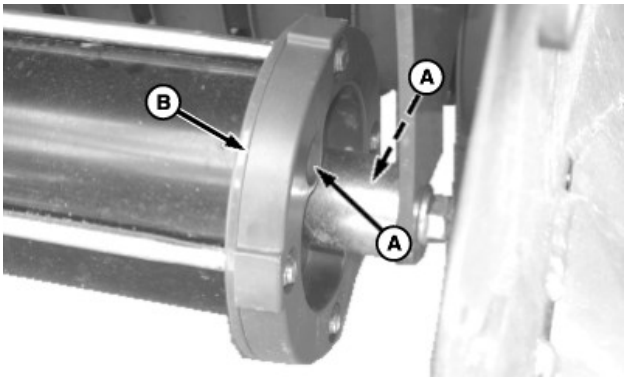

E82681—UN—11APR17

A—Self-Tapping Screw (2 used)
B—Plastic Cover

1. Remove self-tapping screws (A) and plastic cover (B).
2. Remove all crop and dirt buildup from between roller and rods, and at roller ends.

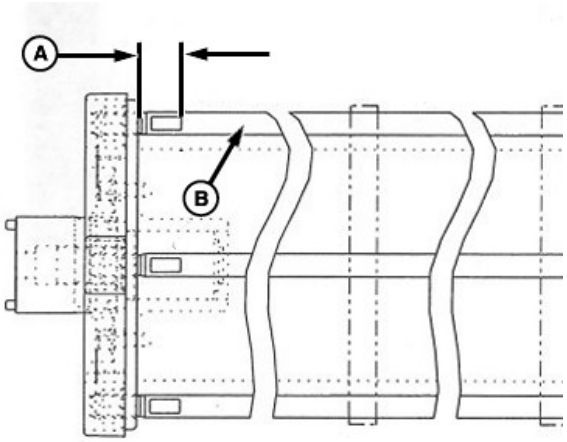

E82682—UN—25APR17

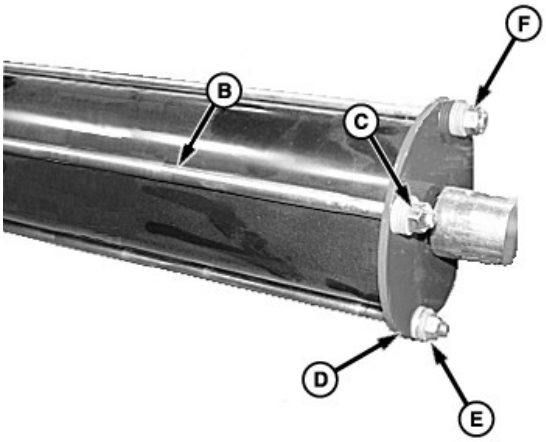

E82683—UN—25APR17

A—Distance
B—Rod
C—Nut
D—Mark
E—Nut
F—Nut

3. Measure the distance (A) from the inside of the wrench flat on rod (B) to the inside edge of the end cap.
4. Adjust nut (C) on the rod as necessary to adjust dimension within specification.

Specification

Distance (A)—Distance. . . . . 18—20 mm (0.70—0.78 in)

5. Repeat the preceding step for each rod.
6. Spin the roller to find the heavy point, or where bow in roller and gravity causes the roller to stop turning.
7. At the heavy point (directly below the roller axis), place a mark (D) beside closest nut. Tighten nut (E) 1/4 turn, then spin the roller again to check balance.

8. If the roller is still heavy on the same point, loosen the opposite nut (F) 1/4 turn and spin roller to check balance.
9. Repeat steps 6—8 until the roller spins evenly.
10. Install the plastic cover and retain with previously removed self-tapping screws.

DP99999,0000D35-19-27APR17

Adjust Main PTO Driveline Slip Clutch (MegaWide Plus and Regular Pickup)

IMPORTANT: Dirt can become trapped between the pressure plate and the disk spring, preventing the disk spring from flattening. Disassemble the clutch and clean dirt from between the pressure plate and the disk spring. Damage to the baler can occur if the clutch cannot slip when necessary.

IMPORTANT: If the distance between the rear plate and the tab on the pressure plate is outside the specifications, the slip clutch can either not slip or can slip too easily. Damage to the drive components can occur if the clutch cannot slip.

Failure to follow the order of the following steps can damage the clutch.

NOTE: The clutch can be adjusted while on the machine.

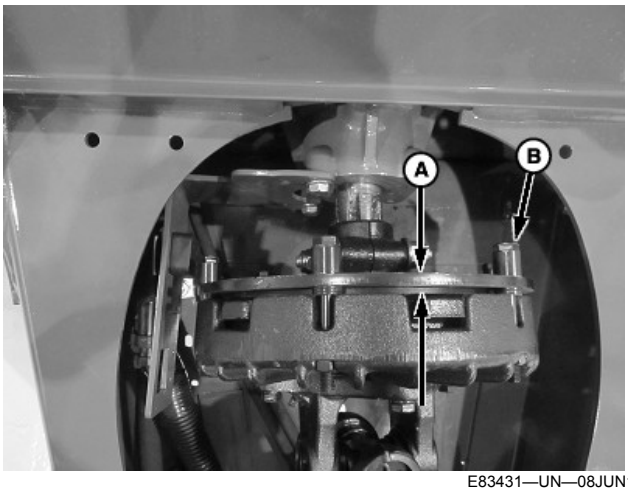

E83431—UN—08JUN17

540 rpm Bracket Assembly Shown

A—Distance
B—Cap Screw

1. Using tractor hydraulics, raise the gate fully to slacken the belts.
2. Turn off the tractor engine and remove the key.
3. Lock the gate.
4. Disconnect the PTO driveline from the tractor.
5. Measure distance (A).

Specification

Rear Plate-to-Tab on Pressure Plate—Distance. . . . . 4.7—7.1 mm (0.185—0.280 in)

6. If distance (A) exceeds specification, perform the following:
   a. Remove one cap screw (B) from clutch.
   b. Remove one washer between the rear plate and the clutch housing.
   c. Install the washer between the head of the cap screw (B) and the rear plate.
   d. Tighten the cap screw.
   e. Repeat steps a—d for the remaining five cap screws.
7. If distance (A) is less than specification, perform the following:
   a. Remove one cap screw (B) from the clutch.
   b. Remove one washer between the head of the cap screw (B) and the rear plate.
   c. Install washer between the rear plate and clutch housing.
   d. Tighten cap screw.
   e. Repeat steps a—d for the remaining five cap screws.
8. Measure distance (A). If the distance is still not within specification, and there are no washers between the rear plate and the housing, replace the clutch friction disk.
9. Unlock and the lower the gate.

DP99999,0000E32-19-27SEP17

Slip Main PTO Driveline Slip Clutch

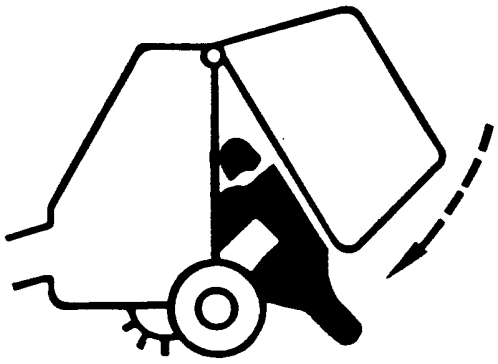

TS698—UN—21SEP89

CAUTION: If not locked, the gate can close suddenly and cause injury or death. Make sure that the gate is locked while performing this procedure.

IMPORTANT: Dirt can become trapped between the pressure plate and the disk spring, preventing the disk spring from flattening. Disassemble the clutch and clean dirt from between the pressure plate and the disk spring. Damage to the baler can occur if the clutch cannot slip when necessary.

At the beginning of each season, verify that the baler or tractor main drive slip clutch is not seized. If the clutch is seized, drivetrain damage can occur.

NOTE: MegaWide™ HC2 equipped balers have a cam clutch in this same location that requires no maintenance.

1. Using tractor hydraulics, raise the gate fully to slacken the belts.
2. Turn off the tractor engine and remove the key.
3. Lock the gate.
4. Disconnect the PTO driveline from the tractor.

IMPORTANT: Loosen slip clutch bolts evenly. Failure to do so can cause the clutch to fail.

If the baler is operated with a seized-up clutch, damage to the drivetrain can result.

NOTE: Do not loosen cap screws more than three turns.

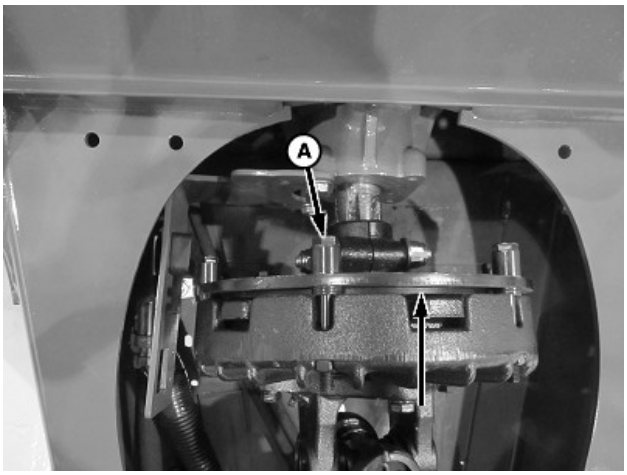

E83438—UN—12JUN17

A—Slip Clutch Cap Screw (6 used)

5. Loosen the six cap screws (A) evenly, 1—2 turns at a time.

CAUTION: Never use any type of tool or wrench on the shaft while the tractor engine is running. Always remove tools from the shaft immediately after use.

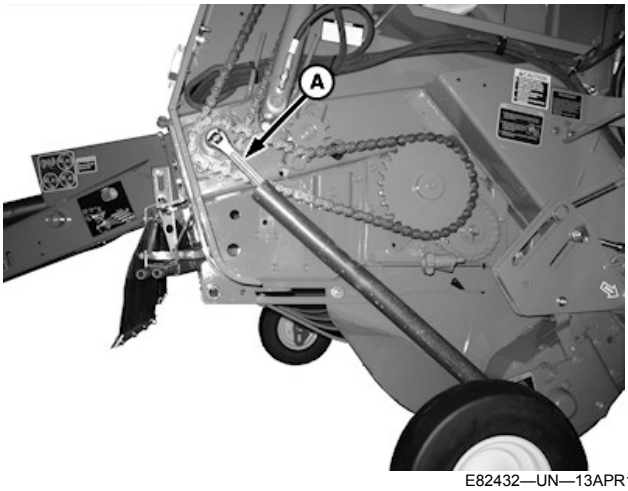

E82432—UN—13APR17

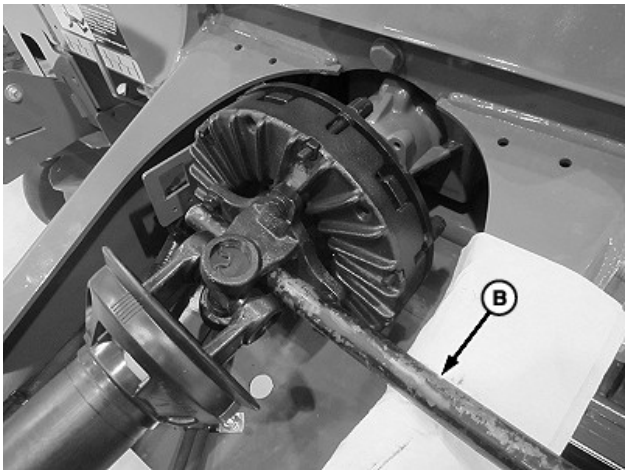

E83439—UN—12JUN17

A—Socket
B—Bar

6. Put a 35 mm (1-3/8 in) socket (A) and wrench with a long handle on the output shaft of the gear case. Extend the handle, if necessary, to contact the baler axle or ground to keep the wrench from rotating as shown.
7. Insert bar (B) between the yoke and the U-joint as shown.
8. Slip the clutch.
9. Remove the socket (A) and the bar (B).
10. Adjust the slip clutch. (See Adjust Main PTO Driveline Slip Clutch in this section.)
11. Unlock and lower the gate.

DP99999,0000E33-19-27SEP17

MegaWide is a trademark of Deere & Company

Check Pickup Slip Clutch Torque (MegaWide™ Plus)

For beginning of season service, ensure that slip clutch is free to slip. Do not need to check slip clutch torque values.

NOTE: Excessive slip clutch slipping can be caused by improper pickup height, gauge wheel, or float spring adjustments.

Clutch must slip within specifications when slipped at the gear case output hex shaft. As the clutch wears, it can gradually transmit less power due to slipping, and feeding performance can be unsatisfactory.

Specification

Clutch Slip. . . . . 290—420 N·m (214—310 lb.-ft.)

TS698—UN—21SEP89

CAUTION: Ensure that gate is locked. If gate is raised and not locked while performing this procedure, the gate could close suddenly causing injury or death.

IMPORTANT: If slip clutch does not slip at 420 N·m (310 lb.-ft.), clutch is not working correctly. Replace slip clutch to avoid possible damage to pickup.

To check slip clutch torque:

1. Raise gate fully and lock gate.
2. To reduce torque reading variations, tighten lower drive roll chain. (See ADJUST LOWER DRIVE ROLL CHAIN in this section.)
3. Raise pickup.
4. Disconnect PTO from tractor.

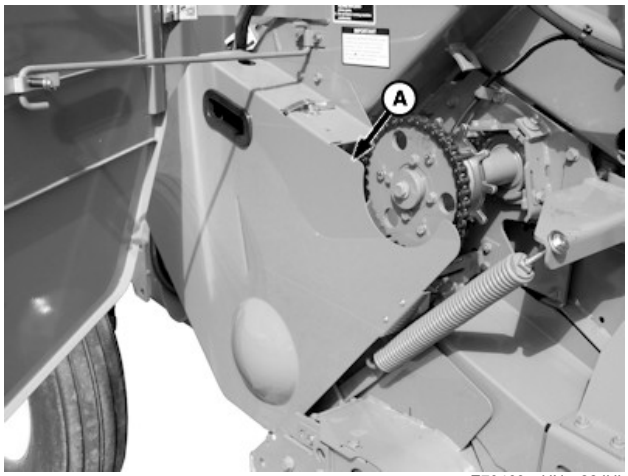

E70463—UN—22JUL13

A—Right-Hand Shield

5. Remove right-hand shield (A).

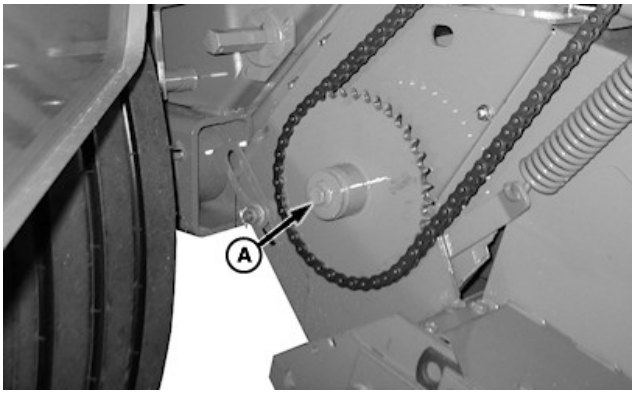

E61192—UN—22MAR12

Auger or Rotor Shaft

A—Quick-Lock or Cap Screw

6. MegaWide™ Plus Pickup; Remove cap screw (A) and washers from auger or rotor shaft.

CAUTION: Use a 1 in. drive breaker bar or weld a heavy 1-1/4 in. socket to a 10 x 76 x 914 mm bar to hold shaft in place. Smaller breaker bar or wrench can break or bend.

7. Install a tool on reel or auger or rotor shaft to prevent the shaft from rotating counterclockwise.
8. To avoid chain from jumping the sprocket while trying to slip the clutch:
   - Tighten the chain.
   - Make sure idler arm pivots freely and is spring loaded.
   - Add alignment marks (or tape) on the clutch sprocket and on the hex shaft going through the clutch. These marks can determine whether the clutch slipped or the chain jumped during each slip test.

NOTE: Rotate output shaft and slip clutch a minimum of four ratchets before recording measurements.

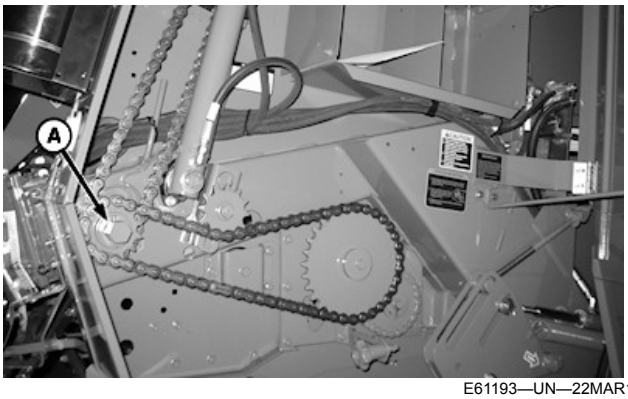

E61193—UN—22MAR12

A—Hex Output Shaft

9. To identify clutch specifications:
   - Set click-type torque wrench to 290 N·m (214 lb.-ft.)
   - Install torque wrench, with extension, on hex output shaft (A) at left-hand side of baler.
   - Turn wrench clockwise. Wrench must click before clutch slips. Repeat procedure three times.
   - Set torque wrench to 420 N·m (310 lb.-ft.)
   - Turn wrench clockwise. Clutch must slip before wrench clicks. Repeat procedure three times.
10. If clutch slips below the following specifications, replace outer housing and ratchets with springs or replace complete clutch.

Specification

Pickup Clutch (Smooth Housing)—Slip (Minimum). . . . . 290 N·m (214 lb.-ft.)

CAUTION: Never use any type of tool or wrench on shafts while tractor engine is operating. Always remove tools from shaft as soon as procedure is finished.

11. Remove tools from shafts.
12. Install right-hand shields.
13. Unlock and close gate.

DP99999,0000DA0-19-30JUN17

Check Pickup Slip Clutch Torque (MegaWide™ HC2 Feed System)

For beginning of season service, ensure that slip clutch is free to slip. Do not need to check slip clutch torque values.

NOTE: Improper pickup height, gauge wheel, or float spring adjustments can result in excessive slip clutch slipping.

Clutch must slip within specifications when slipped at the gear case output hex shaft. As the clutch wears, it can gradually transmit less power due to slipping, and feeding performance can be unsatisfactory.

Specification

Clutch Slip. . . . . 290—420 N·m (214—310 lb·ft)

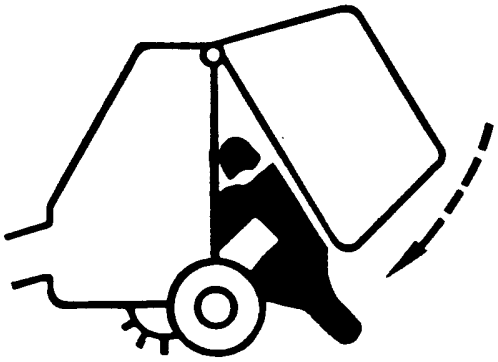

TS698—UN—21SEP89

CAUTION: Ensure that gate is locked. If gate is raised and not locked while performing this procedure, the gate could close suddenly causing injury or death.

IMPORTANT: The slip clutch should slip at 420 N·m (310 lb·ft). To avoid possible damage to the pickup, replace the slip clutch.

To check slip clutch torque:

1. Raise gate fully and the lock gate.
2. Raise the pickup.
3. Disconnect the PTO from the tractor.

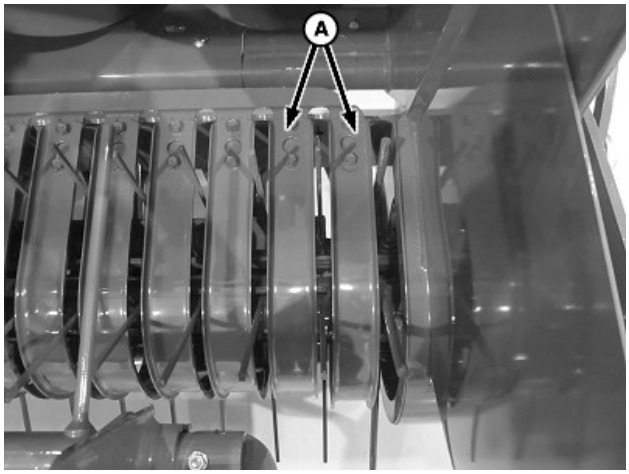

E83336—UN—06JUN17

A—Pickup Stripper

4. Remove the two left-hand side pickup strippers (A).

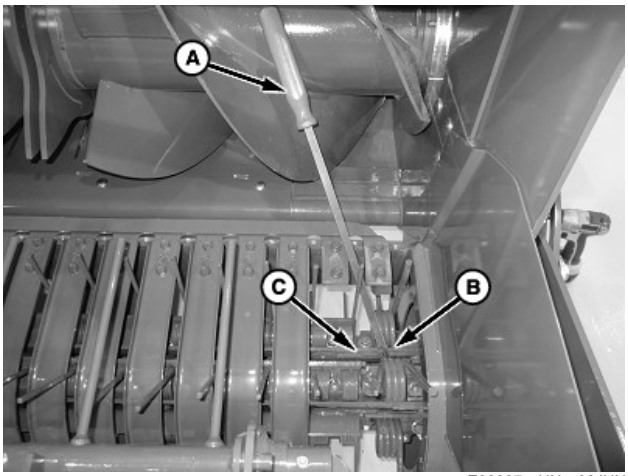

E83337—UN—06JUN17

A—Pry Bar
B—Tooth Bar
C—Center Shaft

5. To prevent the pickup from rotating, position the pry bar (A) between the tooth bar (B) and the center shaft (C).
6. To prevent the chain from jumping the sprocket while trying to slip the clutch:
   - Tighten the chain.
   - Make sure idler arm pivots freely and is spring loaded.
   - Add alignment marks (or tape) on the clutch sprocket and on the hex shaft going through the clutch. These marks can determine whether the clutch slipped or the chain jumped during each slip test.

NOTE: Rotate output shaft and slip clutch a minimum of four ratchets before recording measurements.

E61193—UN—22MAR12

A—Hex Output Shaft

7. To identify clutch specifications:
   - Set click-type torque wrench to 290 N·m (214 lb·ft)
   - Install torque wrench, with extension, on the hex output shaft (A) at the left-hand side of the baler.
   - Turn wrench clockwise. Wrench must click before clutch slips. Repeat procedure three times.
   - Set torque wrench to 420 N·m (310 lb·ft)
   - Turn wrench clockwise. Clutch must slip before wrench clicks. Repeat procedure three times.
8. If clutch slips below the following specifications, replace outer housing and ratchets with springs or replace complete clutch.

Specification

Pickup Clutch (Smooth Housing)—Slip (Minimum). . . . . 290 N·m (214 lb·ft)

CAUTION: Never use any type of tool or wrench on shafts while the tractor engine is operating. Always remove tools from the shaft as soon as the procedure is finished.

9. Remove tools from shafts.

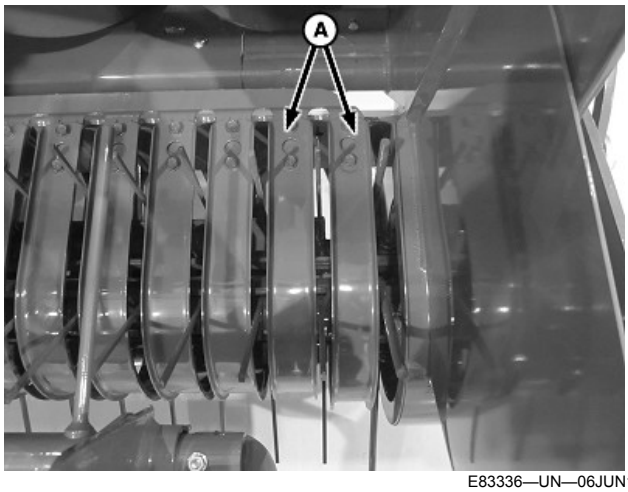

E83336—UN—06JUN17

A—Stripper (as required)

10. Remove tools from the pickup and reinstall the strippers (A).
11. Install the shields.
12. Unlock and close the gate and close the doors.

SF04007,0000EEF-19-08NOV17

Adjust PTO and Drive Roll Slip Clutch Alert Sensors (MegaWide™ Plus Pickup)

IMPORTANT: The following procedure is not used on a 460M or 560M Baler with a regular pickup.

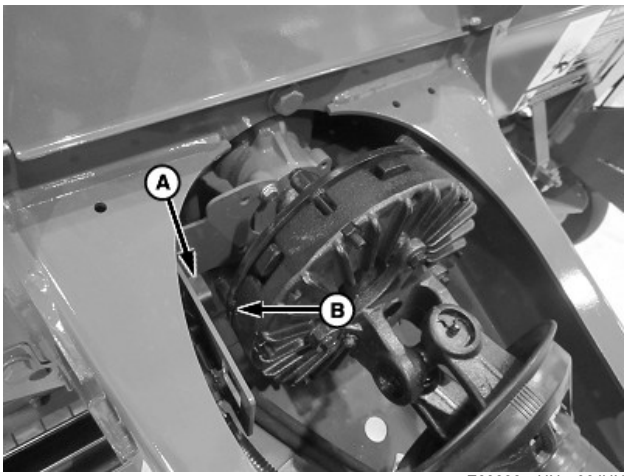

E83338—UN—06JUN17

PTO Sensor

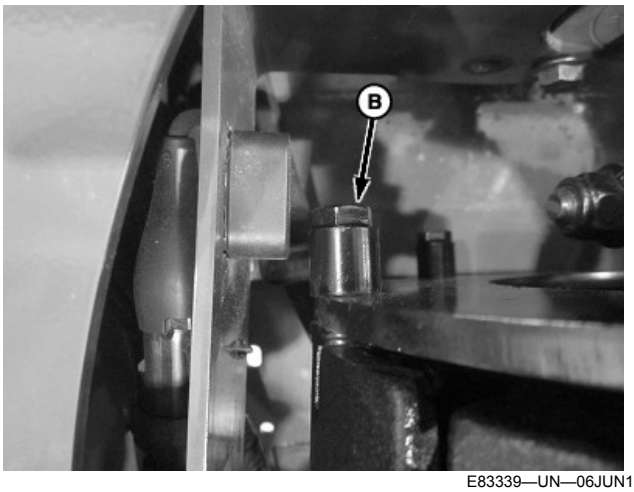

E83339—UN—06JUN17

A—PTO Sensor
B—PTO Clutch Bolt

1. Clearance between sensor (A) and clutch bolts (B) must be within specification. A feeler gauge or washer of the same thickness can be useful in adjusting setting.

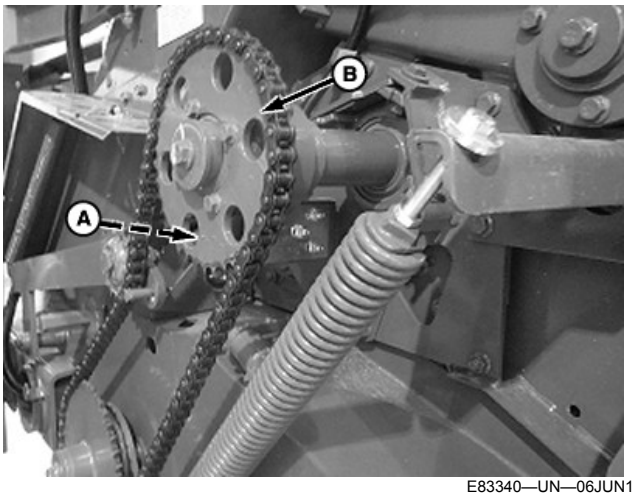

E83340—UN—06JUN17

Lower Drive Roll (Pickup) Sprocket

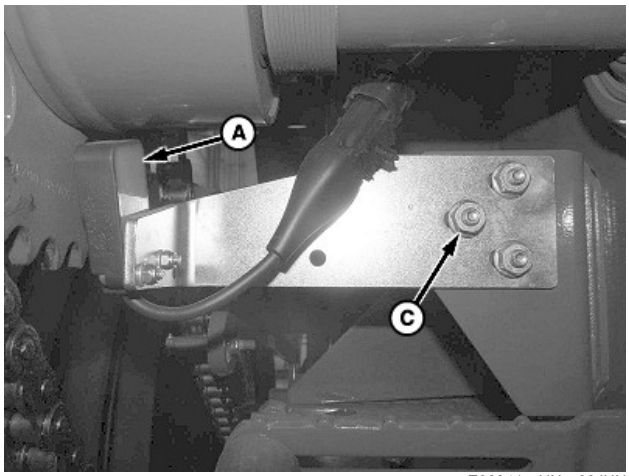

E83341—UN—06JUN17

Sensor Mounting Bracket

A—Sensor
B—Lower Roll Drive Sprocket
C—Carriage Bolt and Nut (3 used)

2. Clearance between sensor (A) and sprocket (B) must be within specification. Adjust the distance between the face of the sensor and the sprocket by loosening carriage bolts (C) and moving the mounting bracket.

Specification

Sensor—Clearance. . . . . 3—8 mm (0.12—0.32 in)

Verify Operation of Sensors

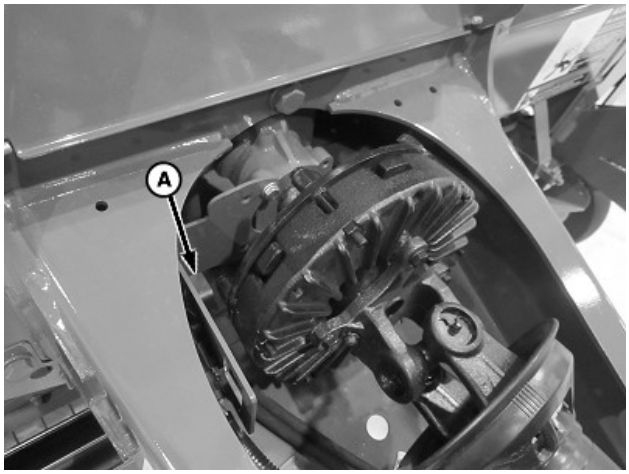

E83401—UN—06JUN17

PTO Speed Sensor

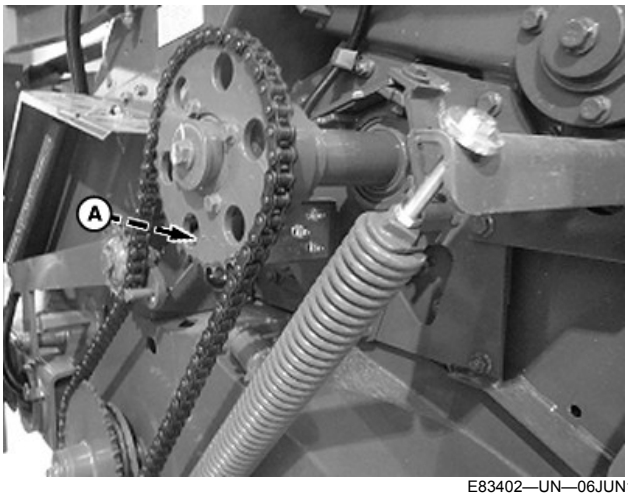

E83402—UN—06JUN17
Lower Drive Roll (Pickup) Speed Sensor

A—Sensor

Verify proper operation and adjustment of the PTO and pickup drive speed sensors (A) using channel 016 and channel 017 on the monitor-controller.

1. Start the tractor and operate the engine at a low idle. Engage the PTO.
2. Press and hold the COUNTER key while turning the monitor-controller ON.
3. Continue to hold the COUNTER key and press the PLUS key until CH016 appears in the digital display.

NOTE: See the decal on the left-hand side of the PTO cover for the correct PTO speed.

4. Release the COUNTER key and the PTO speed is displayed. The speed readout must be stable and not vary by more than 5 rpm. The nominal speed is either 540 or 1000, depending on which option is installed on the machine.
5. Press and hold the COUNTER key and press the PLUS key until CH017 appears in the digital display.
6. Release the COUNTER key and the pickup drive speed is displayed. The speed readout must be stable and not vary by more than 5 rpm. The nominal speed is 170 for machines with the MegaWide™ Plus pickup.

Turning PTO Speed Sensor ON and OFF

To turn the PTO speed sensor ON or OFF, go to the setup channel 204 in the monitor-controller. (See SLIP CLUTCH ALERT PTO SPEED SENSOR [CHANNEL 204] [TURNING ON AND OFF] in Operating the Baler section.)

- The slip clutch alert feature can be turned OFF by changing the setting to 0.
- Turn the sensor ON by changing the setting to 540 or 1000 (depending on the PTO option installed).

Turning Lower Drive Roll (Pickup) Speed Sensor ON and OFF

To turn the pickup speed sensor ON or OFF, go to the setup channel 205 in the monitor-controller. (See SLIP CLUTCH ALERT PICKUP SPEED SENSOR [CHANNEL 205] [TURNING ON AND OFF] in Operating the Baler section.)

- The slip clutch alert feature for the pickup speed sensor can be turned OFF by changing the setting to 0.
- Turn the sensor ON by changing the setting to 170.
- Turning OFF the pickup sensor on channel 205 and turning ON the PTO sensor on channel 204 still allows automatic speed compensation during the twine or net application cycle.

Adjusting PTO Sensor

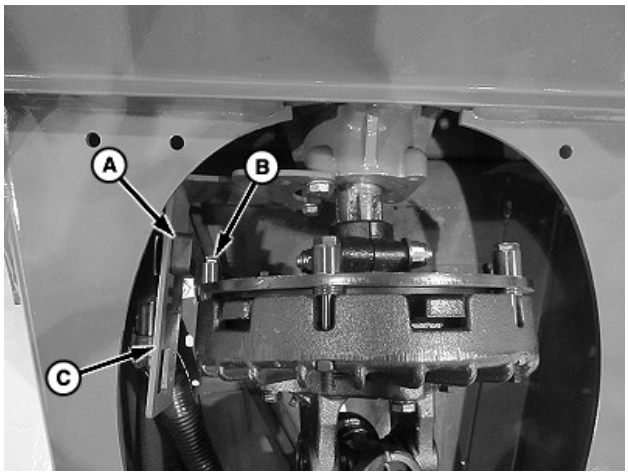

E83403—UN—06JUN17
PTO Speed Sensor Mounting Bracket

A—Sensor
B—Clutch Bolt
C—Bracket

Adjust the face of the sensor (A) to the clutch bolt (B) distance specified by bending the bracket (C) accordingly.

MegaWide is a trademark of Deere & Company

Adjusting Lower Drive (Pickup) Roll Sensor

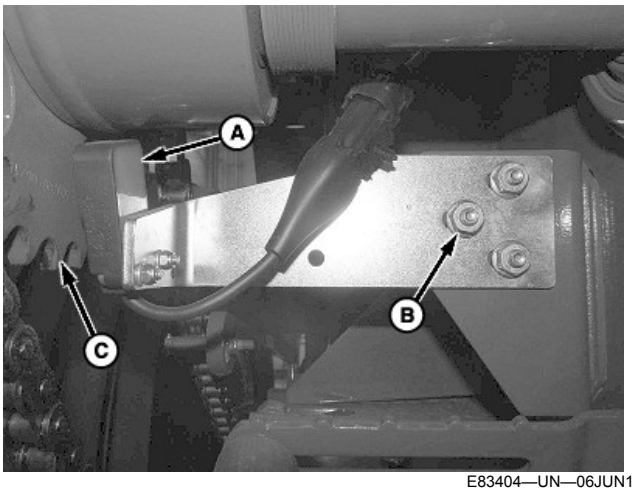

E83404—UN—06JUN17

Lower Drive Roll Speed Sensor Bracket

A—Lower Drive Roll Sensor
B—Sprocket
C—Carriage Bolt and Nut (3 used)

Adjust the distance between the face of the sensor (A) and the sprocket (B) by loosening carriage bolts (C) and moving the mounting bracket.

DP99999,0000DB3-19-26OCT17

Adjust PTO and Main Rotor Slip Clutch Alert Sensors (MegaWide™ HC2 Feed System Only)

IMPORTANT: The following procedure is not used on a 460M or 560M Baler with a regular pickup.

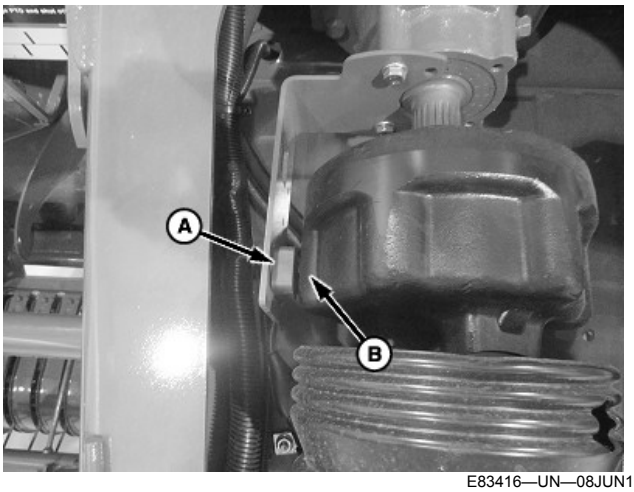

E83416—UN—08JUN17

PTO Speed Sensor

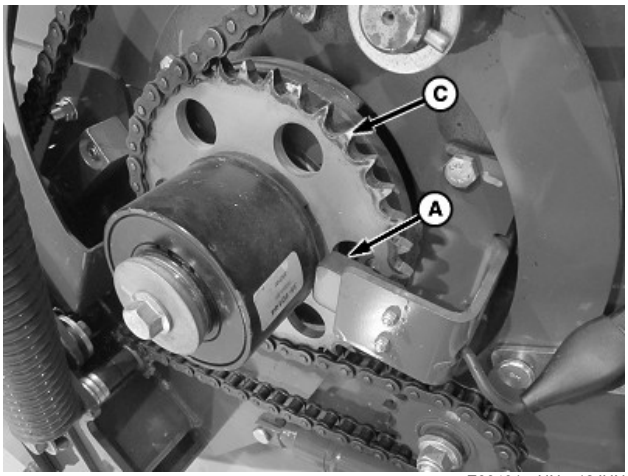

E83491—UN—12JUN17

Pickup Main Rotor Speed Sensor

A—Speed Sensor
B—PTO Clutch Fins
C—Tone Wheel

NOTE: The sensor face must be aligned with the holes in the tone wheel for proper operation. Increasing the gap between the sensor face and the tone wheel can help improve sensor performance.

Clearance between the speed sensor (A) and the PTO clutch fins (B) or the main rotor tone wheel (C) must be within specification. A feeler gauge or washer of the same thickness can be useful in adjusting setting.

Specification	
Sensor—Clearance	3—8 mm (0.12 —0.32 in)

Verify Operation of Sensors

Verify operation and adjustment of the speed sensors using channel 016 on the monitor-controller for PTO speed and channel 017 for main rotor drive speed.

1. Start the tractor and operate the engine at a low idle. Engage the PTO.
2. Press and hold the COUNTER key while turning the monitor-controller ON.
3. Continue to hold the COUNTER key and press the PLUS key until CH016 appears in the digital display.
4. Release the COUNTER key and the PTO speed is displayed. The speed readout must be stable and not vary by more than 5 rpm.
5. Press and hold the COUNTER key and press the PLUS key until CH017 appears in the digital display.
6. Release the COUNTER key and the main rotor drive speed is displayed. The speed readout must be stable and not vary by more than 5 rpm. The nominal speed is 170 rpm.

Adjusting PTO Sensor

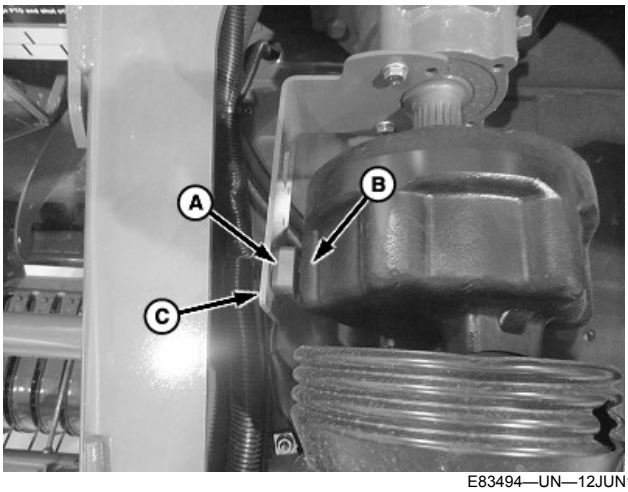

E83494—UN—12JUN17

PTO Speed Sensor

A—Sensor
B—Clutch Fins
C—Bracket

Bend bracket (C) as necessary to obtain the specified clearance between the face of the sensor (A) and the clutch fins (B).

Specification

—Clearance. . . . . 3—8 mm (0.12—0.32 in)

Adjusting Pickup Main Rotor Sensor

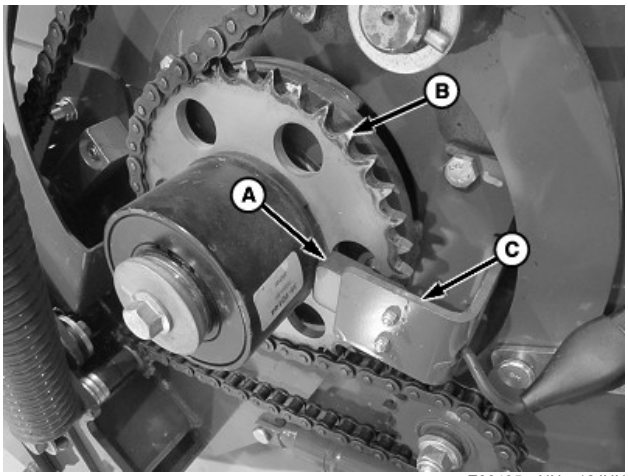

E83495—UN—12JUN17

Main Rotor Speed Sensor

A—Sensor
B—Sprocket
C—Bracket

Bend bracket (C) as necessary to obtain the specified clearance between the face of the sensor (A) and the sprocket (B).

Specification

—Clearance. . . . . 3—8 mm (0.12—0.32 in)

DP99999,0000DB4-19-27NOV17

Adjust Lower Gate Roll Scraper (Regular Pickup Only)

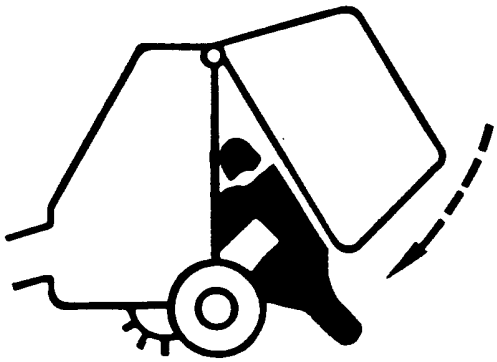

TS698—UN—21SEP89

CAUTION: To avoid injury or death caused by unexpected lowering of the gate, engage gate lock before working on, around, or under gate in raised position.

1. Open gate to convenient height and lock with gate lock valve.
2. Move tractor selector valve to raise belt tension arm to highest position. Shut off tractor.

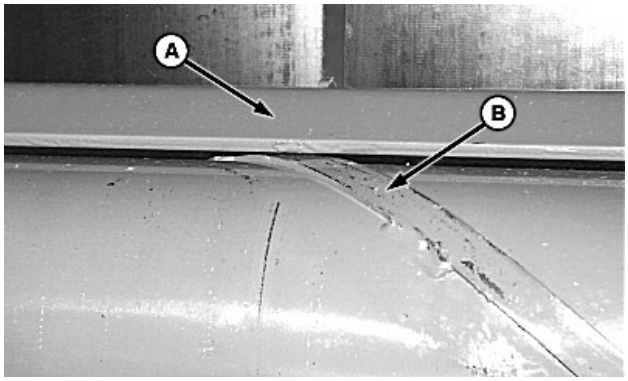

E48401—UN—17JUL00

Spiral-To-Scraper Clearance Shown

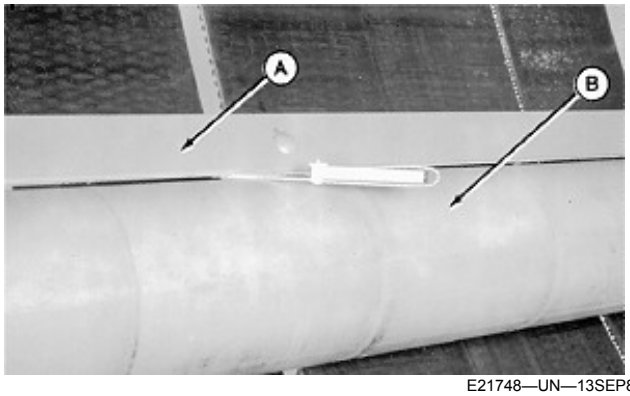

E21748—UN—13SEP88

Roll-To-Scraper Clearance Shown

A—Scraper
B—Gate Roll

3. Loosen mounting lock nut on one side of scraper (A) at a time.
4. Using feeler gauge, adjust scraper (A) on one side at a time until roll-to-scraper clearance at the spiral straps or roll is within specifications at tightest points. Tighten lock nuts.

Specification

Spiral-to-Scraper—Clearance. . . . . 2.5—5.5 mm (3/32—7/32 in.)

Specification

Roll-to-Scraper—Clearance. . . . . 2 ± 1 mm (0.080 ± 0.040 in.)

5. Rotate roll (B) to make sure that scraper does not hit strap or roll at any point when roll is rotated.
6. Lower gate.
7. Engage PTO and tension belts. Listen for roll-to-scraper contact.

DP99999,0000E25-19-15SEP17

Adjust Starter Roll Scraper (If Equipped)

TS268—UN—23AUG88

CAUTION: Be careful when working around the starter roll scraper. The knife is sharp and can cause serious injury.

To avoid pinching fingers, rotate the starter roll in direction shown.

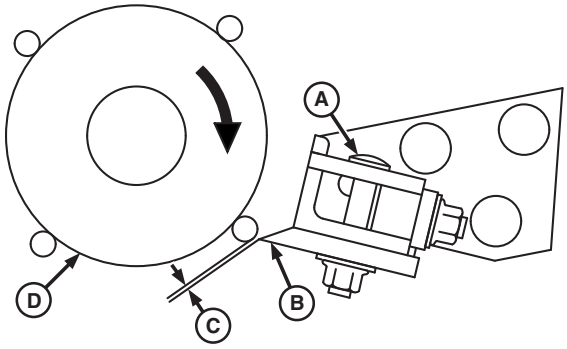

E51108—UN—17JAN02

A—Cap Screws
B—Scraper Bar
C—Clearance
D—Starter Roll

1. Clear area of all debris between knife, scraper bar (B), and starter roll (D).
2. Loosen cap screws (A).
3. Clearance (C) must be within specifications.

Specification

Scraper Bar-to-Starter Roll—Clearance. . . . . 0.5—1.0 mm (0.020—0.040 in)

4. Tighten cap screws (A).
5. To check the clearance at all the bars, manually rotate the starter roll (D). Readjust if necessary.

SF04007,00010B8-19-21NOV17

Adjust Idler Roll Scrapers (If Equipped)

NOTE: Spirals must be free of weld splatter and surface damage before performing adjustment.

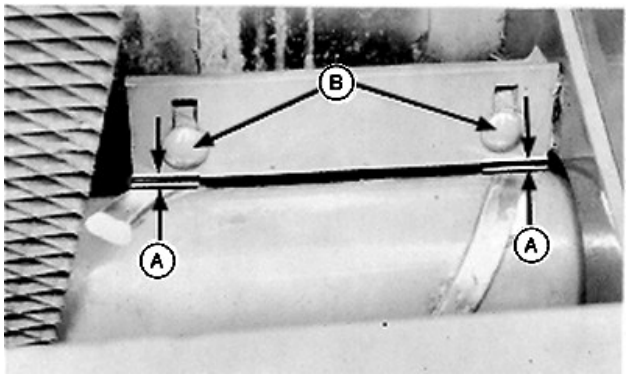

E37398—UN—24JUN99

A—Clearance
B—Round-Head Bolts

1. Loosen nuts on round-head bolts (B).
2. Adjust right and left-hand scrapers to obtain clearance (A) between scraper and spirals on roll to within specifications. Tighten nuts on round-head bolts (B).

Specification

Scraper-to-Spirals on Roll—Clearance. . . . . 0.5—2.3 mm (0.020—0.091 in.)

3. Rotate roll manually and check clearance. If clearance exceeds specifications, check that roll spirals are flat to roll.
4. With gate closed and belts tensioned, engage PTO. There must be no contact between scrapers and spirals. If necessary, adjust scraper clearance.

PP98408,00010C3-19-11FEB13

Adjust Auger Scrapers (MegaWide™ Plus Pickup)

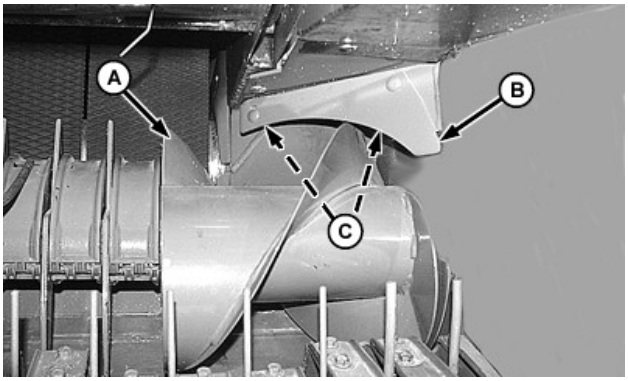

E48190—UN—03AUG00

Left-Hand Side Shown

A—Auger
B—Scraper
C—Nuts

1. Loosen nuts (C).
2. Position scraper (B) to auger (A) according to specifications at closest point. Rotate auger to check clearance.

Specification

Scraper-to-Auger—Clearance (Minimum). . . . . 1 mm (1/32 in.)

3. Tighten nuts.
4. Repeat procedure on opposite side.

PP98408,00010C4-19-11FEB13

Check and Adjust Clearance Between Cleaning Auger and Staggered Belt Roll (If Equipped)

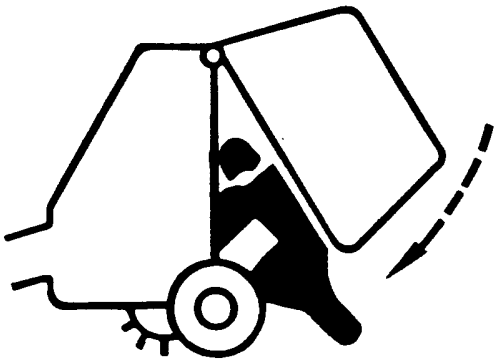

TS698—UN—21SEP89

CAUTION: The gate can close suddenly and cause serious injury or death. Make sure that the gate is locked when in the raised position.

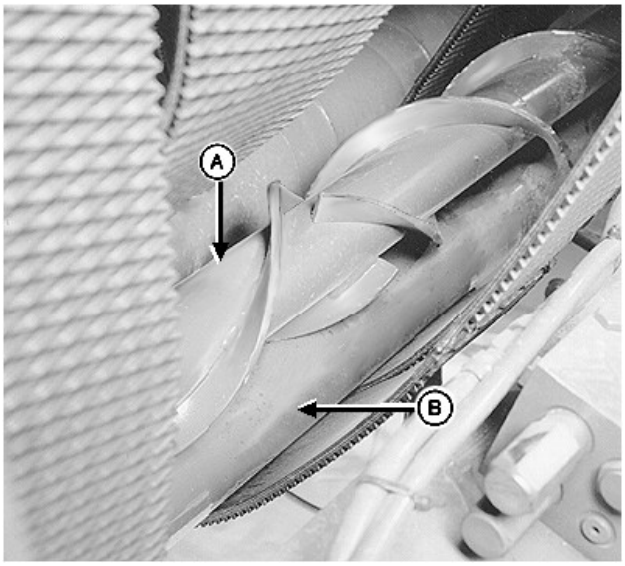

E41086—UN—04OCT96

A—Cleaning Auger
B—Staggered Belt Roll

NOTE: Shield removed for illustration purposes.

The cleaning auger (A) must operate close to the staggered belt roll (B) and belts to function correctly.

Clearance between the auger flighting and outside diameter of the staggered belt roll must be within specifications with gate fully closed and belts tensioned.

Specification

Auger Flighting-to-Staggered Belt Roll OD—Clearance. . . . . 1—3 mm (1/32—1/8 in)

Check Clearance

1. Start tractor engine.
2. Raise gate, shut OFF tractor engine, and remove key.
3. Lock the gate.
4. Disconnect cleaning auger drive chain.
5. Remove any crop or mud buildup on roll.

IMPORTANT: To reduce the risk of fire, verify that the cleaning auger flighting moves crop toward the center of baler when top of auger rotates forward.

6. Check clearance with a feeler gauge at both ends and in the middle of the baler. Rotate the auger and check for eccentricity.
7. Verify that the cleaning auger flighting moves crop toward the center of baler when top of auger rotates forward.
8. Reconnect cleaning auger chain. (See ADJUST LOWER DRIVE ROLL CHAIN in this section.)

Adjust Clearance

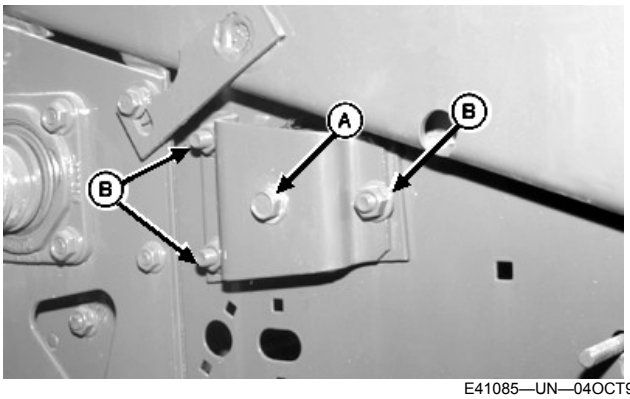

E41085—UN—04OCT96

Right-Hand Side Shown

A—Roll Shaft Cap Screw
B—Roll Bracket Nuts

1. Remove cleaning auger chain.
2. Loosen cap screw (A) and nuts (B) on the right-hand and left-hand side of the baler.
3. Place a 2 mm (0.078 in) shim between the flighting and the outside diameter of the belt roll at both ends.

IMPORTANT: When tightening mounting hardware, make sure that the roll rotates freely with a minimum gap of 1 mm (0.039 in) between the roll and the hole in the side sheet.

4. Hold the roll firmly against shim and tighten all mounting hardware.
5. Remove shims used in previous step.
6. Start the tractor engine and close the gate. Shut OFF the tractor engine and remove key.
7. Manually rotate the auger. Check clearance between roll and auger flighting near both side sheets and at a center location. Clearance must be within specifications. If not, reposition the roller or check straightness of cleaning auger.

Specification

Auger Flighting-to-Staggered
Belt Roll OD—Clearance. . . . . 1—3 mm (1/32—1/8 in)

CAUTION: To reduce the risk of fire, verify that the cleaning auger flighting moves crop toward center of baler when top of auger rotates forward.

8. Verify that the cleaning auger flighting moves crop toward center of baler when top of auger rotates forward.
9. Reconnect cleaning auger chain. Adjust chain idler. (See ADJUST LOWER DRIVE ROLL CHAIN in this section.)

DP99999,0000D27-19-27APR17

Adjust Take-Up Arm Compression Springs

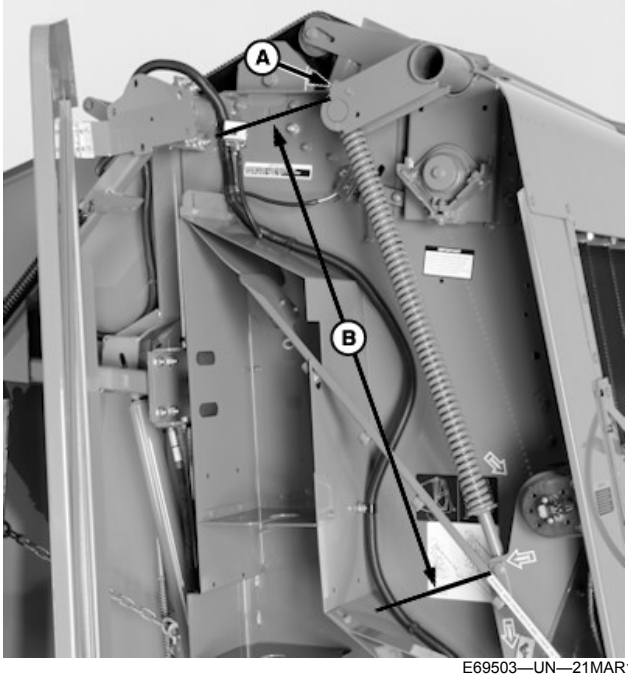

E69503—UN—21MAR13

A—Stop Nuts
B—Dimension

If springs have been replaced or stop nuts have been removed, adjust springs as follows:

1. With empty baler, close the gate and lower the tension arm. Remove any wrappage or buildup on rolls.
2. If forming belts are installed, go to step 4.
3. If installing springs on baler without forming belts installed, adjust stop nuts (A) until dimension (B) is within specifications.

Specification

Take-Up Arm Compression
Spring—Length. . . . . 998 ± 1.5 mm (39.3 ± 0.04 in.)

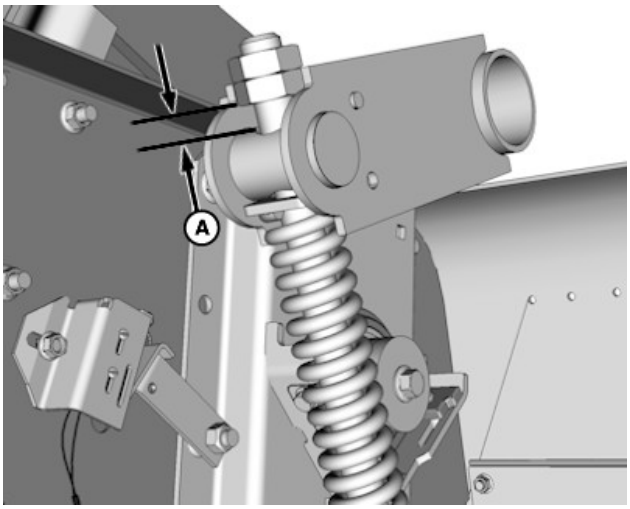

E69504—UN—21MAR13

A—Gap

4. With forming belts installed, adjust stop nuts until gap (A) between nut and pivot is within specifications.

Specification

Nut-to-Pivot—Gap. . . . . 8—12 mm (0.315—0.472 in.)

5. Engage tractor PTO. Raise and lower the tension arm.
6. Check gap (A) on the right and left-hand springs. Adjust if necessary.

DP99999,0000E01-19-22AUG17

Adjust Twine Indicator Retaining Strap

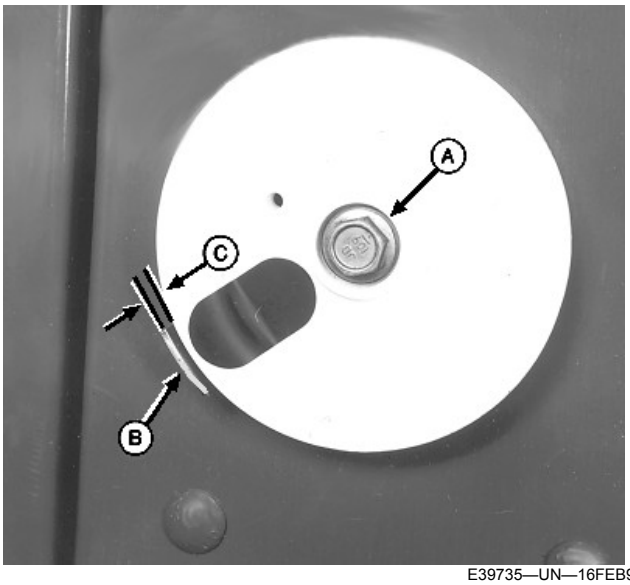

E39735—UN—16FEB96

Right-Hand Side Shown

A—Cap Screw
B—Retaining Strap
C—Distance

1. Loosen cap screw (A).
2. Position retaining strap (B) as follows:
   - Right-hand side of baler; eight o'clock position
   - Left-hand side of baler; four o'clock position
3. Adjust dimension (C) between strap and twine indicator wheel according to specifications.

Specification

Strap-to-Twine Indicator Wheel—Distance. . . . . 0.4—0.8 mm (0.016—0.031 in.)

4. Tighten cap screw (A).
5. Twine indicator wheel must spin freely after adjustment.

PP98408,00010C8-19-11FEB13

Adjust Twine Guide Arm Spring

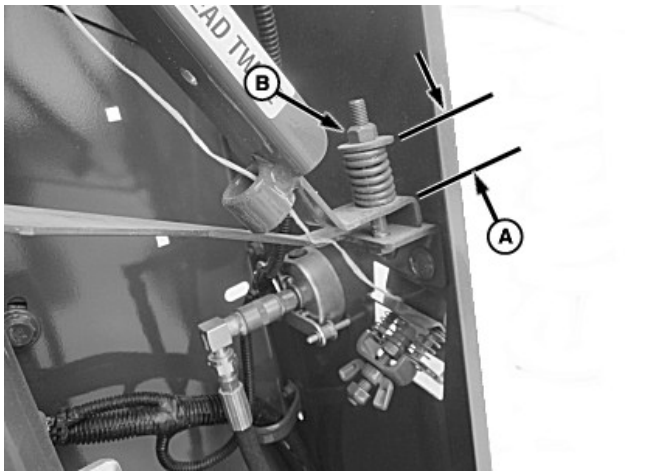

E83994—UN—01AUG17

A—Length, 28—32 mm
B—Flange Nut

1. The twine guide arm spring length (A) must be set to 28—32 mm (1.10—1.25 in) to provide proper tension on the twine arm.
2. Increase or decrease the spring length by loosening or tightening flange nut (B).

DP99999,0000DC4-19-01AUG17

Adjust Twine Cutter Tension

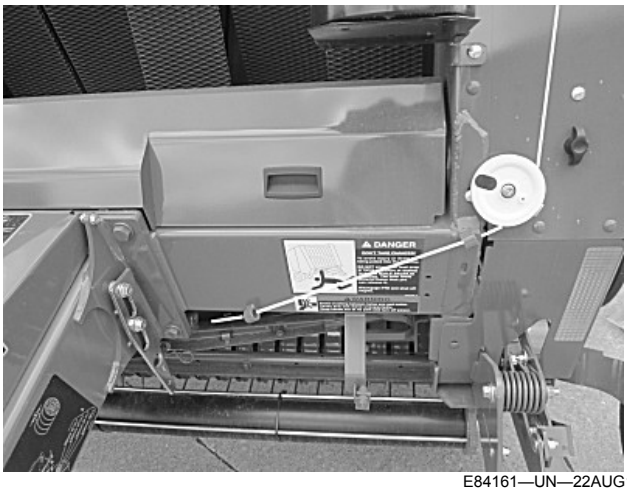

E84161—UN—22AUG17

1. Turn tractor ignition key to the ON position. Do not start the tractor engine. To turn the monitor-controller ON, press the ON-OFF key.
2. To select the TWINE mode, press and briefly hold the TWINE or NET key.
3. Using the monitor-controller EXTEND key, move the twine arms behind the twine cutter.
4. Turn the monitor-controller OFF. Turn the tractor ignition key to the OFF position and remove the key.

CAUTION: Twine arms can move unexpectedly. Avoid crushing, keep hands out of the twine arm path. Turn off power BEFORE servicing or adjusting twine arms or twine cutter mechanism.

Stay out of the path of twine arms at all times when power to twine arms is ON.

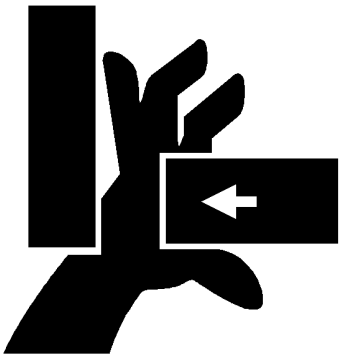

E47598—UN—07JAN00

TS268—UN—23AUG88

CAUTION: Twine knife has two cutting edges. Be careful when working around the knife. It is sharp.

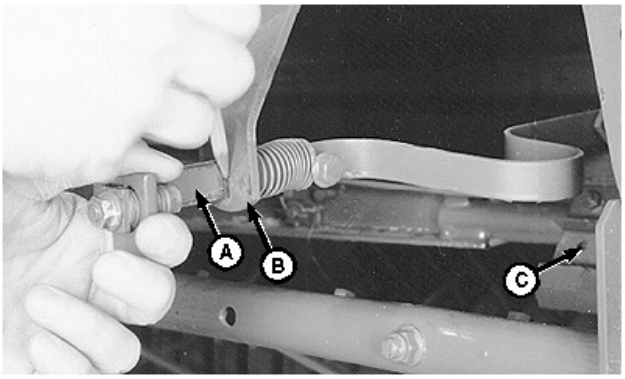

E39276—UN—19JUN96

A—Cutter Strap
B—Support
C—Knife

5. Pull cutter strap (A) gently forward until knife (C) contacts the hex anvil. Remove slack, but do not deform the cutter strap.
6. Mark along the cutter strap (A) at support (B), as shown.

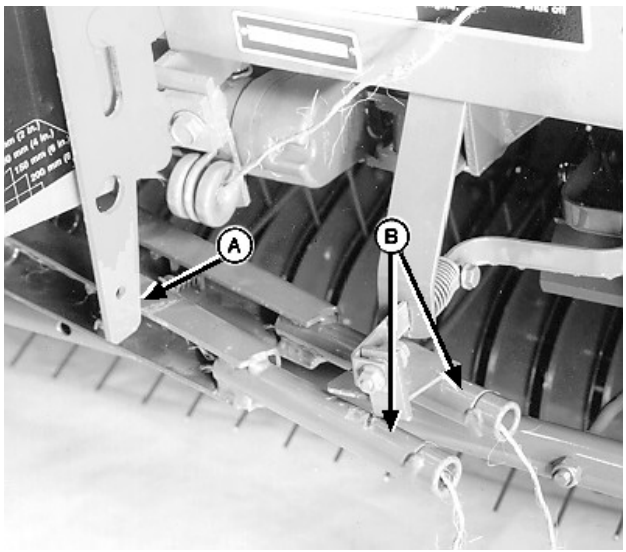

E39771—UN—21FEB96

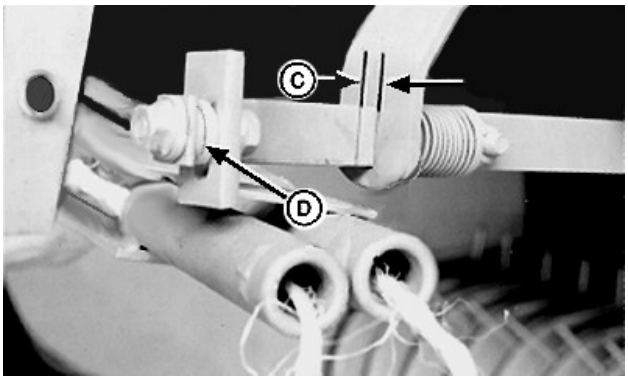

E39773—UN—29JUN96

A—Twine Arm Stop
B—Twine Arms
C—Dimension
D—Washers

7. Make sure that the twine arm stop (A) is in the down position.
8. Turn the tractor ignition key to the ON position. Ensure that the monitor-controller is in the TWINE mode.
9. To turn the monitor-controller ON, press the ON-OFF key.
10. Cycle the twine arms (B) to the home position using the monitor-controller WRAP key.
11. Turn the monitor-controller OFF. Turn the tractor ignition key to the OFF position and remove the key.
12. The distance (C) between the mark on the cutter strap and the strap support must be within specifications.

Specification

Cutter Strap-to-Strap
Support—Distance. . . . . 5—7 mm
(3/16—9/32 in)

- To decrease distance (C), move washers (D) from the front of strap to rear of strap.
- To increase distance, move washers from rear of strap to front of strap.

If twine cutter adjustment cannot be made by moving washers on the cutter strap, see Adjust Electric Twine Actuator in this section.

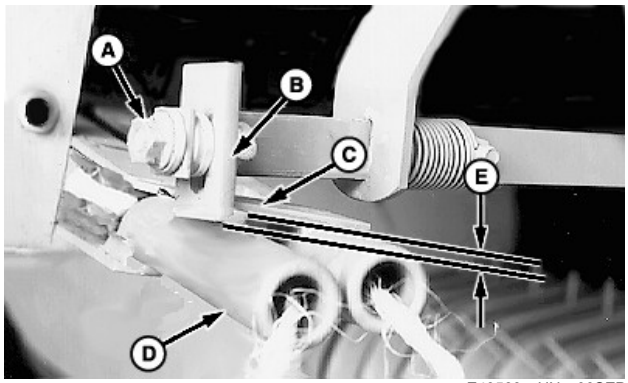

E40583—UN—06SEP00

A—Nut
B—Tab
C—Strap
D—Twine Arm
E—Dimension

13. If washers have been moved, check overlap dimension (E) between the bottom edge of tab (B) and the bottom edge of strap (C). Dimension (E) must be within specifications.

Specification

Bottom Edge of Tab-to-Bottom
Edge of Strap—Overlap
Distance. . . . . 2—4 mm
(3/32—5/32 in)

To check overlap dimension:

a. Turn the tractor ignition key to the ON position. To turn the monitor-controller ON, press the ON-OFF key .
b. Using the monitor-controller RETRACT key, move the twine arms until twine arm (D) lightly contacts tab (B) and strap (C).
c. Turn the monitor-controller OFF. Turn the tractor ignition key to the OFF position and remove the key.
d. Loosen nut (A) and adjust tab (B) to obtain specification (E) between the bottom edge of tab (B) and the bottom side of the contact strap (C). Keep tab (B) vertical and tighten nut (A).
e. Turn the tractor ignition key to the ON position. Turn the monitor-controller ON.
f. Move the twine arms forward using the monitor-controller RETRACT key.
g. Turn the monitor-controller OFF. Turn the tractor ignition key to the OFF position and remove the key.
h. Check overlap dimension (E). The front twine arm must pass under tab (B). If necessary, adjust tab (B). Light contact between tab (B) and the front twine arm (D) is acceptable.
i. Make sure that the distance between the mark

on the cutter strap and the strap support is to specification.

DP99999,0000D28-19-27OCT17

Adjust Clearance Between Cutter Link Support and Twine Arm

IMPORTANT: Do not operate twine arms with the pickup in raised position, or damage to pickup teeth can occur.

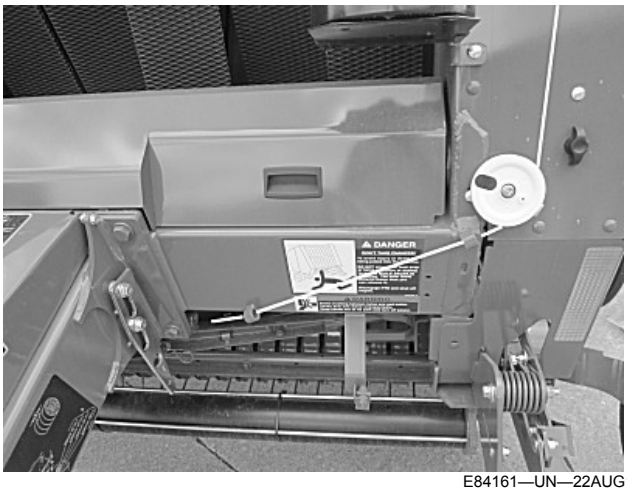

E84161—UN—22AUG17

1. Turn the tractor ignition key to the ON position. Press the ON-OFF key to turn the monitor-controller ON.
2. Press and briefly hold the TWINE or NET key to select the TWINE mode.

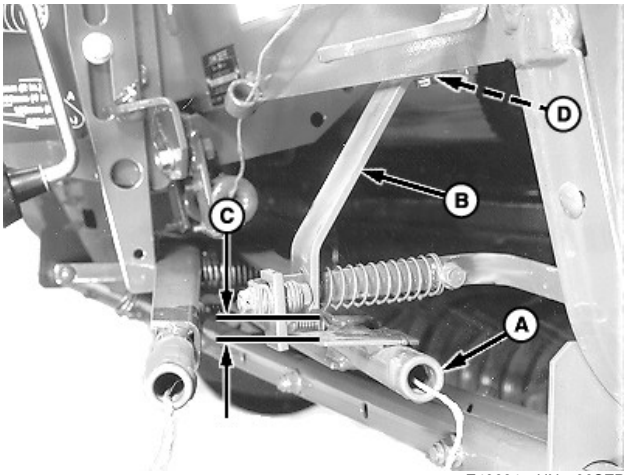

E40634—UN—06SEP00

A—Twine Arm
B—Cutter Link Support
C—Clearance
D—Shims

3. Press the EXTEND or RETRACT key to move the twine arm (A) under cutter link support (B).
4. Turn monitor-controller OFF. Turn tractor key to OFF position. Remove key.

CAUTION: Twine arms can move unexpectedly. Keep hands out of the twine arm path to avoid crushing. Turn off power BEFORE servicing or adjusting twine arms or twine cutter mechanism.

Stay out of the path of twine arms at all times when power to twine area is ON.

5. Measure clearance (C) between the bottom edge of the cutter link support (B) and the top of the twine arm strap. Clearance (C) must be within specifications.

Specification	
Bottom Edge of Cutter Link Support-to-Top of Twine Arm Strap—Clearance	6—12 mm (1/4—1/2 in)

- If clearance (C) is less than specifications, remove shims (D) between the cutter link support (B) and the crossbeam underneath. If shims do not exist, lower the twine arms relative to the cutter link support. (See ADJUST TWINE ARM-TO-STARTER ROLL, CUTTER LINK SUPPORT, AND TWINE ARM STOP in this section.)
- If clearance (C) is more than specifications, add shims (D).

6. Change shims by loosening two self-tapping screws.
7. Remove end play at the front of the cutter link support toward the center of the baler. Tighten screws.

DP99999,0000D29-19-22AUG17

Adjust Front Twine Arm

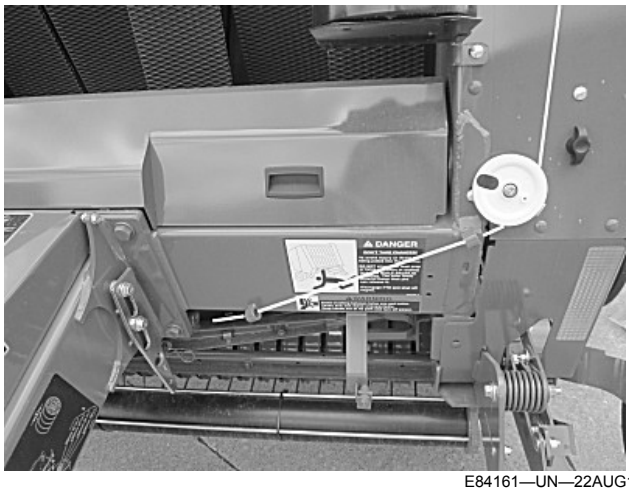

E84161—UN—22AUG17

1. Turn the tractor ignition key to the ON position. Do not start the tractor engine. Press the ON-OFF key to turn the monitor-controller ON.
2. Press and briefly hold the TWINE or NET key to select TWINE mode.

3. Move twine arms to the home position using the monitor-controller RETRACT key.
4. Turn the monitor-controller OFF. Turn the tractor ignition key to the OFF position and remove the key.

CAUTION: Twine arms can move unexpectedly when twine arm power is on. Turn off power to twine arms when standing or placing hands near twine arms.

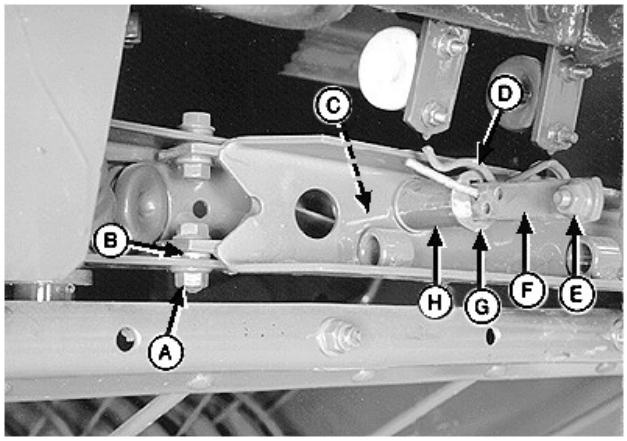

E40629—UN—02JUL96

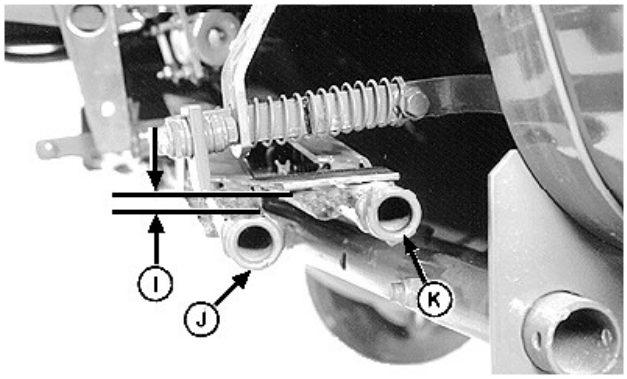

E40628—UN—01JUL96

A—Cap Screw and Nut
B—Bushing
C—Spring
D—Spring-Locking Pin
E—Cap Screw and Nut
F—Twine Spacing Strap
G—Washer
H—Spacer
I—Dimension
J—Front Twine Arm
K—Rear Twine Arm

5. Remove cap screw and nut (E), spring-locking pin (D), washer (G), spacer (H), spring (C), and twine spacing strap (F).
6. Measure dimension (I) between the tops of the twine arms (J and K). Twine arm (K) must be higher than twine arm (J) according to specifications.

Specification

Top of Front Twine Arm-to-Top of Rear Twine Arm—Distance. . . . . 4.5—7.5 mm (3/16—5/16 in)

7. To adjust, loosen nut (A) enough so the end of the twine arm can be moved manually with some resistance.
   - If dimension (I) is less than specifications, move end of the twine arm down until correct dimension is obtained.
   - If dimension is greater than specifications, move end of the twine arm up until correct dimension is obtained.
8. Tighten nut (A) to specifications.

Specification

Twine Arm Pivot Nut—Torque. . . . . 80 N·m (60 lb·ft)

9. Check dimension (I). Adjust as necessary.
10. Install the twine spacing strap, spring, spacer, washer, cap screw, and nut. Install spring-locking pin (D) in the desired hole. Adjust the twine spacing. (See SET TWINE SPACING in Operating the Baler section.)

DP99999,0000D2A-19-22AUG17

Adjust Twine Cutter to Twine Arm

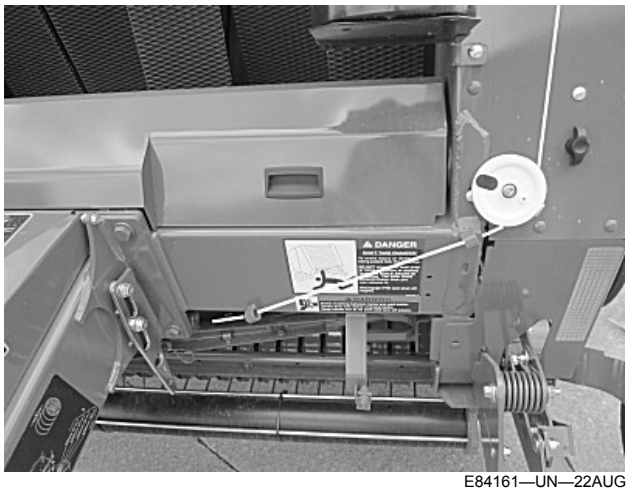

E84161—UN—22AUG17

CAUTION: Twine arms can move unexpectedly. Keep hands out of the twine arm path to avoid crushing. Turn off power BEFORE servicing or adjusting twine arms or twine cutter mechanism.

Stay out of the path of twine arms at all times when power to twine ares is ON.

CAUTION: Twine knife has two cutting edges. Be careful when working around the knife. It is sharp.

1. Remove crop material from knife and hex anvil area.

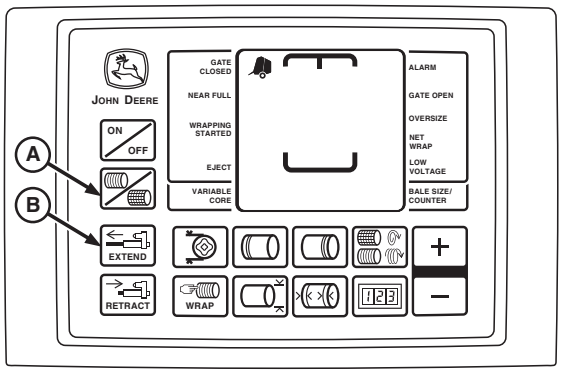

E52523—UN—02JUN08

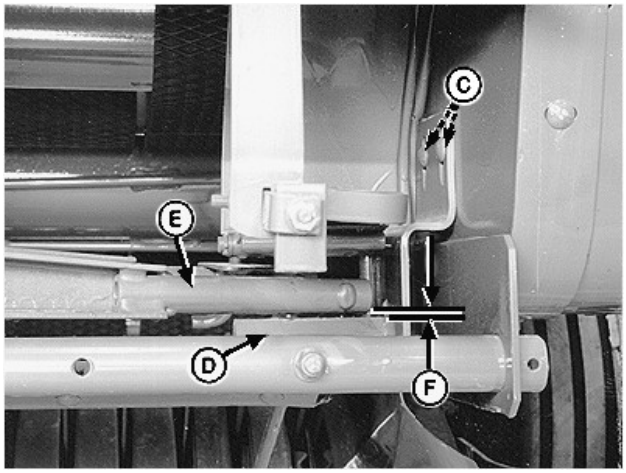

E40624—UN—29JUN96

A—Twine Symbol
B—Extend Key
C—Nuts
D—Knife Hex Anvil
E—Twine Arm Tube
F—Clearance

2. Turn the tractor ignition key to the ON position. Do not start the tractor engine. Press the ON-OFF key to turn the monitor-controller ON.
3. Press and briefly hold the TWINE or NET key to select the TWINE mode.
4. Press the monitor-controller EXTEND key (B) to move the front twine arm tube until centered over hex anvil.
5. Turn the monitor-controller OFF. Turn the tractor ignition key to the OFF position and remove the key.
6. Loosen nuts (C).
7. Adjust the twine cutter, so the clearance (F) between the knife hex anvil (D) and the front twine arm tube (E) is within specifications. The twine cutter bracket must be parallel with the bottom edge of the frame.

Specification

Knife Hex Anvil-to-Front Twine Arm Tube—Clearance. . . . . 0.5—3.5 mm (0.020—0.138 in)

8. Tighten nuts (C).
9. If the rear twine arm contacts the bottom side of the knife support and minimum clearance in step 7 is obtained, bend the twine cutter bracket so the hex anvil is parallel to the twine arm.
10. Check knife adjustment. (See CHECK AND ADJUST TWINE CUTTER KNIFE in this section.)

DP99999,0000D2B-19-22AUG17

Twine Arm Timing (560M)

CAUTION: Twine arms can move unexpectedly. Avoid crushing, keep hands out of the twine arm path. Turn off power BEFORE servicing or adjusting twine arms or twine cutter mechanism.

Stay out of the path of twine arms at all times when power to twine arms is ON.

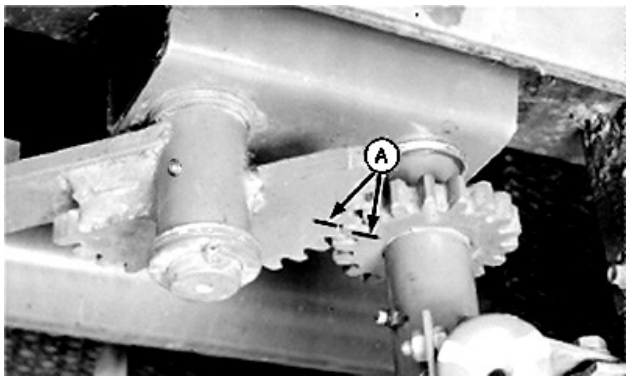

E39695—UN—31JAN96

A—Timing Mark (2 used)

When replacing or servicing the twine arm or drive gear, make sure the timing marks (A) are lined up as shown.

DP99999,0000D2C-19-26OCT17

Check and Adjust Twine Cutter Knife

CAUTION: Twine arms can move unexpectedly when twine arm power is on. Turn off power to twine arms when standing or placing hands near twine arms.

Twine knife has two sharp cutting edges. Be careful when working around the knife.

IMPORTANT: Make sure that the cutter anvil is properly adjusted before adjusting the knife. (See Adjust Twine Cutter-To-Twine Arm in this section.)

Do not operate twine arms with the pickup in the raised position, or damage to pickup teeth can occur.

NOTE: Make sure that the knife edge is straight. If not, rotate, replace, or sharpen the knife.

If the knife edge is less that 3 mm (1/8 in) from the rear of the hex flat, the knife has become too short due to sharpening. Invert or replace the knife, if necessary.

1. Remove crop material from the knife and hex anvil area.
2. Turn the tractor ignition key to the ON position. Do not start the tractor engine.

E84879—UN—09OCT17

3. Select the Settings softkey on the baler applications main page.

E64643—UN—11MAY12

4. Select the Baler Diagnostics softkey on the machine setup page.

E84890—UN—09OCT17

5. Select the Test Output softkey on the diagnostics page.

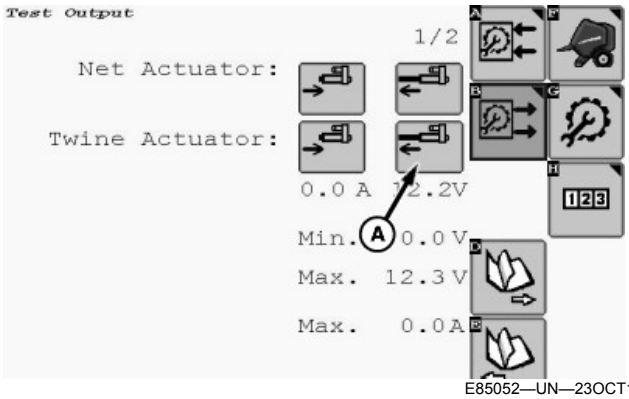

E85052—UN—23OCT17

A—Actuator Extend Softkey

6. Select the twine arm Actuator Extend softkey to move the twine arms behind the twine cutter.
7. Turn the tractor ignition key to the OFF position and remove key.

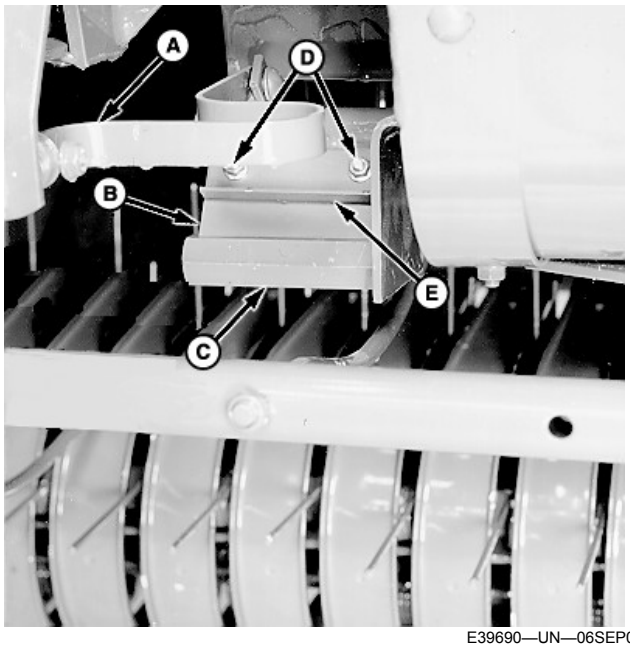

E39690—UN—06SEP00

A—Cutter Strap
B—Knife
C—Hex Anvil
D—Nuts
E—Angle

8. Pull the cutter strap (A) forward until the knife (B) contacts the hex anvil (C). If the full length of the knife does not contact the hex anvil, adjust the knife.

   To adjust the knife:

   a. Loosen nuts (D).
   b. Pull angle (E) down until the full width of knife (B) contacts the hex anvil (C). The knife edge must be near the center of the hex flat.
   c. Tighten nuts (D). Pull the cutter strap forward to make sure that the full width of the knife contacts the hex anvil. If not, repeat the adjustment procedure.
   d. Check the twine cutter to twine arm clearance. (See Adjust Twine Cutter to Twine Arm in this section.)

DP99999,0000E66-19-19OCT17

Adjust Electric Twine Actuator

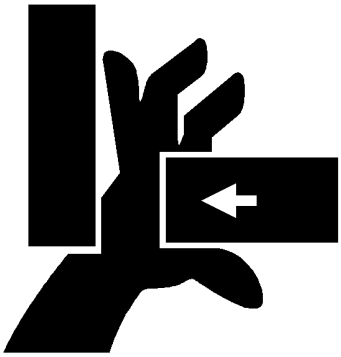

E47598—UN—07JAN00

CAUTION: Twine arms can move unexpectedly. To avoid crushing, keep hands out of the twine arm path. Turn off power to twine arms before servicing or adjusting twine arms or twine cutter mechanism.

Stay out of the path of twine arms at all times when power to twine arms is on.

NOTE: 460M balers are illustrated for the following procedure. On the 560M Baler, the actuator is installed on the right-hand side.

If the electric actuator has been removed or replaced, or the twine cutter tension adjustment cannot be made by moving washers on the cutter strap, make the following adjustment:

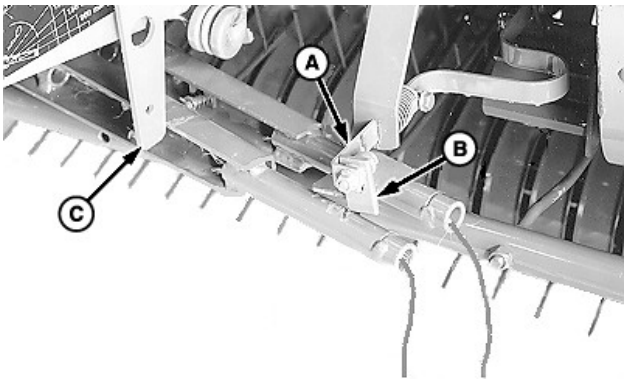

E40625—UN—06SEP00

A—Twine Cutter Strap
B—Contact Tab
C—Twine Arm Stop

1. Adjust the cutter strap (A) by putting two washers in the front of the contact tab (B) and four washers behind the contact tab (B). Make sure that the twine arm stop (C) is in the down position.
2. Turn the tractor ignition key to the ON position. Do not start the tractor engine. Turn the monitor-controller ON and press the TWINE selector switch.

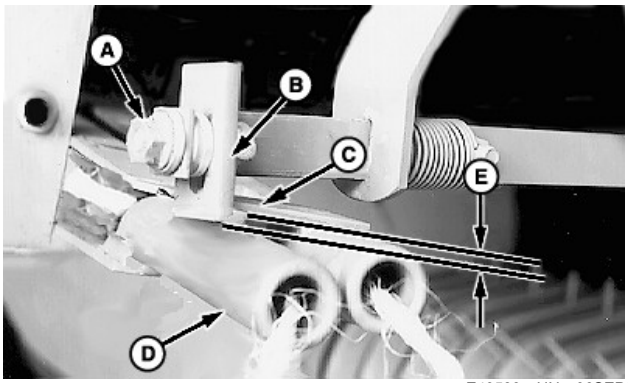

E40583—UN—06SEP00

A—Nut
B—Tab
C—Strap
D—Twine Arm
E—Dimension

3. Press the RETRACT key and move twine arms until twine arm (D) lightly contacts the tab (B) and strap (C).
4. Turn the monitor-controller OFF. Turn the tractor ignition key to the OFF position and remove the key.
5. Loosen nut (A) and adjust the tab (B) to obtain dimension (E) between the bottom edge of tab (B) and the bottom side of strap (C) according to specifications. Keep tab (B) vertical and tighten the nut (A).

Specification

Bottom Edge of Tab-to-Bottom
Side of Strap—Overlap. . . . . 2—4 mm (3/32—5/32 in)

6. Turn the tractor ignition key to the ON position. Press the TWINE selector switch to turn the monitor-controller ON.
7. Move the twine arms forward using monitor RETRACT key.
8. Turn the monitor-controller OFF. Turn the tractor ignition key to the OFF position and remove the key.
9. Check the overlap dimension (E). The front twine arm must pass under tab (B). If necessary, adjust the tab (B). Light contact between tab (B) and the front twine arm (D) is acceptable.
10. Turn the tractor ignition key to the ON position. Press the TWINE selector switch to turn the monitor-controller ON.
11. Move the twine arms behind the twine cutter using the monitor-controller EXTEND key.
12. Turn the monitor-controller OFF. Turn the tractor ignition key to the OFF position and remove the key.

TS268—UN—23AUG88

CAUTION: Be careful when working around the knife. It is sharp.

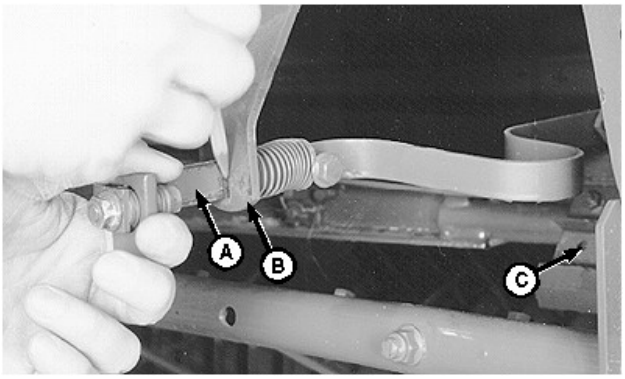

E39276—UN—19JUN96

A—Cutter Strap
B—Support
C—Knife

13. Pull cutter strap (A) gently forward until knife (C) contacts the hex anvil. Remove the slack, but do not deform the cutter strap.
14. Mark along the cutter strap (A) at support (B), as shown.

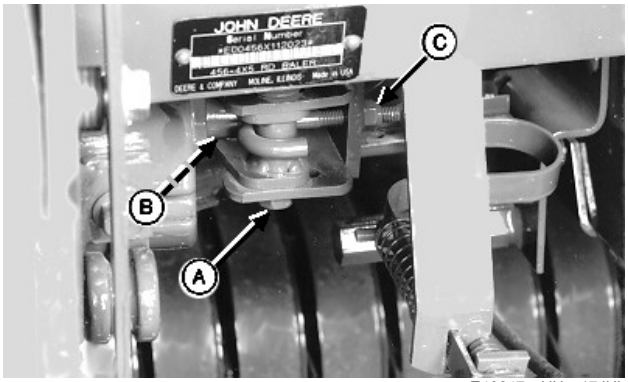

E40647—UN—17JUL96

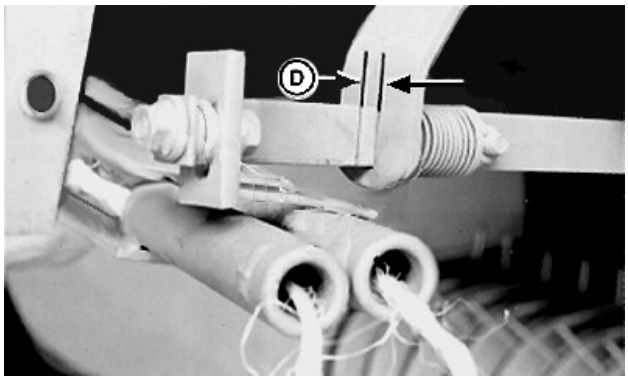

E40626—UN—29JUN96

A—Cap Screw
B—Cap Screw
C—J-Bolt Nut
D—Twine Cutter Dimension

15. Loosen cap screw (A and B).
16. Loosen J-bolt nut (C).
17. Move cap screw (A) to end of the slot toward actuator.
18. Tighten cap screws (A and B) enough so actuator pivot can be moved by hand, but with some resistance.
19. Turn the tractor key to the ON position. Press the TWINE selector switch to turn the monitor-controller ON.
20. Using the monitor-controller RETRACT key, move the twine arms to the home position.
21. Turn the monitor-controller OFF. Turn the tractor ignition key to the OFF position and remove the key.
22. Tighten J-bolt nut (C) to obtain dimension (D) between the mark on the cutter strap and the strap support according to specifications.

Specification

Dimension (D)—Distance. . . . . 5—7 mm (3/16—9/32 in)

23. Tighten cap screw (A) to specifications.

Specification

Cap Screw (A)—Torque. . . . . 140 N·m (103 lb·ft)

24. Tighten cap screw (B) to specifications.

Specification

Cap Screw (B)—Torque. . . . . 95 N·m (70 lb·ft)

25. Turn the tractor ignition key to the ON position. Press the TWINE selector switch to turn the monitor-controller ON.
26. Using the monitor-controller RETRACT key, cycle the twine arm to the home position (actuator fully retracted).

27. Turn the monitor-controller OFF. Turn the tractor ignition key to the OFF position and remove the key.
28. Check twine cutter dimension (D).
29. If dimension (D) is less than specified, loosen cap screws (A) and (B). Tighten J-bolt nut (C) until dimension (D) is obtained. Tighten cap screws (A) and (B).

    If dimension (D) is more than specified, loosen cap screws (A and B). Loosen J-bolt nut (C) until dimension (D) is obtained. Tighten cap screws (A) and (B).

DP99999,0000DC6-19-27SEP17

Adjust Twine Arm Distance from Right-Hand Side (Electric) (460M)

IMPORTANT: Do not operate twine arms with the pickup in raised position or damage to pickup teeth can occur.

The twine cutter tension must be adjusted first before performing this procedure.

NOTE: For 560M balers, the right-hand twine guide controls the twine distance from the right-hand end of the bale. The following adjustment procedure does not apply to these balers.

1. Lower the pickup.
2. Turn the tractor ignition key to the ON position. Do not start the tractor engine.
3. Turn the monitor-controller ON.
4. Move the twine arms all the way to the right-hand side of the baler using the monitor-controller EXTEND key.
5. Turn the monitor-controller OFF. Turn the tractor ignition key to the OFF position and remove the key.

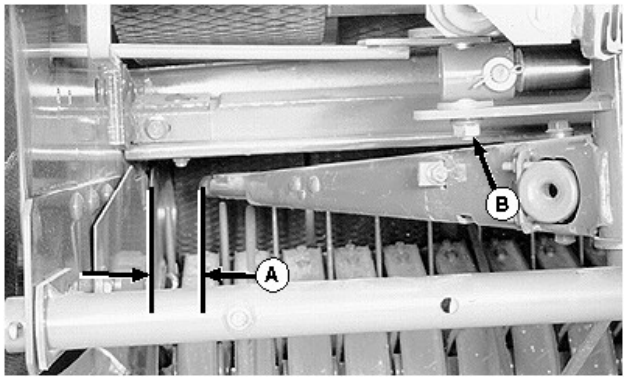

E39282—UN—19JUN96

A—Twine Arm Distance
B—Nut

6. Measure the distance (A) from the side sheet to the twine arm. The distance must be within specifications with the actuator fully extended and the twine arm end play removed toward the rear.

Specification

Distance (A)—Distance. . . . . 83—133 mm (3-1/4—5-1/4 in)

7. To adjust the distance, loosen the nut (B) enough so the twine arms can be moved by hand, but with some resistance.
8. Move the twine arms toward the side sheet as far as possible, then move the twine arms to the rear to obtain the specified distance (A).
9. Tighten nut (B) enough to hold the actuator bolt in position on the twine arm when the twine arm is moved to the home position.
10. Turn the tractor ignition key to the ON position. Do not start the tractor engine.
11. Turn the monitor-controller ON.
12. Move the twine arms to the home position (actuator fully retracted) using the monitor-controller RETRACT key.
13. Turn the monitor-controller OFF. Turn the tractor ignition key to the OFF position and remove the key.
14. Tighten nut (B) to specification with the twine arms in home position.

Specification

Actuator Nut—Torque. . . . . 95 N·m (70 lb·ft)

15. Recheck the distance (A) and repeat the adjustment as necessary.
16. Adjust the twine cutter tension. (See Adjust Twine Cutter Tension in this section.)

DP99999,0000DC8-19-04AUG17

Adjust Twine Arm-to-Starter Roll, Cutter Link Support, and Twine Arm Stop

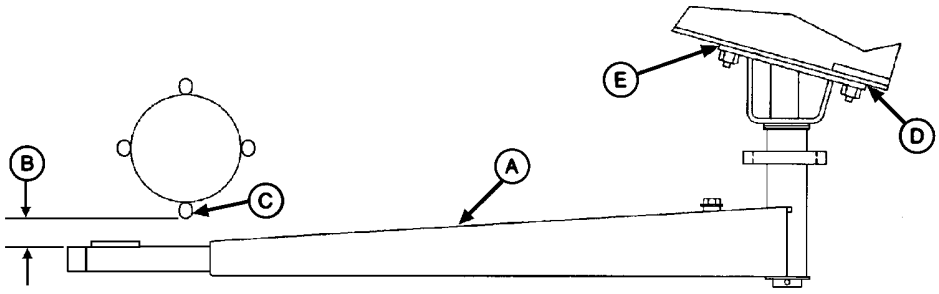

E40616—UN—16DEC97

A—Twine Arm
B—Dimension
C—Starter Roll Rod
D—Shim Location
E—Shim Location

CAUTION: Twine arms can move unexpectedly when twine arm power is on. Turn off power to twine arms when standing or placing hands near twine arms.

Twine knife has two cutting edges. Be careful when working around the knife. It is sharp.

NOTE: Adding or removing shims located between the twine arm support and crossbeam will affect dimensions at the following locations:

- *Twine arm-to-starter roll:*
  - *Twine arm pointing directly toward rear.*
  - *Twine arm toward right side of baler.*
  - *Twine arm toward left side of baler.*
- *Twine arm-to-cutter link support.*
- *Twine arm-to-twine arm stop.*

Check dimensions at all locations before performing adjustments. Adding or removing shims at one location can change the dimension at another location.

1. Start tractor engine and raise gate fully.
2. Lower pickup so twine arms will not contact pickup teeth.
3. Shut off tractor engine and remove key. Lock the gate.
4. Remove lower drive roll chain so starter roll can be rotated by hand.

Adjust Twine Arm-to-Starter Roll

1. Turn tractor key to ON position. Do not start tractor engine. Press ON or OFF key to turn monitor-controller ON.
2. Press EXTEND key to move twine arms so rear twine arm (A) points toward rear of baler.
3. Turn monitor-controller OFF. Turn tractor key to OFF position. Remove key.
4. Rotate starter roll until starter roll rod (C) is closest to the twine arm tube.
5. By hand, remove end play at end of twine arm toward starter roll. Check dimension (B) between starter roll rod (C) and twine arm tube. Dimension (B) must be within specifications.

Specification	
Starter Roll Rod-to-Twine Arm Tube—Distance	6—12 mm (1/4—1/2 in.)

6. If dimension (B) is less than specified:
   - Remove shims, as necessary, at location (D) between twine arm support and crossbeam. Remove an equal number of shims at the right-hand and left-hand mounting bolts. (One shim moves twine arm approximately 3 mm [1/8 in.].)

     OR

   - Add shims, as necessary, at location (E) between twine arm support and crossbeam. Add an equal number of shims at the right-hand and left-hand mounting bolts.
7. If dimension (B) is more than specified:
   - Remove shims, as necessary, at location (E) between twine arm support and crossbeam. Remove an equal number of shims at the right-hand and left-hand mounting bolts. (One shim moves twine arm approximately 3 mm [1/8 in.].)

     OR

   - Add shims, as necessary, at location (D) between twine arm support and crossbeam.

8. Turn tractor key to ON position. Do not start tractor engine. Turn monitor-controller ON.

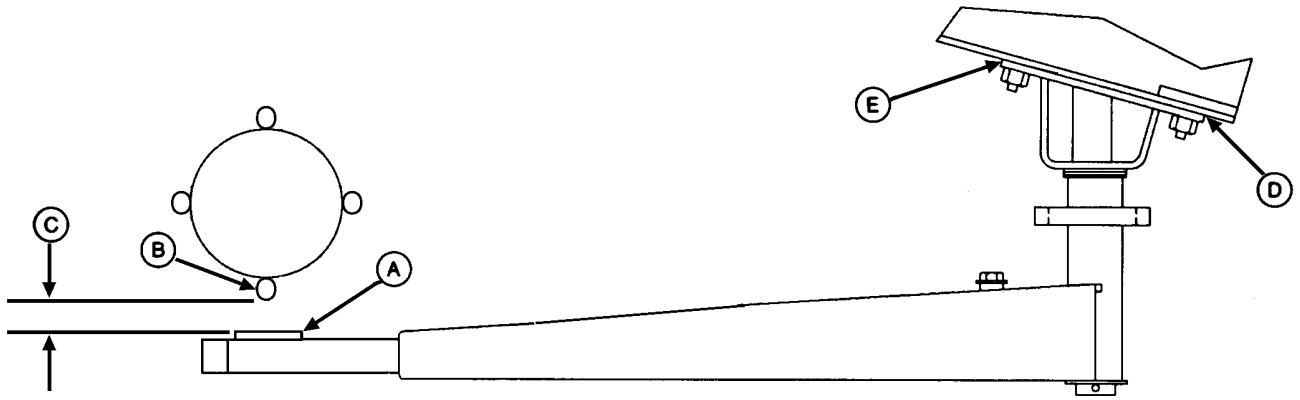

E41680—UN—31OCT96

A—Strap
B—Starter Roll Rod
C—Dimension
D—Shim Location
E—Shim Location

9. Press monitor-controller EXTEND key to move twine arms to right of center so strap (A) is below starter roll rod (B).
10. Turn monitor-controller OFF. Turn tractor key to OFF position. Remove key.
11. Rotate starter roll until starter roll rod (B) is closest to twine arm strap (A).
12. By hand, remove twine arm end play at end of twine arm toward starter roll.
13. Check dimension (C) between starter roll rod (B) and strap (A). Dimension (C) must be to specifications.

Specification	
Starter Roll Rod-to-Strap—Clearance (Minimum)	3 mm (1/8 in.)

14. If dimension (C) is less than specified, add an equal number of shims at right-hand location (D and E), or remove an equal number of shims at left-hand location (D) and (E).
15. Turn tractor key to ON position. Turn monitor-controller ON.
16. Press monitor-controller RETRACT key to move twine arm left of center so strap (A) is below starter roll rod (B).
17. Turn monitor-controller OFF. Turn tractor key to OFF position. Remove key.
18. Rotate starter roll until starter roll rod (B) is closest to twine arm strap (A).
19. If dimension (C) is less than specified, add an equal number of shims at the left-hand locations (D) and (E), or remove an equal number of shims at the right-hand locations (D) and (E).

Adjust Twine Arm-to-Cutter Link Support

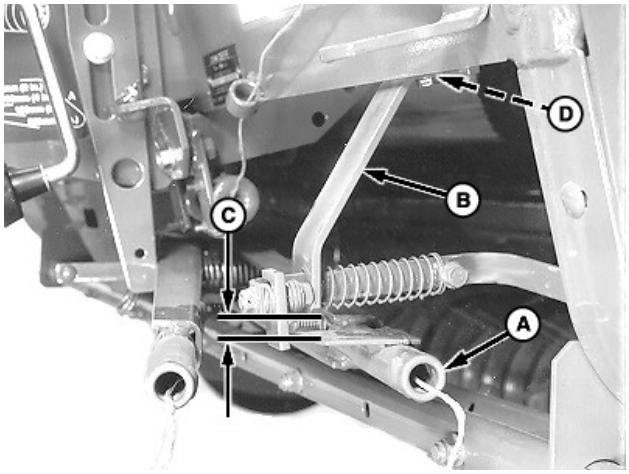

E40634—UN—06SEP00

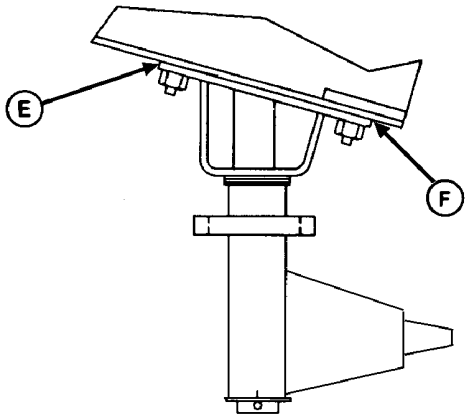

E41682—UN—24OCT96

A—Twine Arm
B—Cutter Link Support

C—Dimension
D—Shim Location
E—Shim Location
F—Shim Location

1. Turn tractor key to ON position. Do not start tractor engine. Press ON or OFF key to turn monitor-controller ON.
2. Press monitor-controller RETRACT key to move twine arms until twine arm (A) lightly contacts the cutter link contact tab.
3. Turn monitor-controller OFF. Turn tractor key to OFF position. Remove key.
4. Check dimension (C) between top of twine arm strap and bottom edge of cutter link support (B). Dimension (C) must be within specifications.

Specification	
Top of Twine Arm Strap-to-Bottom Edge of Cutter Link Support—Clearance	6 mm (1/4 in.)

5. If dimension (C) is less than specified and no shims exist at location (D) between support (B) and crossbeam:
   - Add an equal number of shims between twine arm support and crossbeam at left-hand locations (E) and (F).

     OR

   - Remove an equal number of shims between twine arm support and crossbeam at right-hand locations (E) and (F).

Adjust Twine Arm-to-Twine Stop

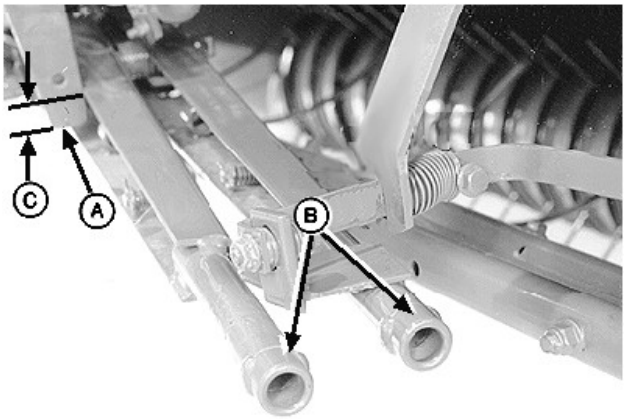

E40623—UN—01JUL96

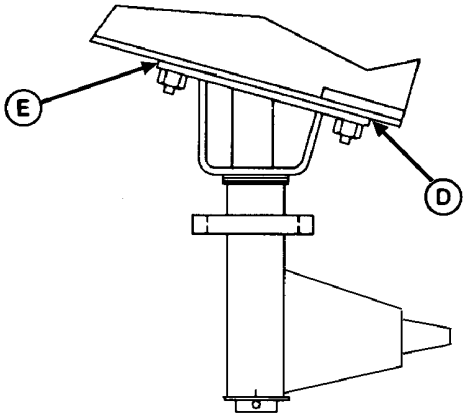

E40617—UN—07OCT96

A—Twine Arm Stop
B—Twine Arms
C—Minimum Overlap
D—Shim Location
E—Shim Location

1. Make sure twine arm stop (A) is in the down position.
2. Turn tractor key to ON position. Do not start tractor engine. Press ON or OFF key to turn monitor-controller ON.
3. Press monitor-controller RETRACT key to return twine arms (B) to home position.
4. Turn monitor-controller OFF. Turn tractor key to OFF position. Remove key.
5. Check overlap (C). There must be a minimum overlap between bottom of stop (A) and front twine arm surface to within specifications.

Specification	
Bottom of Stop-to-Front Arm Surface—Overlap	2 mm (3/32 in.)

6. If dimension (C) is less than specified:
   - Add an equal number of shims at the right-hand locations (D) and (E).

     OR

   - Remove an equal number of shims at the left-hand locations (D) and (E).

Check twine arm adjustments

1. Check clearances again between twine arm and starter roll, twine arm and cutter link support, and twine arm to twine arm stop. If twine arm to starter roll dimension has changed due to adjusting twine arm to cutter link support or twine arm stop, adjust shims between twine arm and crossbeam as needed.
2. Adjust twine cutter-to-twine arm. (See ADJUST TWINE CUTTER-TO-TWINE ARM in this section.)

3. Install lower drive roll chain.
4. Unlock and close gate.

PP98408,00010D1-19-09JUL13

Adjust Gate Latch Stop

NOTE: Door is removed for illustration purposes only.

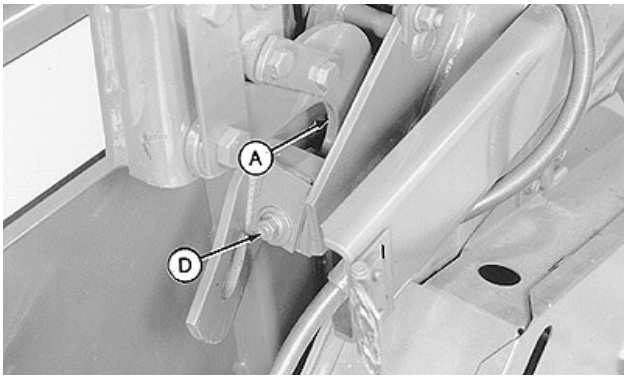

E40982—UN—04DEC96

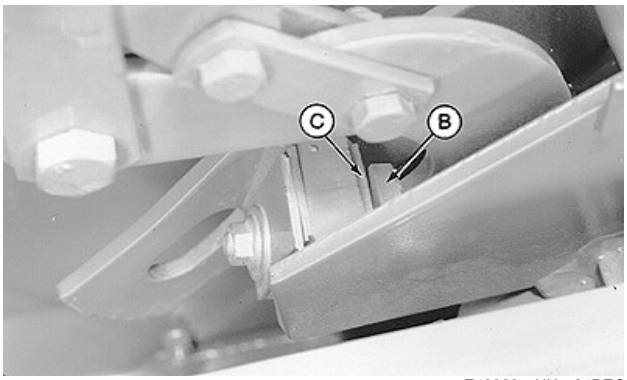

E40983—UN—04DEC96

A—Gate Latch
B—Gate Latch Stop
C—Stop Pad
D—Cap Screw

1. Remove any material buildup between gate and frame.
2. Close and latch gate. Push gate latch (A) forward by hand to remove slack. If distance between gate latch stop (B) and stop pad (C) is not within specifications, shim as necessary using the following instructions:

Specification	
Gate Latch Stop-to-Stop Pad—Distance	1—3 mm (1/32—1/8 in.)

   a. Loosen cap screw (D). *(Shims are slotted so cap screw does not have to be removed.)*

   NOTE: If proper adjustment cannot be obtained, check for twisted gate by closing gate with tractor engine off. If there is a gap on one side when other side is contacting, see your John Deere dealer for correct procedure to straighten gate.

   b. If distance is greater than specified, transfer shims from storage position to shimming position until specification is obtained.

      If distance is less than specified, transfer shims from shimming position to storage position until specification is obtained.

   c. Center shims and stop pad and tighten cap screw (D). If necessary, repeat procedure on opposite side.

3. Check belt tracking. (See CHECK BELT TRACKING in this section.)

PP98408,00010D6-19-11FEB13

Adjust Gate Latch Linkage

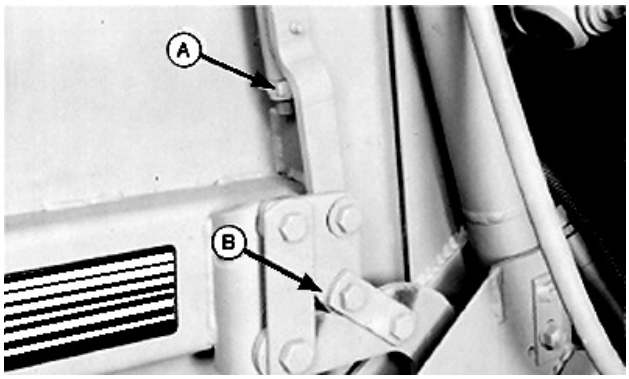

E39717—UN—06FEB96

A—Nut
B—Plate

1. Close gate. Make sure that gate cylinders are fully retracted.
2. Adjust nut (A) until plate (B) just touches relief notch in hook.
3. Repeat on opposite side.

PP98408,00010D7-19-11FEB13

Replace Bale Diameter Sensor

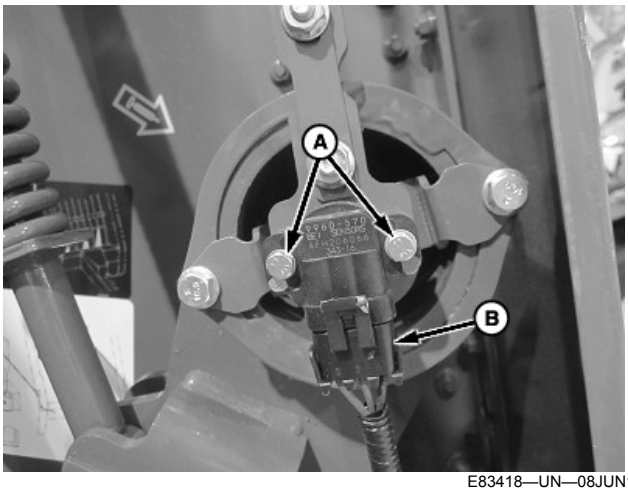

E83418—UN—08JUN17

A—Cap Screw (2 used)
B—Connector

1. Unplug the connector (B) from the sensor.
2. Remove and retain the cap screws (A).

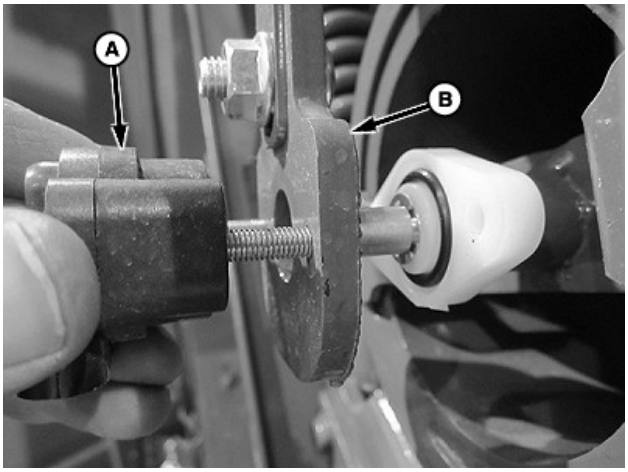

E83538—UN—15JUN17

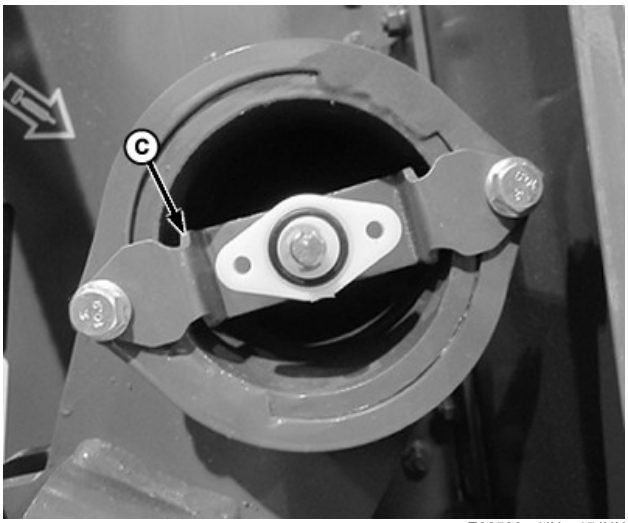

E83539—UN—15JUN17

A—Sensor
B—Shaft Bracket
C—Shaft Bracket Assembly

3. Remove the sensor (A) from the shaft bracket (B). Replace the sensor (A).
4. Remove the shaft bracket assembly (C), if necessary.

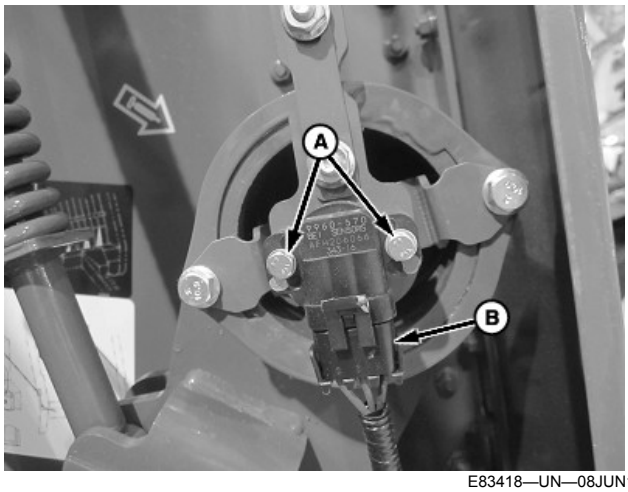

E83418—UN—08JUN17

A—Cap Screw (2 used)
B—Connector

5. Reinstall the cap screws (A) and plug in the connector (B).

DP99999,0000DC5-19-21NOV17

Replace Bale Shape Sensor

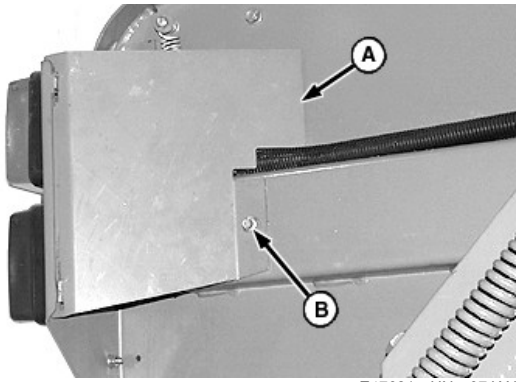

E47621—UN—07JAN00

Right-Hand Side Shown

A—Shield
B—Self-Tapping Cap Screw

1. Engage the gate lock and raise the tension arm.
2. Turn the monitor-controller OFF. Turn the tractor ignition key to the OFF position and remove the key.
3. Remove and retain cap screw (B). Rotate the shield (A) away from the baler.

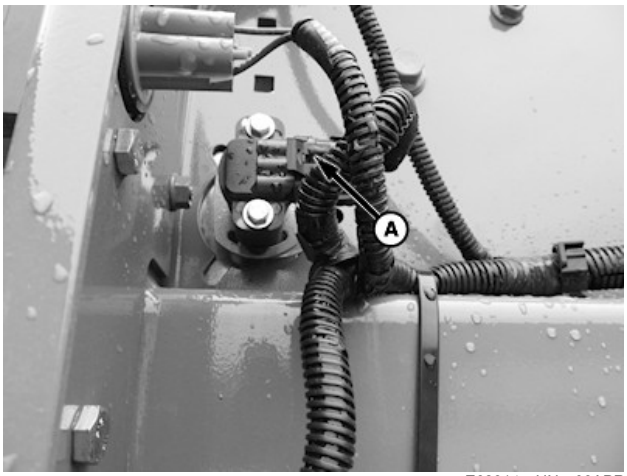

E62314—UN—03APR12

Right-Hand Side Shown

A—Wire Connector

4. Disconnect wire connector (A).

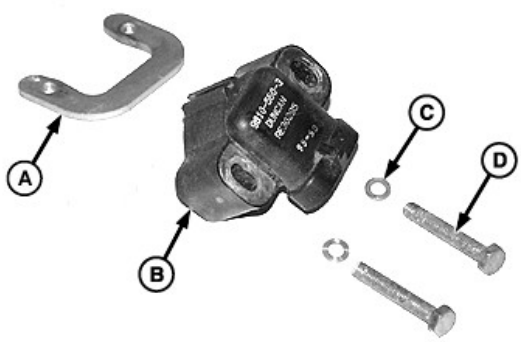

E84114—UN—12SEP17

A—Mounting Strap
B—Sensor
C—Washer (2 used)
D—Cap Screw (2 used)

5. Remove cap screws (D) and washers (C) retaining the sensor (B), and mounting strap (A).
6. Install new sensor in the reverse order of removal.
7. Calibrate the sensor using the BaleTrak™ Monitor-Controller. (See ADJUST BALE SHAPE SENSOR [CHANNELS 007 and 009] in the Service—BaleTrak™ Pro and Plus section.)

DP99999,0000DC9-19-15SEP17

Replace Gate Latch Proximity Switches

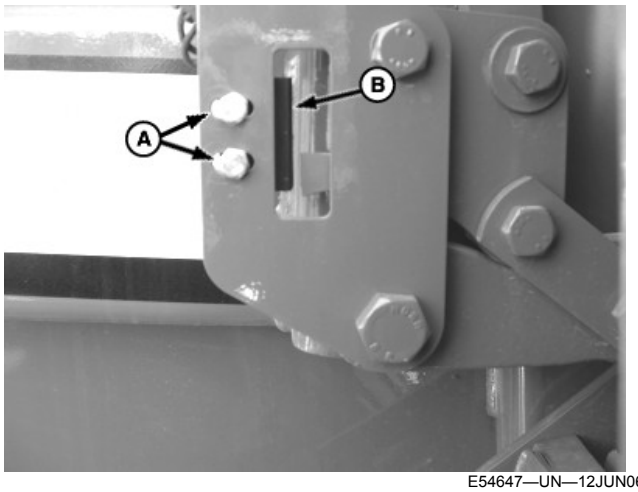

E54647—UN—12JUN06

A—Mounting Hardware
B—Proximity Switch

1. Turn monitor-controller OFF. Turn tractor key to OFF position. Remove key.
2. Remove mounting hardware (A) and switch (B).
3. Disconnect wire harness from switch.
4. Remove switch from mounting bracket.
5. Install new switch in reverse order of removal using the following procedure:
   - Adjust switch position for proper operation. (See Adjust Gate Latch Proximity Switches) in this section.)
   - Confirm switch operation by taking test readings using control monitor. (See Adjust Gate Latch Proximity Switches and Adjust Oversize Bale Switch in this section.)

SF04007,00010BE-19-27NOV17

Replace Oversize Bale Switch

1. Turn monitor-controller OFF. Turn tractor key to OFF position. Remove key.

NOTE: Label wires before disconnecting from switch to ensure proper connection to new switch terminals.

2. Label wires.

BaleTrak is a trademark of Deere & Company

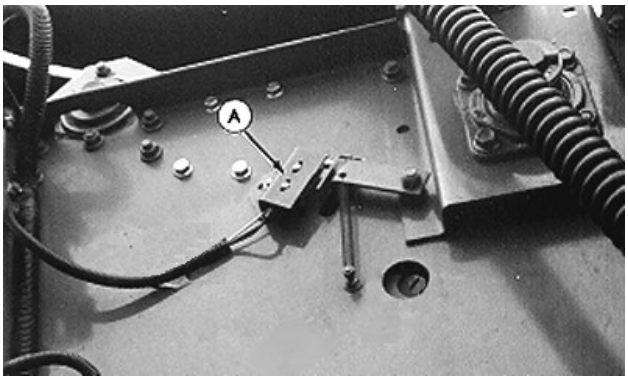

E38428—UN—14FEB96

A—Oversize Bale Switch

3. Remove mounting hardware and bracket with switch (A).
4. Remove switch from mounting bracket.
5. Disconnect wires from switch.
6. Install new switch in reverse order of removal using the following procedure:
   - Adjust switch or bracket position for proper operation. (See Adjust Oversize Bale Switch in this section.)
   - Confirm switch operation by taking test readings using monitor-controller. (See Adjust Gate Latch Proximity Switches and Adjust Oversize Bale Switch in this section.)

SF04007,00010BF-19-27NOV17

Adjust Oversize Bale Switch

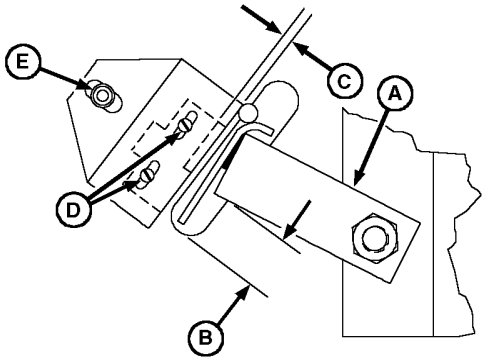

E48030—UN—15MAY00

A—Lever
B—Dimension, 13 mm (0.512 in)
C—Clearance
D—Switch Screw (2 used)
E—Cap Screw

1. Close and latch gate.
2. Raise the oversize bale lever (A) to dimension (B) above lower end of slot.

Specification

Lever-to-Lower End of Slot—Dimension	13 mm (0.512 in)

NOTE: Gate must be closed for oversize bale indicator to be displayed.

3. Check bale lever-to-switch roller contact point. The switch contacts must be closed (indicator or alarm must be activated on the monitor-controller). Clearance (C) between the switch arm and switch body must be within specifications.

Specification

Switch Arm-to-Switch Body—Clearance	0.79—2.38 mm (0.030—0.100 in)

4. If necessary, loosen switch screws (D) and bracket cap screw (E). Position switch so bale lever contacts roller at point shown.

IMPORTANT: Switch or switch bracket must not interfere with bale lever at any point of lever travel or damage to switch can occur.

5. To check for interference and binding, raise lever to the top of the slot. Adjust switch if necessary.
6. Confirm switch operation by taking test readings using monitor-controller. (See Adjust Gate Latch Proximity Switches And Adjust Oversize Bale Switch in this section.)

SF04007,00010C0-19-27NOV17

Adjust Gate Latch Proximity Switches

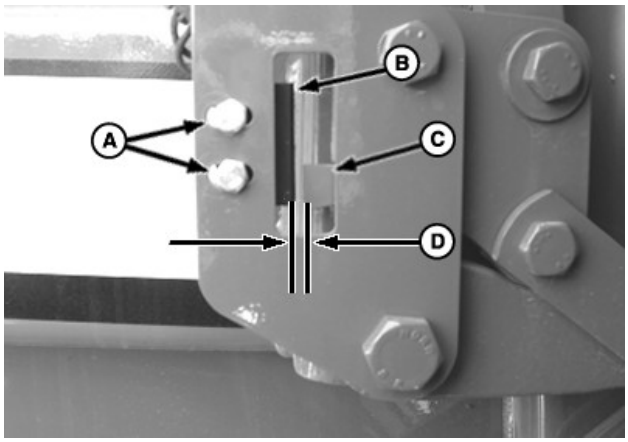

E54646—UN—12JUN06

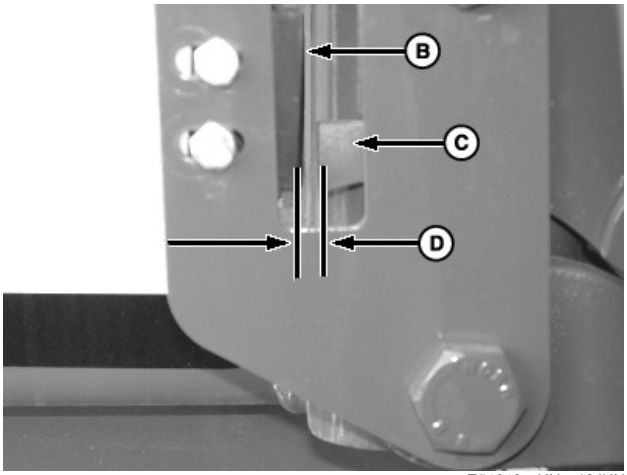

E54648—UN—12JUN06

A—Bolt (2 used)
B—Proximity Switch
C—Latch Bar
D—Dimension, 3.0 mm (1/8 in)

1. Close and latch gate. (*Gate cylinders must be fully retracted.*)
2. Loosen bolts (A) and move the switch so it is parallel with mounting window edge and correct distance (D) from latch bar (C).
3. Ensure proximity switch (B) is even distance from top and bottom of latch bar (C). Set distance to specification.

Specification

Proximity Switch—Distance. . . . . 3.0 mm (1/8 in)

4. Repeat on the opposite side.
5. Confirm switch operation by taking test readings using monitor-controller. (See Adjust Gate Latch Proximity Switches and Adjust Oversize Bale Switch in this section.)

SF04007,00010C1-19-27NOV17

Check Microswitches

NOTE: Label wires before disconnecting from switch to ensure proper connection to switch terminals.

Only terminals (A) and (B) are used.

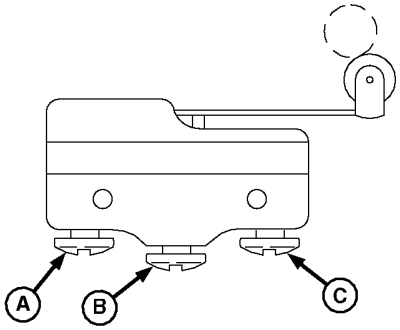

E38432—UN—21FEB95

A—Common Terminal
B—Normally Open Terminal
C—Normally Closed Terminal

1. Disconnect all wires from switch.
2. Attach multimeter leads to common (A) and normally open (B) terminals.
   - When switch lever is released, there must be no continuity through the switch.
   - When lever is depressed (click is heard), there must be continuity through the switch.
3. Move lead from normally open (B) to normally closed (C) terminal.
   - When switch lever is released, there must be continuity through the switch.
   - When lever is depressed (click is heard), there must be no continuity through the switch.
4. If continuity test results are not as described, replace switch.

PP98408,00010E5-19-11FEB13

Check Belt Tracking

IMPORTANT: Check belt tracking before making any belt tracking adjustments.

If belts are new and have not been used, apply granular oil absorbent (oil dry granules) to simulate crop dust and allow belts to track freely.

It is best to apply oil dry granules to belts on a sunny, dry day with the baler in a building or under shelter. If the baler is outside, be sure that belts and rolls are dry. Do not apply oil dry granules on belts that are damp with early morning dew.

CAUTION: To avoid serious injury from entanglement, ensure that bystanders stand clear when operating baler. Do not apply oil dry granules with the baler running.

1. Position gate as follows:

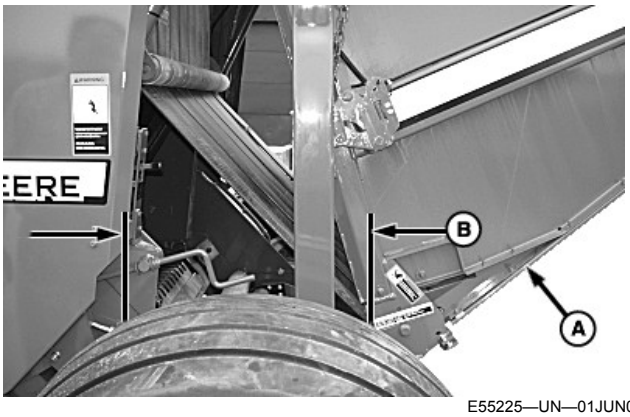

E55225—UN—01JUN07

A—Gate
B—Distance, 0.6—0.9 m (2—3 ft)

a. With a tractor attached to the baler, open gate (A) fully. Then, lower the gate and allow it to remain open a distance (B) of 0.6—0.9 m (2—3 ft).

b. Lock the gate and lower the tension arm until the belts are tight.

c. Shut off engine and remove ignition key.

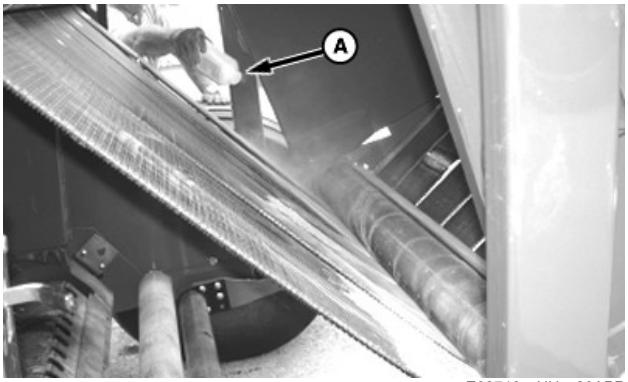

E82716—UN—26APR17

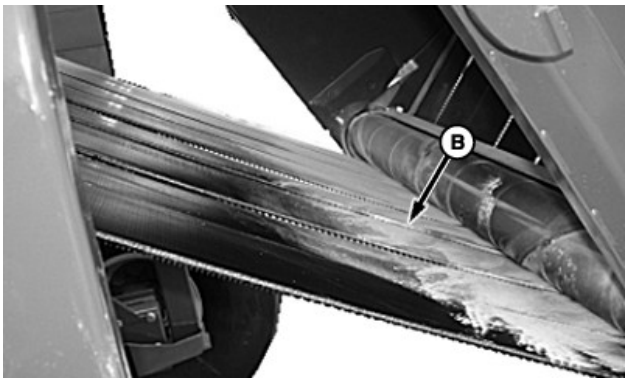

E82717—UN—26APR17

A—Oil Dry Granules
B—Belts

2. Apply oil dry granules to the belts:

   a. Stand outside of the baler tire and liberally sprinkle oil dry granules (A) on all belts (B).

   b. Start the tractor, engage the PTO, and rotate the belts approximately 2.4 m (8 ft). Disengage the PTO.

   c. Shut off engine and remove ignition key.

   d. Repeat steps until the complete length of all belts are thinly coated.

CAUTION: When removing oil dry granules from rolls, ensure that the gate is properly supported, shut off the tractor engine, and remove key.

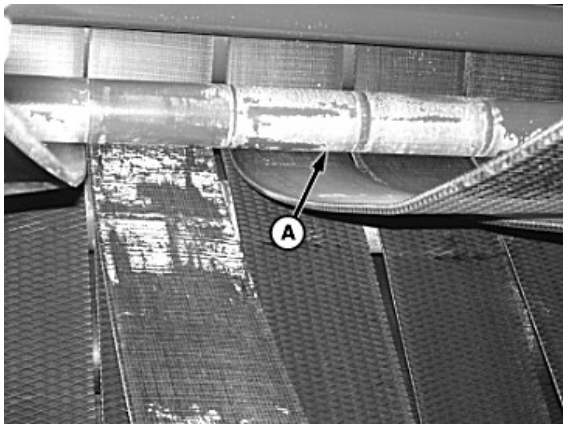

E85613—UN—21NOV17

A—Oil Dry Granules on Rolls

3. If the belts are slightly damp, or humidity is high, oil dry granules can stick to the rolls (A). If the rolls are coated, remove oil dry granules from the rolls, then reapply fresh oil dry granules to the belts.

IMPORTANT: If belts are new and have not been used, apply oil dry granules to simulate crop dust or the belts do not track properly on the rolls.

4. Remove any wrappage or buildup on the rolls.

5. Determine if the gate closes evenly using the following instructions:

   a. Open the gate using tractor hydraulics.

   b. Stop the tractor engine and remove the key.

   c. To allow the gate to close freely, move the tractor SCV lever to the float position.

   d. If both sides of the gate contact the main frame at the bottom, proceed to the next step.

   e. If one side makes contact but the other side has a gap between the gate and frame, see your John Deere dealer or qualified service provider for proper procedure to straighten the gate.

IMPORTANT: Ensure that gate latches are adjusted correctly and latched. If not, belts do not track correctly when bale is being formed.

f. Adjust gate latches it necessary. (See Adjust Gate Latch Stop in this section.)

6. Park the baler on a level surface. With the baler empty and gate closed, engage the PTO and run at slow speed. Be sure that the gate is fully closed, and the pressure gauge is reading 10:00 or higher. Check belt tracking by observing belt positions relative to belt guides.

NOTE: If adjusting is necessary, raise gate with the tractor selector control valve (SCV) until tension arm rotates, releasing belt tension. Lock gate.

7. Shut off engine and remove ignition key. Adjust rolls, if necessary. (See Adjust Belt Tracking in this section.)

DP99999,0000D26-19-21NOV17

Adjust Belt Tracking

IMPORTANT: Check belt tracking before making any belt tracking adjustments.

If belts are new and have not been used, add granular oil absorbent (oil dry granules) to simulate crop dust and allow the belts to track freely.

NOTE: Check belt tracking with the PTO engaged and tractor at lowest rpm. To apply tension to the belts while checking, hold the tractor hydraulic lever in the gate closing position.

NOTE: Light contact with belt guides is acceptable, but belts must not curl against guide straps.

1. If an adjustment is needed, slacken the belts by doing the following procedure:
   a. Raise the gate fully so the tension arm is against the stop.
   b. Lower the gate slowly until belts are slack.
   c. Lock the gate.
   d. Shut off the tractor and remove the key.

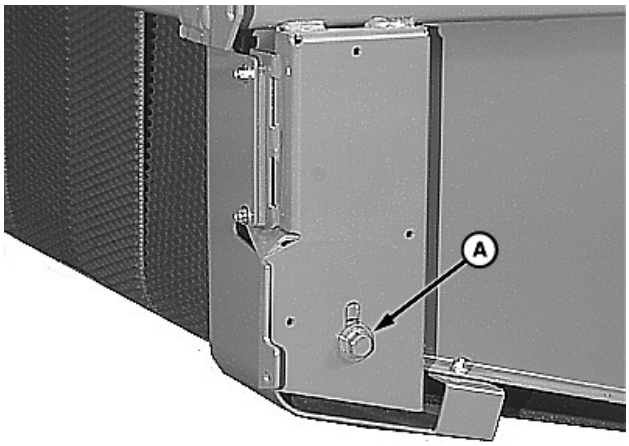

E54427—UN—17OCT05

Without Cover-Edge™ Net Wrap

A—Cap Screw

2. Loosen cap screw (A) and adjust No. 8 roll in the slot with small movements. To observe tracking between adjustments, let the baler run at least 30—40 seconds.

NOTE: Check clearance between washer (B) and guide (C) before adjusting belt tracking. (See Check And Adjust Lower Belt Guides [MegaWide™ Plus Pickup]in Service—Net Wrap section.)

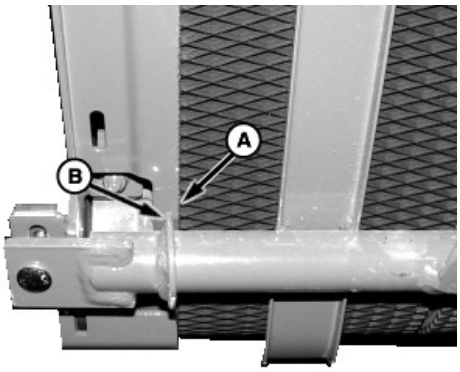

E85619—UN—27NOV17

A—Outside Belt
B—Guide Washer

3. Check tracking of outside belts (A) relative to guide washers (B). **There must be clearance between the outer edge of belt and guide washer on both sides of baler.** Some occasional contact between belt and washer is allowable, but continuous contact is not allowable.

E84162—UN—22AUG17

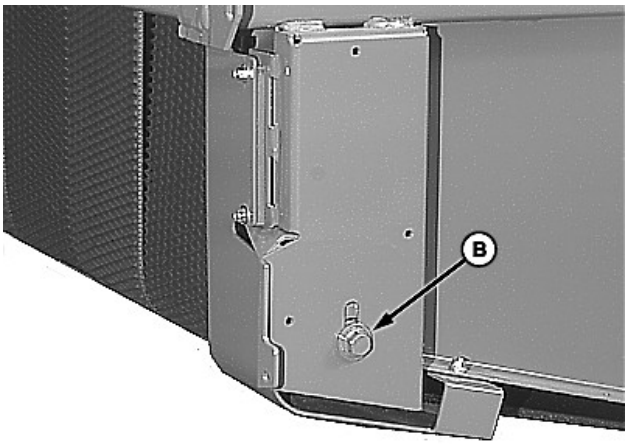

E48783—UN—10AUG00

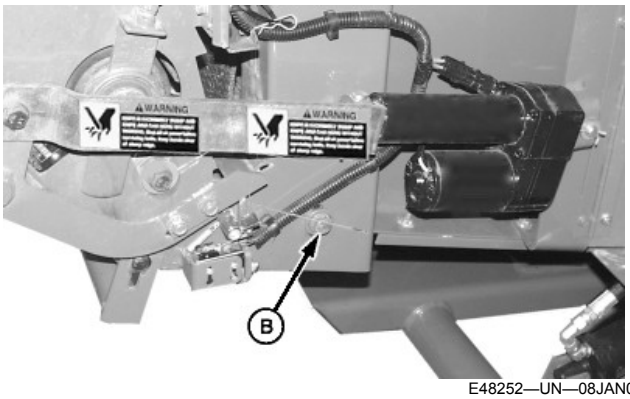

E48252—UN—08JAN02

With Cover-Edge™ Net Wrap

A—Lower Belt Guide
B—Cap Screw

4. If belts are not centered at the lower belt guide (A), make the following adjustments:
   - If belts track to the left:
     a. Loosen cap screw (B) at the right-hand side.
     b. Raise the right-hand end of the lower rear gate roll.
     c. Tighten cap screw (B).
   - If belts track to the right:
     a. Loosen cap screw (B) at the right-hand side.
     b. Lower the right-hand end of the lower rear gate roll.
     c. Tighten cap screw (B).

NOTE: After adjustment, be sure neither belt contacts the guide washers continuously as described previously.

Light contact with the belt guides is acceptable, but belts must not curl against guide straps.

5. Tighten cap screw (B) to specification.

Specification

Cap Screw—Torque. . . . . 140 N·m (105 lb·ft)

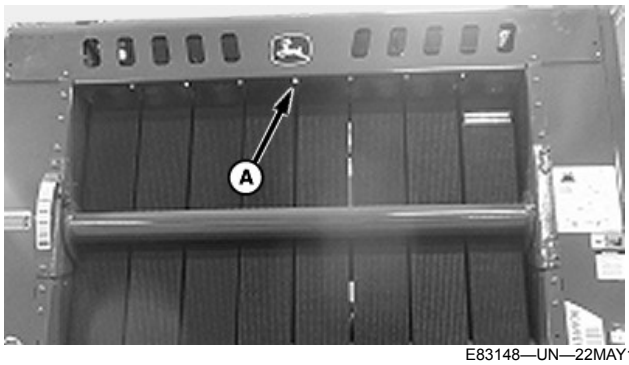

E83148—UN—22MAY17

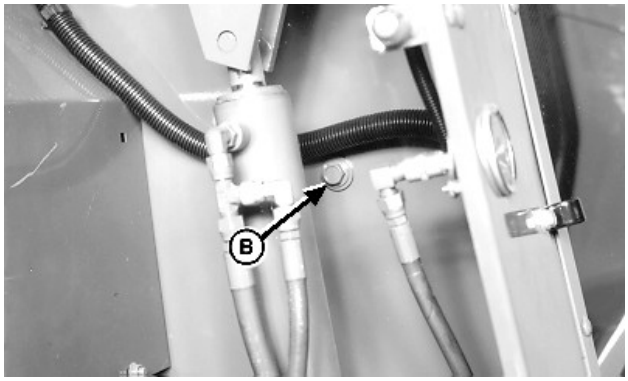

E39722—UN—09FEB96

A—Front Belt Guide
B—Front Idler Roll

6. If the belts are not centered at the upper front belt guide (A), make the following adjustments:
   - If belts track to the right:
     a. Loosen cap screw (B) at the right-hand side.
     b. Raise the right-hand end of the front idler roll.
     c. Tighten cap screw (B).

   OR

     a. Loosen cap screw at the left-hand side.

b. Lower the left-hand end of the front idler roll.

c. Tighten the cap screw.

- If belts track to the left:

a. Loosen cap screw (B) at the left-hand side.

b. Raise the left-hand end of the front idler roll.

c. Tighten the cap screw.

OR

a. Loosen cap screw at the right-hand side.

b. Lower the right-hand end of the front idler roll.

c. Tighten cap screw (B).

7. Tighten cap screw (B) on both ends of the roll to specification.

Specification

Mounting Cap Screw—Torque. . . . . 140 N·m (105 lb·ft)

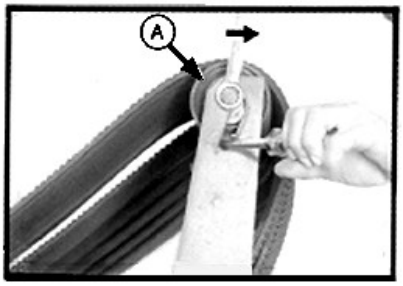

E39725—UN—09FEB96

A—Take-Up Roll

8. If belts are not centered at the upper rear guide, make the following adjustment:
   - If the belts track to the right, move the right-hand end of the take-up roll (A) in the direction shown in the short leg of the L-shaped slot.
   - If the belts track to the left, move the left-hand end of the take-up roll (A) in the direction shown in the short leg of the L-shaped slot.
   - Tighten the cap screw to specification.

Specification

Mounting Cap Screw—Torque. . . . . 140 N·m (105 lb·ft)

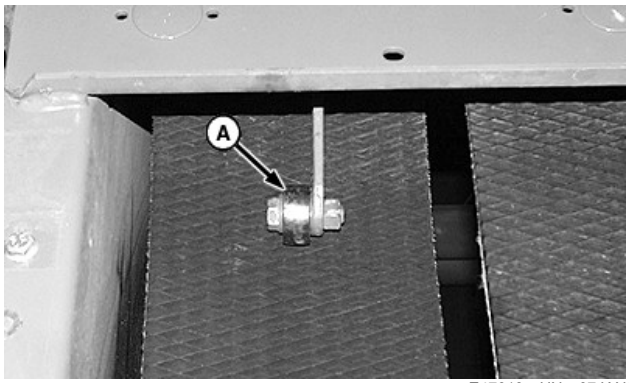

E47618—UN—07JAN00

Left-Hand Side Shown

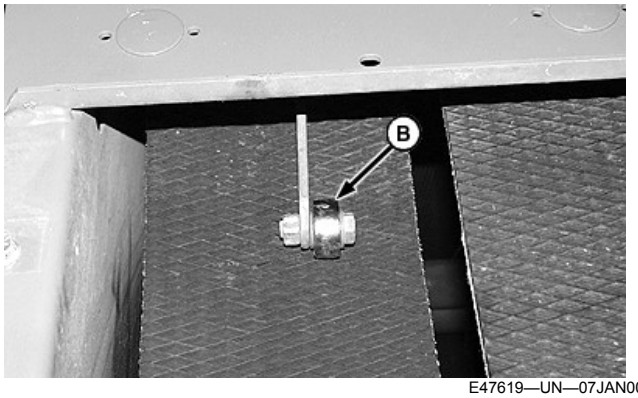

E47619—UN—07JAN00

A—Roller (Normal Outside Position)
B—Roller (Inside Position)

9. If outside belts track to the outside, rubbing the lower belt guide or side of baler, adjust as follows:
   - Move the roller from the normal outside position (A) on the sender arm to the inside position (B). The belt then tracks towards the middle of the baler.

DP99999,0000E02-19-27NOV17

Check Belt Pins

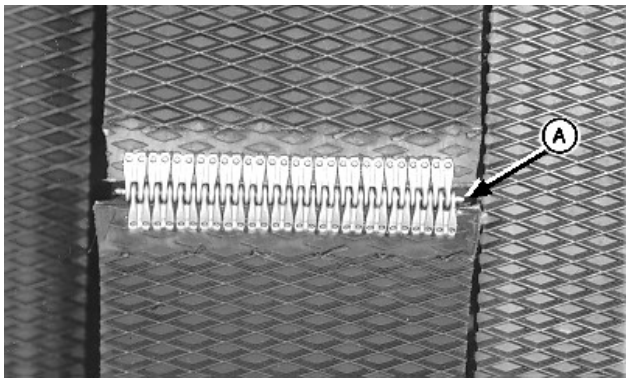

E39736—UN—24MAY96

A—Pins

Check pins (A) for wear or damage every 2000 bales (every 1000 bales in sandy conditions) otherwise broken

pins are difficult to remove. Replace pins if broken, or if more than one-third of pin thickness is worn. Do not deform ends of pins when installing new ones.

To remove pin, grip pin with pliers and turn 90 degrees (1/4 turn) before pulling or tapping out.

PP98408,00010E7-19-11FEB13

Belt Lacing and Pin Installation

IMPORTANT: When belts are assembled, edges must be aligned to prevent belt damage.

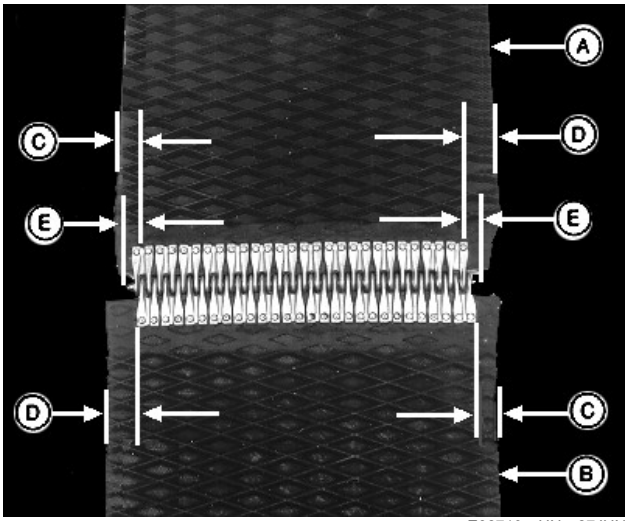

E82719—UN—27JUN17

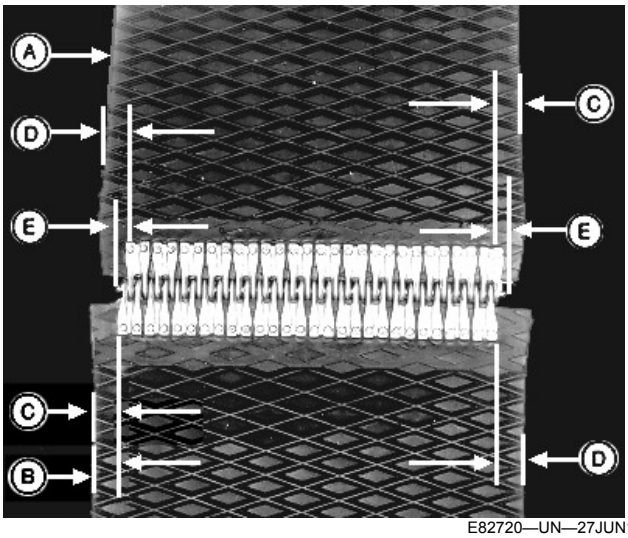

E82720—UN—27JUN17

A—Belt Edge
B—Belt Edge
C—Dimension, 11 mm (0.433 in)
D—Dimension, 14 mm (0.551 in)
E—Dimension, 3 mm (0.118 in)

The laces use the same number of segments on each end of belt, which requires the laces to be offset slightly.

Belt edges (A and B) must be aligned when laced and pinned correctly. Check alignment of the belt edges approximately 51 mm (2 in) back from the belt end. Dimensions (C—E) are shown for reference.

DP99999,0000D38-19-28NOV17

Incorrect Belt Lacing and Pin Installation

IMPORTANT: When belts are assembled, edges must be aligned to prevent belt damage.

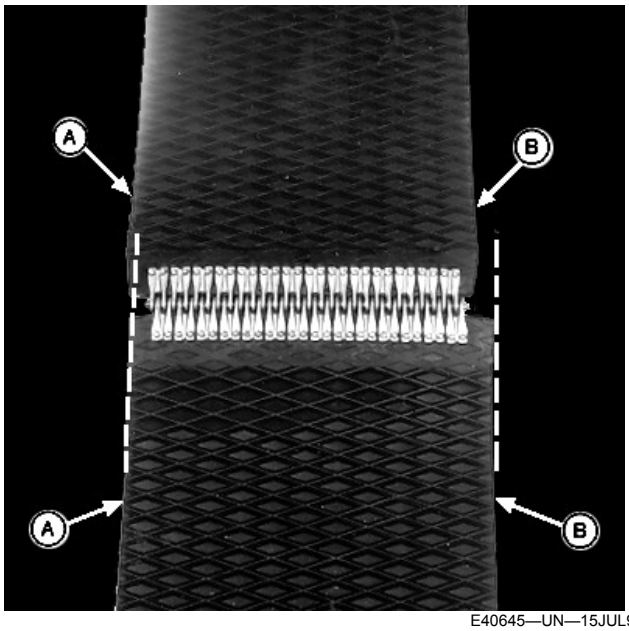

E40645—UN—15JUL96

A—Belt Edges
B—Belt Edges

Belt illustrated is pinned incorrectly. The edges (A and B) of belt do not align. Remove pin and offset laces one loop to align belt

PP98408,00010E9-19-11FEB13

Install Belts

NOTE: See illustration for location of long and short belts. Install belts with diamond portion of the belt to the outside. Make sure that belts are installed through the individual guides.

See Specification section for proper length of belts.

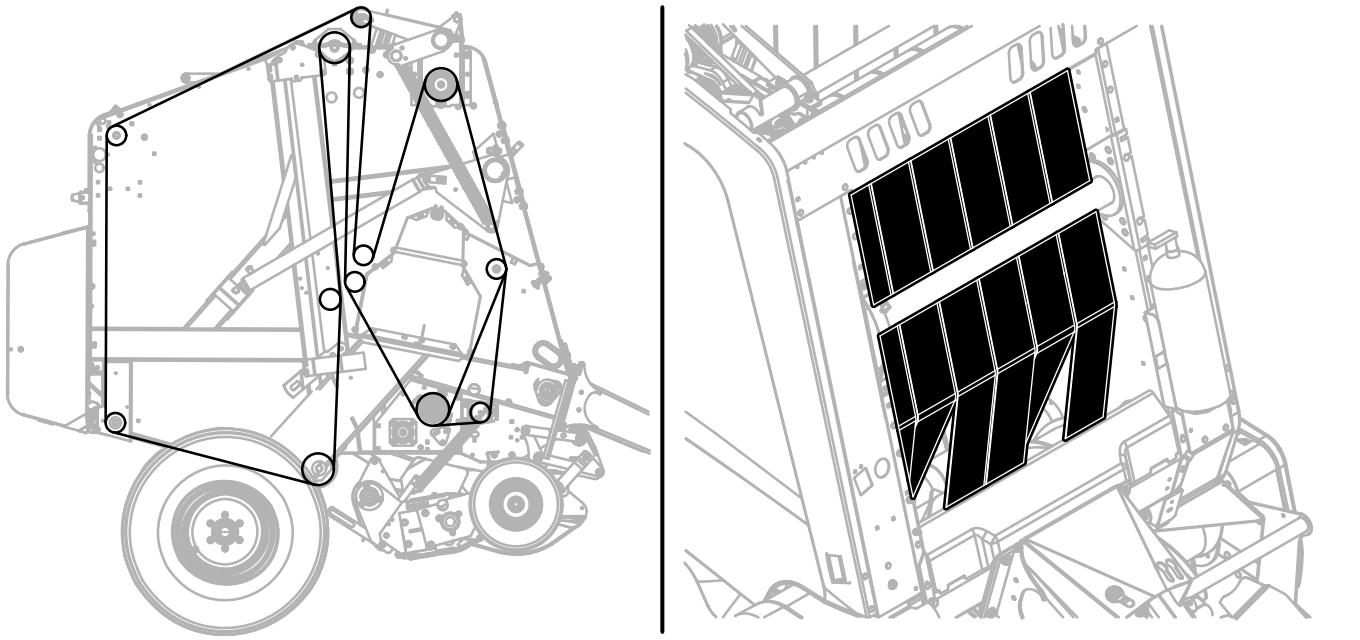

E83435—UN—14JUN17

460M Baler

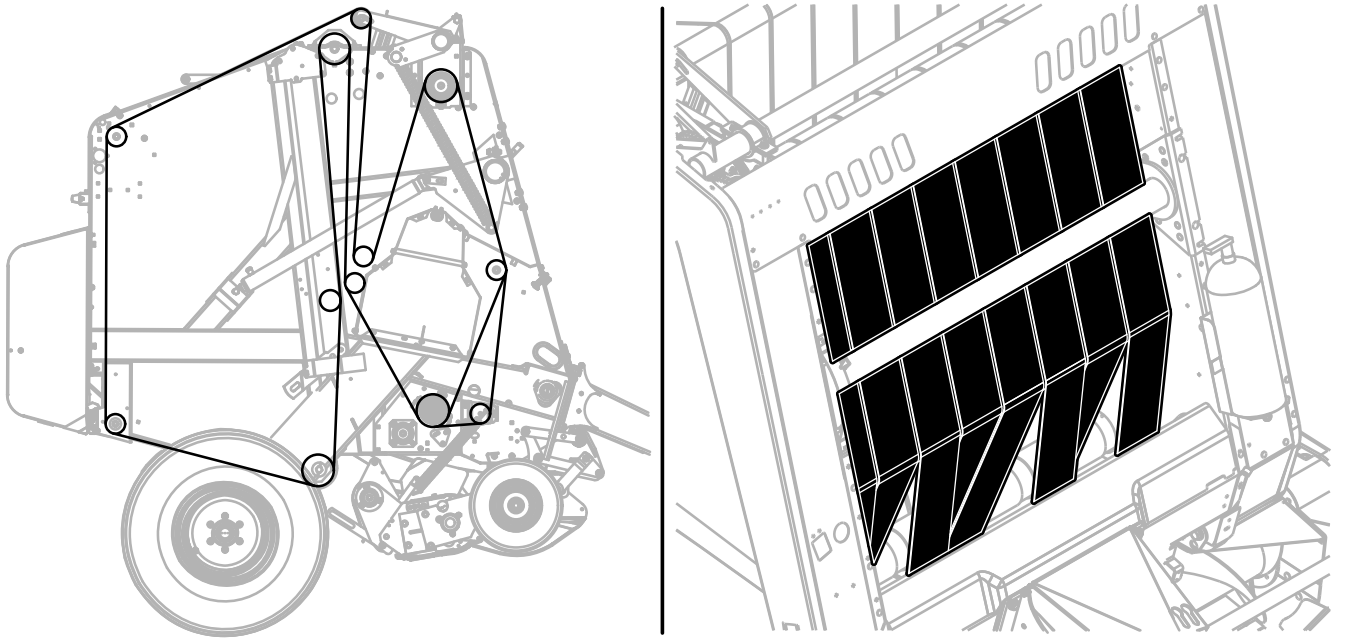

E83436—UN—14JUN17

560M Baler

1. Open the gate fully. Lock the gate.
2. Using the tractor hydraulics, lower the tension arm to tighten belts.
3. Engage the PTO and rotate belts until the splice appears between the bottom gate roll and the tension arm roll.
4. Raise the tension arm to loosen the belts.
5. If the optional auxiliary take-up roll is installed,

unlock and lower the gate slowly until the belts are slack. Lock the gate.

6. Shut off the tractor engine and remove ignition key.

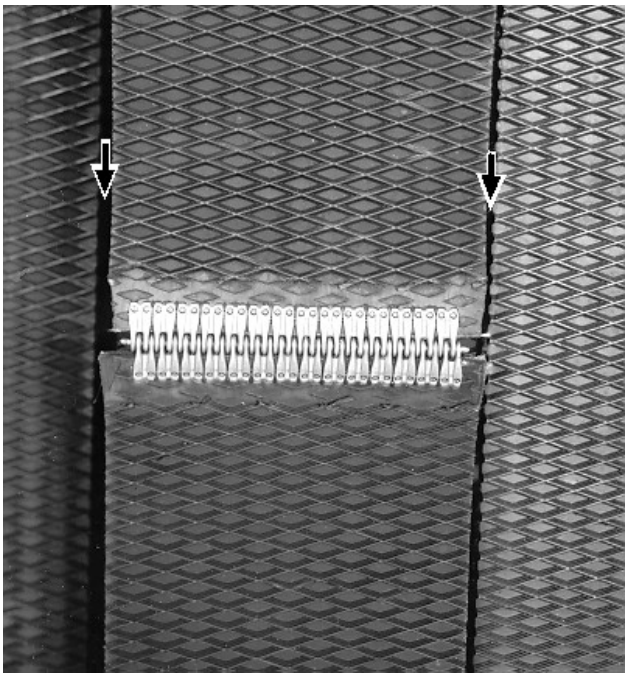

E39737—UN—16FEB96

7. Remove the splice pin. Hook the trimmed end of the new belt to the square end of the old belt with a splice pin. Pull the new belt through the baler using the old belt.

   Thread belts so when viewed in the direction of travel (see illustration), the square cornered end of the belt leads the end with trimmed corners.

8. Fasten belt ends together with a new pin. Make sure that belt sides are correctly aligned when installing pins. Do not deform the ends of lacing pins during installation. Laces are slightly offset to allow alignment of the belt ends.
9. Repeat steps 2—8 for the other belts.
10. Unlock and close the gate.

DP99999,0000D39-19-04AUG17

Repair Belts

NOTE: For further information or to order belt lacing tool, phone or write to:
MATO Corporation
P.O. Box 7268
Beckley, West Virginia 25802
Telephone: (800) 255-1280
Fax: (304) 255-2501

NOTE: Belts can fray at the edges. Cut off the frayed cords as they appear. Cutting frayed cords reduces the chances of them being caught as the bale is formed. If cords are caught, additional fraying or damage to the belts can occur.

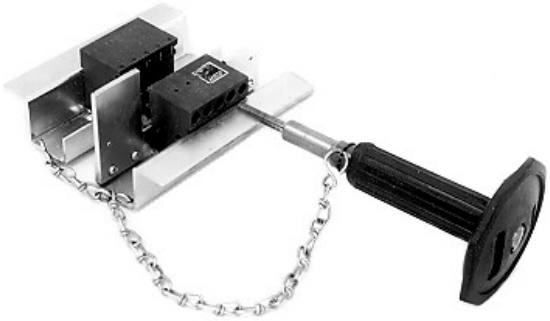

E39821—UN—21MAR96

1. Remove broken belt.

E40026—UN—30MAY96

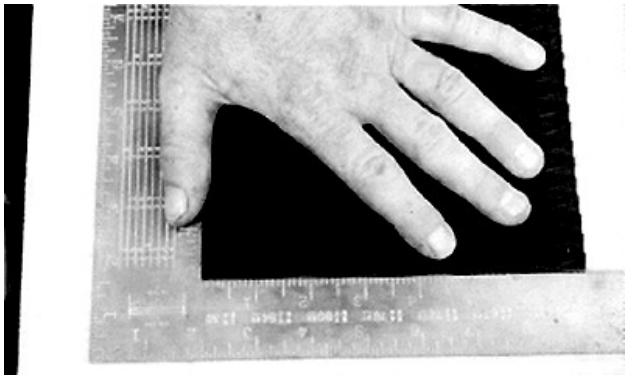

E21798—UN—24JUN99

2. Remove the damaged area using a square and a sharp knife. Check to be sure that the belt end was cut squarely.

IMPORTANT: If belt lengths are less than specified, belts can contact each other between the rear two tension arm rollers when the baler is empty and the gate is closed. When belts contact each other, excessive wear to the belt diamond pattern occurs.

Make sure that all belts are within 38 mm (1.5 in) of the other belts of similar length. There must not be more than 177 mm (7 in), or less than 101 mm (4 in) difference between the long and short belts.

NOTE: If belts are shorter than the specified dimensions, a short piece of belt can be added. Splices (on the same belt) must be at least 305 mm (12 in) apart.

3. Check belt length. Make sure that belt is not longer or shorter than specified.

460M and 560M Belt Lengths			
	Minimum	Repair	Maximum
Short Belts	13 254 mm (521.75 in)	13 305 mm (523.75 in)	13 343 mm (525.25 in)
Long Belts	13 394 mm (527.25 in)	13 445 mm (529.25 in)	13 483 mm (530.25 in)

IMPORTANT: Cut only the diamond pattern. Cutting deeper can damage the belt cords.

Do not use a grinder to remove diamond pattern. Heat from the grinder can damage rubber and fabric.

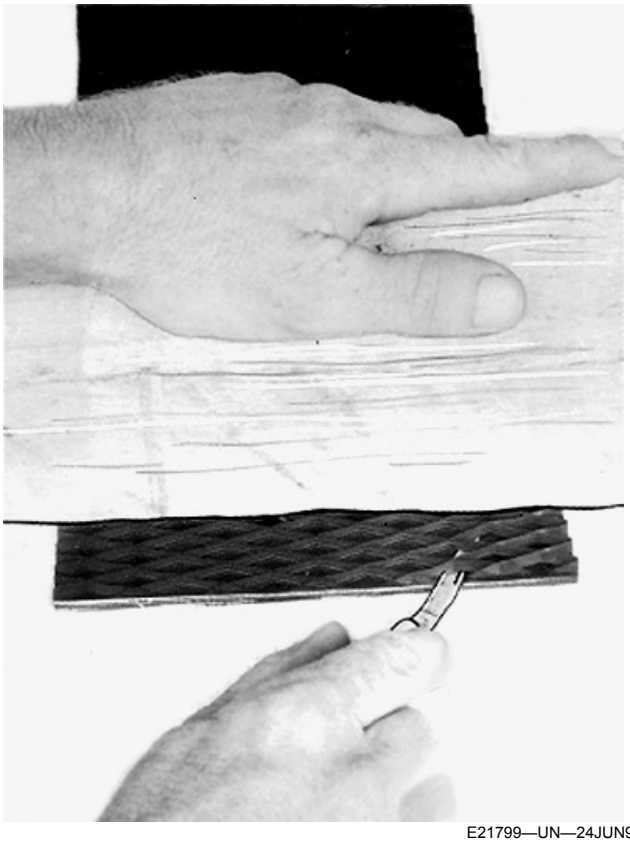

E21799—UN—24JUN99

4. Remove diamond pattern from the belt using a knife or skiving tool.

NOTE: To reduce cutting effort, dip the knife blade in liquid soap.

- If using a knife:
  - To hold the belt as shown, use approximately 25—51 mm (1—2 in) thick board.
  - Measure 25 mm (1 in) from the end of belt.

Use a sharp knife to remove diamond pattern while being careful not to cut to the cord.

E39823—UN—24JUN99

A—Thumb Screw
B—Outer Screw

- If using a skiving tool:
  - Lay belt on a flat surface against a back stop.
  - Adjust skiving tool pressure plate to the thickness of the belt using thumb screw (A).
  - Turn thumb screw (A) down another half turn and lock with outer screw (B).
  - Holding skiver firmly against belt, push the skiver along full width of belt.
  - Repeat, if necessary, until diamond pattern is removed.

IMPORTANT: Do not leave more than 0.5 mm (0.020 in) of the pattern on the belt in the area to be laced. If too much material is left on the belt, hooks do not fasten properly to belt.

Do not remove too much material. If belt cords show, repeat steps 2—4. Make sure that belt length is still within specifications. Add a section of belt if necessary.

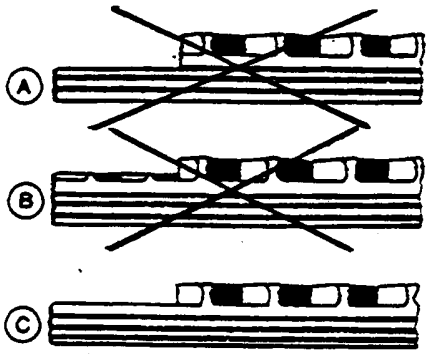

E27606—UN—12SEP88

Belt Cross Section

A—Cut Too Deep
B—Cut Too High
C—Cut Correctly

Belt (A) is cut too deep. Damage to belt cords occur.

Belt (B) is cut too high. Hooks do not fully penetrate through the belt.

Belt (C) is cut correctly.

E27614—UN—12SEP88

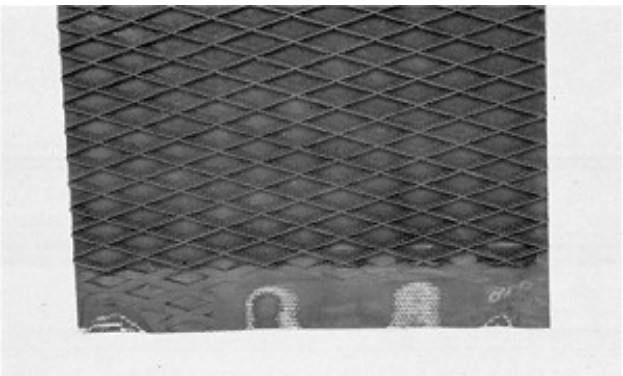

E27615—UN—12SEP88

More examples of incorrectly cut belts:

- Top photo shows vertical cut too deep; belt cords have been damaged (cut), seriously weakening the belt.
- Bottom photo shows that too much diamond pattern was removed, exposing the belt cords.

IMPORTANT: Trailing end of belt must be trimmed using dimensions shown in illustration. DO NOT vary from these dimensions.

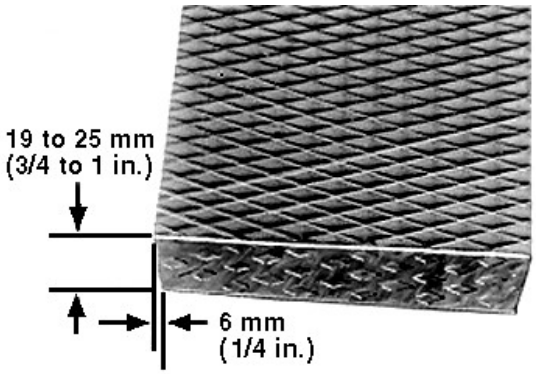

E39835—UN—27MAR96

5. Trim trailing end of the belt as shown.

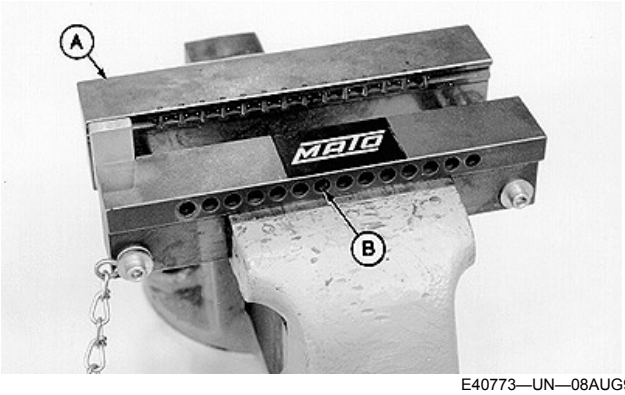

E40773—UN—08AUG96

A—Lacer Tool
B—Holes

6. Put belt lacer tool (A) in vice with holes (B) toward the operator. The shoulder of lacer must rest on jaws of vise.

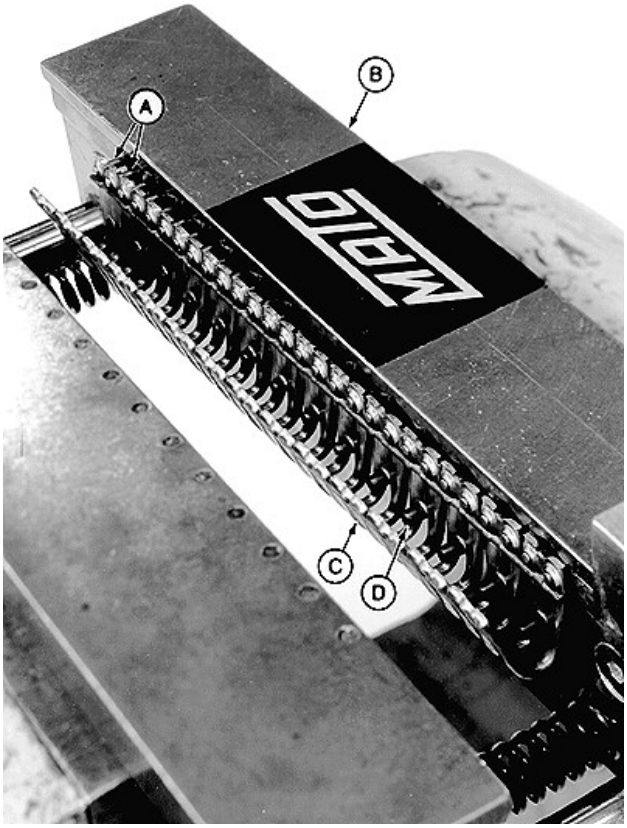

E40774—UN—08AUG96

A—Rivet Pins
B—Lacer Tool
C—Lacing Strip
D—Stop Pins

7. Install lacing strip (C) in the lacer tool (B). Make sure two rivet pins (A) of each lacing segment is inserted into each of the tools' 14 holes. The lacing segments must rest against stop pins (D).
8. Tighten vise until lacing strip is lightly gripped and belt can be easily inserted.

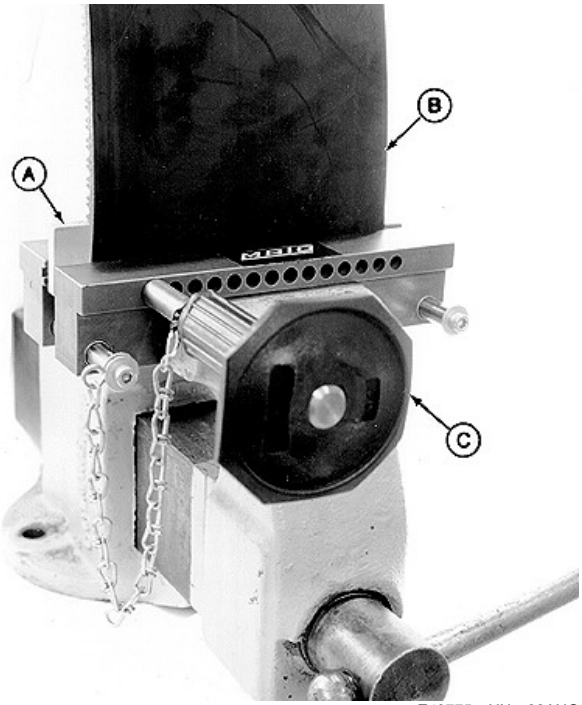

E40775—UN—08AUG96

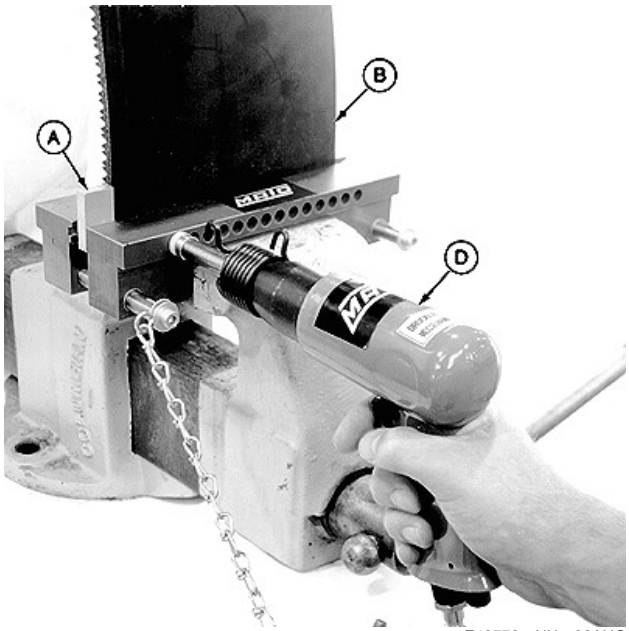

E40776—UN—08AUG96

A—Stop Plate
B—Belt
C—Hand Punch
D—Pneumatic Hammer

9. Install belt (B) in lacing strip with the diamond pattern away from operator. While holding edge of the belt against stop plate (A), uniformly push belt down to the stop pins. Make sure that lacing strip is against stop pins.
10. Make sure that belt and lacing are positioned squarely in the lacer tool. Close vise on belt and lacing until distance between lacer jaws equals width of belt.

IMPORTANT: If using a hand punch, using a hammer that is too large or striking punch too hard can damage lacing tool or belt lacing.

If using a pneumatic hammer, too high air pressure and too long riveting time can damage lacing tool or belt lacing.

11. Drive rivets through belt using a punch (C) or pneumatic hammer (D).

    Rivet the two outer lacing segments first, then working from the outside to the inside, rivet the rest of lacing segments.

    - If using punch (C), drive rivets until shoulder on punch shaft contacts lacer jaw. Hit punch an additional time to ensure contact between the shoulder and lacer jaw.
    - If using a pneumatic hammer (D), set air pressure to 500—600 kPa (5—6 bar) (72—87 psi). Operate hammer for 1—2 seconds for each rivet. Reriveting is not necessary.

12. Remove belt from vise and inspect lacing. All rivets must be driven through belt and show punch marks in center of rivets.

IMPORTANT: Do not hit loop area of fastener when using hammer to flatten heads of rivets.

Do not hit rivets too hard or rivets can buckle and damage joints.

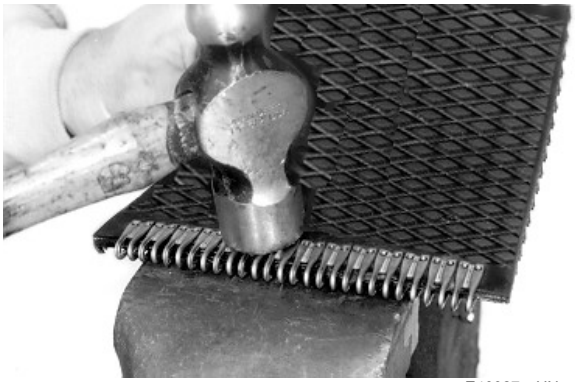

E40027—UN—30MAY96

13. Put belt and lacing on a solid base. Flatten heads of rivets using the flat face of a small hammer. Strike several rivets at a time using a light tapping motion. Rivets must be flush with splice.
14. Repeat procedure for other end of belt.

DP99999,0000D32-19-15NOV17

Belts Eligible For Warranty Replacement

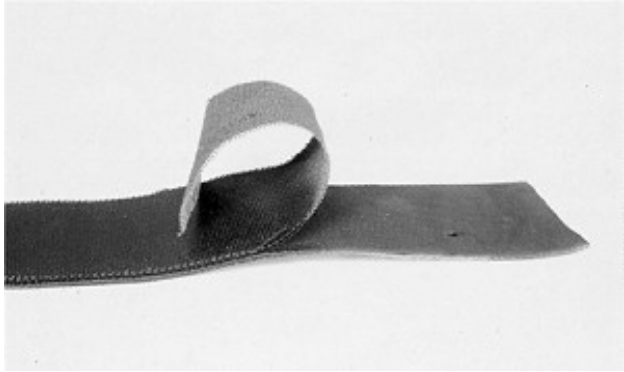

E27607—UN—12SEP88

Upper belts are warrantable if the material and workmanship is defective and machine is under warranty. Ply separation is considered warranty if within the item warranty.

PP98408,00010EC-19-11FEB13

Belts Not Eligible for Warranty Replacement

The following illustrations are belts damaged by accumulation of crop and foreign objects on top of compressor rack and between belts in the starter roll area. A small slug of the buildup passes between the lower drive roll and the belt, which forces the belt into the starter roll. The bars of the starter roll remove chunks of rubber from the belt and tear the belt fabric.

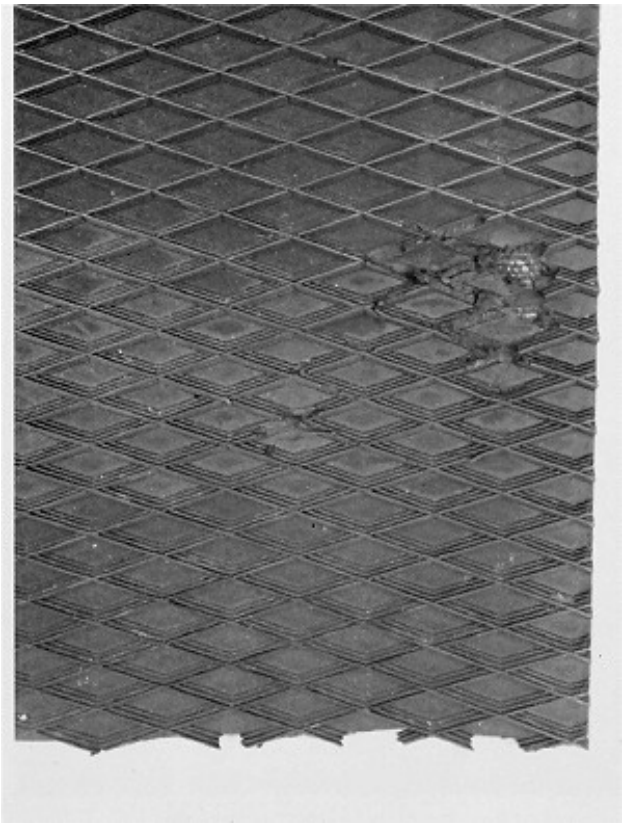

E27608—UN—12SEP88

- Chunks of rubber missing from the surface of the belt.

NOTE: This is not ply separation.

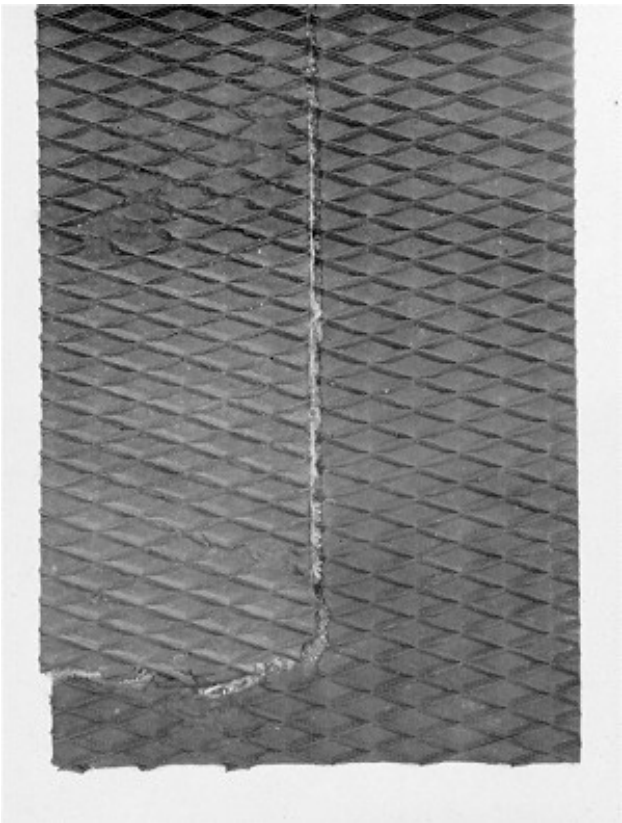

E27609—UN—12SEP88

- Belts with holes or tears.

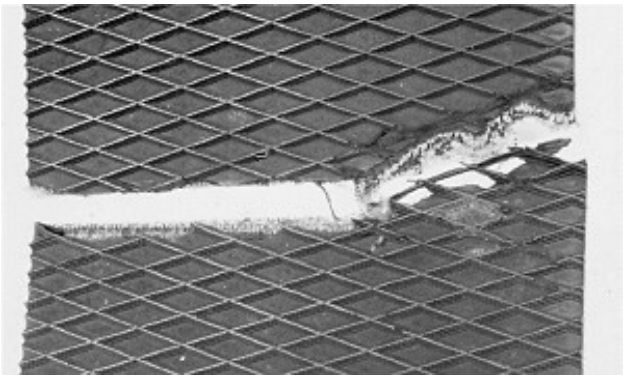

E27610—UN—12SEP88

- Belts that are cut or torn in two.

E27611—UN—12SEP88

- Back side of belt showing damage caused by foreign objects.

E27614—UN—12SEP88

- Belt fabric cut when cutting down toward surface of the belt to remove diamond pattern.

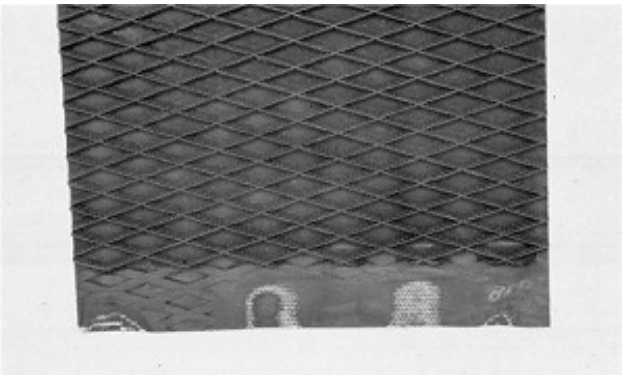

E27615—UN—12SEP88

- Too much of a diamond pattern removed for belt lacing.

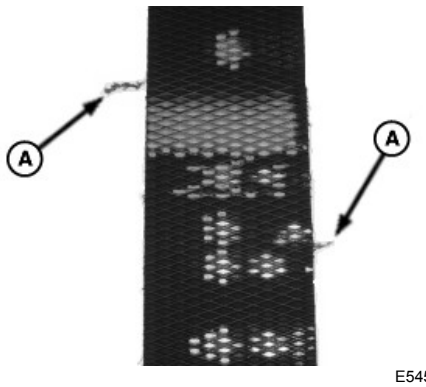

E54524—UN—03MAY06

A—Frays

- Small frays (A) on a belt are normal.

SF04007,00010C2-19-27NOV17

Detailed Service Information

TS224—UN—17JAN89

See the technical (repair) manual for detailed service information or see your John Deere dealer.

PP98408,00010EE-19-11FEB13

Practice Safe Service Procedures

TS268—UN—23AUG88

CAUTION: To help prevent personal injury caused by unexpected movement, be sure to service the machine on a level surface.

If machine is connected to a tractor, engage tractor parking brake and place transmission in Park, shut off engine and remove key.

If machine is detached from tractor, block wheels to prevent movement.

Before servicing net wrap unit:

1. **Disengage all power.**
2. **Shut off tractor engine.**
3. **Wait until all moving parts have stopped.**
4. **Let all components cool.**

To avoid personal injury from inadvertent movement of net actuator, disconnect monitor-controller power plug from tractor power source or unplug connector at net wrap actuator.

On some tractors, convenience outlet is wired directly to the battery. Turning tractor key to OFF position will NOT disconnect power to monitor-controller. Disconnect monitor-controller power plug from tractor power source or unplug connector at net wrap actuator.

PP98408,00010EF-19-11FEB13

Net Wrap Use After Extended Storage

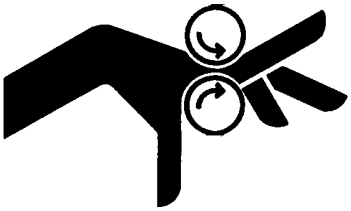

E40200—UN—08JUL96

CAUTION: Avoid injury from entanglement in moving rolls. Disengage PTO, shut off the tractor engine, and disconnect monitor-controller power plug from the tractor power source before servicing.

To minimize start-up problems after storage or after extended twine wrapping operation:

1. Raise the net wrap cover. (See Open and Close Net Wrap Cover in Preparing Baler for Net Wrap section.)

TS268—UN—23AUG88

CAUTION: Be careful when working around the knife. It is sharp.

Be sure that bystanders stand clear before operating net wrap.

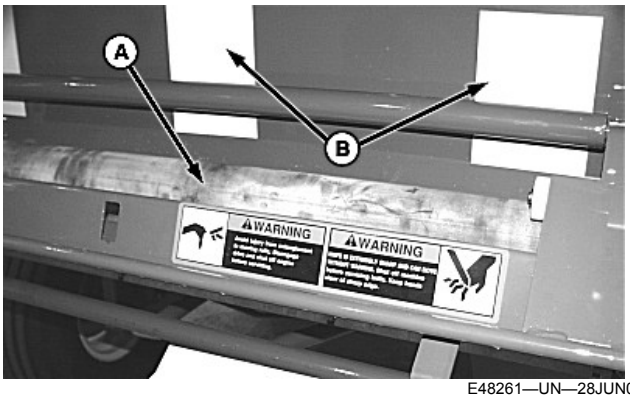

E48261—UN—28JUN00

A—Feed Roll
B—Stainless Steel Plates

2. Remove net wrap and wipe excessive dust or crop material from the feed roll (A) and stainless steel net roll supports (B) with a dry cloth.

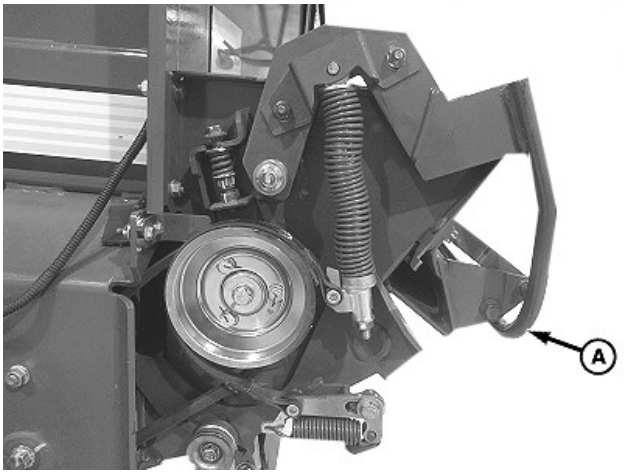

E82339—UN—10MAR17

A—Brake Lever

3. If new wrap is installed in the baler, pull lever (A) out and up.
4. Move the lever up and down one time to rotate the rolls and keep the net from wrapping on the roll. Move the brake lever down to engage the net wrap brake.
5. Close the net wrap cover.

IMPORTANT: Do not lower the gate with the lower net wrap guide detached from the belt guide or damage to the guide results.

Do not operate the baler belts with the lower net wrap guide detached from the belt guide, or belt damage can result.

6. Start tractor engine.
7. Raise the gate fully, then lower the gate until the lower front gate roll is approximately 1 m (39 in) above the ground.
8. Shut off the tractor engine and remove the ignition key.
9. Lock the gate.

CAUTION: The guide swings back when the lower lock nuts are removed. DO NOT let the guide swing back freely or machine damage can result.

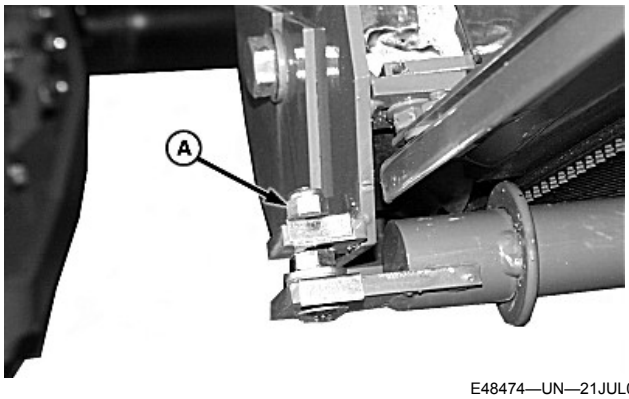

E48474—UN—21JUL00

Left-Hand Shown

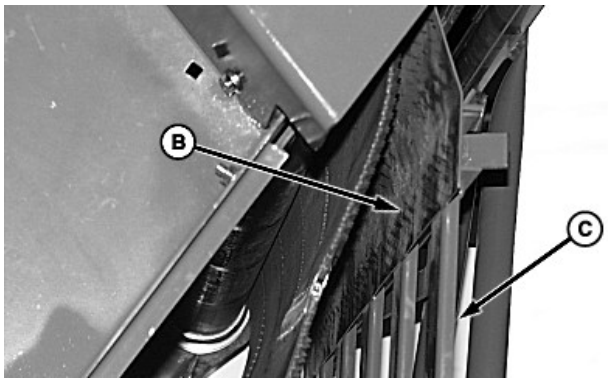

E48313—UN—28JUL00

A—Lock Nut
B—Sheet Metal Area
C—Guide Channels

10. Remove lock nut (A) holding the front corners of the lower net wrap guide.
11. Repeat on the opposite side.
12. Swing the front of the guide away from the gate roll.
13. Polish all of sheet metal area (B) and the tops of channels (C) until smooth using SCOTCH-BRITE® or ultra-fine sandpaper. When using sandpaper, polish marks must be parallel to movement of net.
14. Check sheet metal area (B) for holes made from wear. Holes can be caused by excessive net pan pressure against belts. (See Check and Adjust Net Pan Pressure in this section.)
15. If sheet metal has holes worn in it, replace the guide. (See your John Deere dealer.)

SCOTCH-BRITE is a registered trademark of the 3M Company.

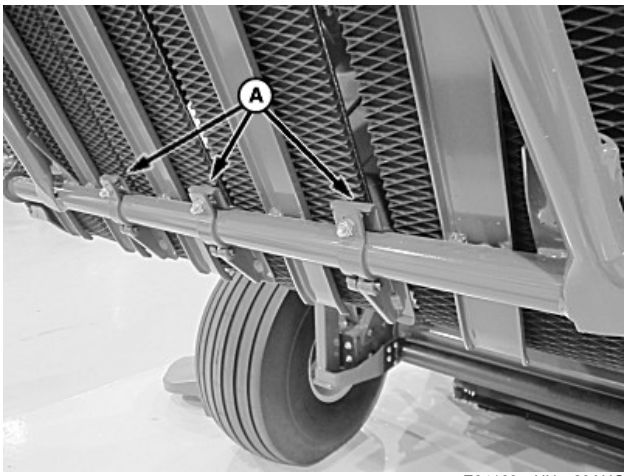

E84163—UN—23AUG17

A—Guide Straps

16. Position belts between guide straps (A).
17. Swing the front of the assembly toward the bottom front roll.

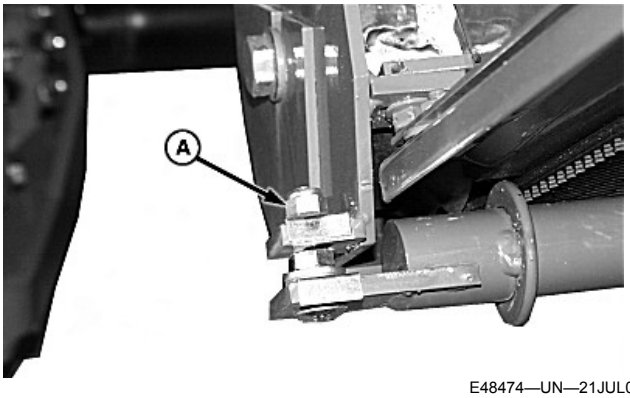

E48474—UN—21JUL00

A—Lock Nut

18. Align the holes and install lock nut (A).

IMPORTANT: If the belt guide strap clearance is more than 5 mm (3/16 in), damage to the baler belts can occur.

If belt guide strap clearance is less than 3 mm (1/8 in), slitting of net material during feeding can occur.

NOTE: To reduce net material slits while baling cornstalk, milo, or sorghum, adjust clearance to 4—5 mm (0.16—0.20 in).

19. Check and adjust clearance between the ends of all belt guide straps and the bottom cross-member. (See Check and Adjust Lower Belt Guides in this section.)
20. Tighten lock nut (A) on each side.
21. Start tractor engine.
22. Unlock the gate and lower it fully.
23. Shut off the tractor engine.

IMPORTANT: If the following steps are not followed, net wrap feeds continuously while the next bale is formed.

24. Connect the monitor-controller power plug to the tractor convenience outlet. Turn the tractor ignition key to the ON position. Set the monitor-controller selector switch to NET.
25. To return the net knife arms to the home (forward) position, press the WRAP key.
26. Turn the tractor ignition key to the OFF position and remove key. Turn the monitor-controller OFF.

DP99999,0000D50-19-14SEP17

Release Net Wrap Feed Roll Brake

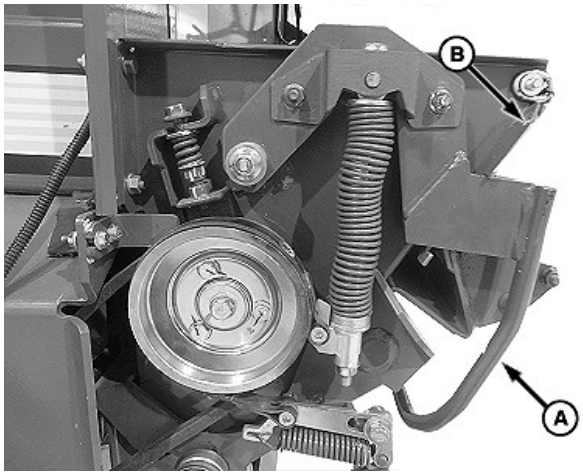

E82332—UN—01MAR17

A—Brake Lever
B—Latch

The manual brake release disengages the net feed rolls. Release the brake when threading net wrap or servicing the net wrap unit.

1. Disengage the tractor PTO, shut off the tractor engine, and disconnect the monitor-controller power plug from the tractor convenience outlet.
2. Open the net wrap cover.
3. To disengage the feed roll brake, pull brake lever (A) out and up to rest on latch (B).
4. To engage the net wrap brake, return lever (A) to the engaged position.
5. Close the net wrap cover.
6. Reconnect the monitor-controller power plug to the tractor convenience outlet.

DP99999,0000D51-19-13SEP17

Correct Net Wrap Wrapping on Rubber Drive Roll

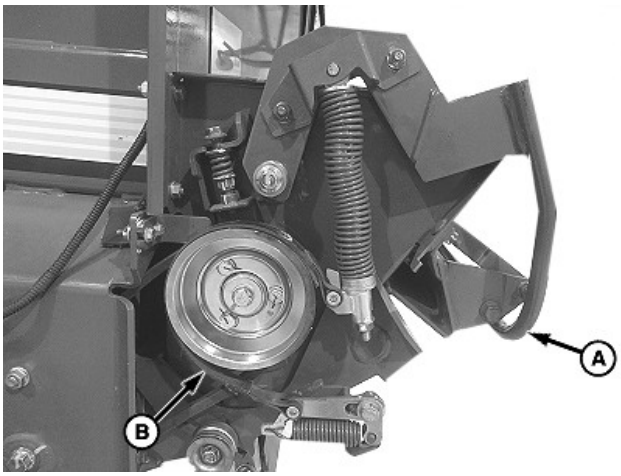

E82219—UN—22FEB17

A—Lever
B—Brake Band

1. Disengage the tractor PTO, shut off the tractor engine, and disconnect the monitor-controller power plug from the tractor convenience outlet.
2. Open the net wrap cover.
3. Pull the brake lever (A) out and up to rest on top of the latch tab to disengage the brake band (B).

IMPORTANT: Do not cut net wrap material from the rubber feed roll. Any knife cuts in the rubber roll covering can result in more frequent wrapping around the rolls and can require roller replacement.

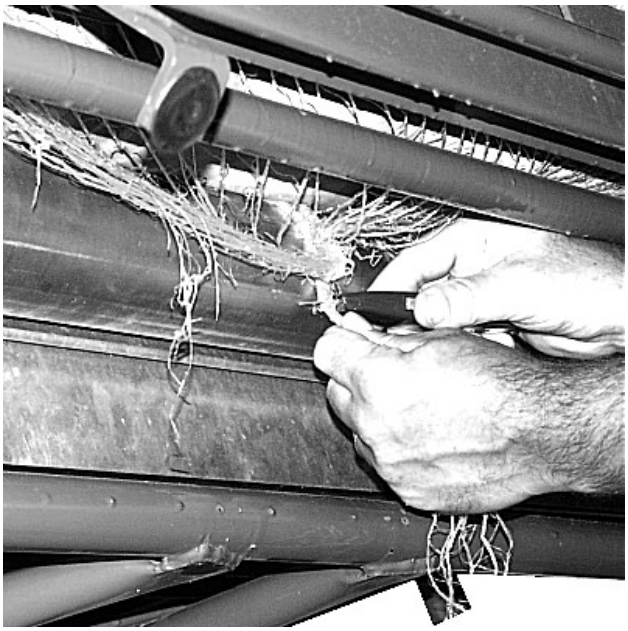

E83035—UN—12MAY17

4. Pull the net wrap material away from the supply roll and the steel roll. Cut the net wrap material. Remove and discard all of the wrapped material, including all strings and staples.
5. Wipe off the rubber drive roll and check for any sticky material. If necessary, the roll can be washed with soap and water. NEVER use solvents to clean the rubber roll. Allow rolls to dry before threading or wrapping of the net on the rubber roll can occur again.
6. Thread net wrap material. (See LOAD NET WRAP MATERIAL in Preparing Baler for Net Wrap section.)
7. If static electricity or dampness causes net wrap material to cling to the rolls, dust the rubber drive roller with granular oil absorbent.

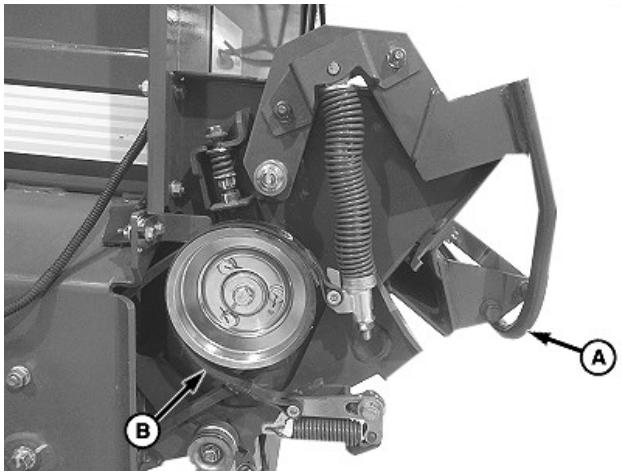

E82219—UN—22FEB17

A—Lever
B—Brake Band

8. Pull lever (A) out and down towards the front of the machine to engage the brake band (B).
9. Close the net wrap cover.
10. Plug the monitor-controller power plug back into the tractor convenience outlet.

DP99999,0000D4F-19-06SEP17

Correct Net Wrap Feeding Problems

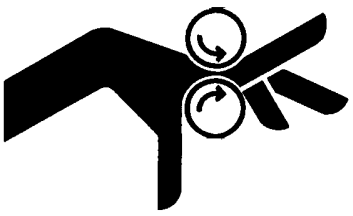

E40200—UN—08JUL96

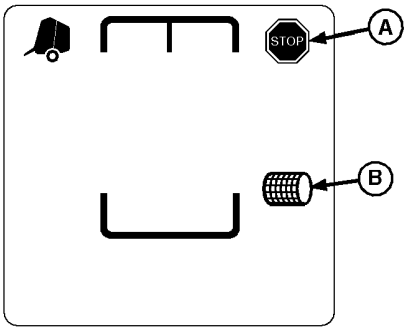

E47600—UN—07JAN00

A—STOP Indicator
B—NET WRAP Indicator

If the net material does not feed properly or if the knife does not cut the net, the STOP (A) and NET WRAP (B) indicators are displayed on the monitor and the alarm sounds.

- If the net does not feed properly, Code 401 is displayed on the monitor.
- If the knife does not cut the net, Code 402 is displayed on the monitor.

CAUTION: Avoid injury from entanglement in moving rolls. Disengage tractor PTO, shut off tractor, and disconnect monitor-controller power plug before servicing.

To correct net feeding or knife problems, perform the following:

- Check for net material looped away from the steel roll and contacting the counterknife. (See Check for Looped Net Material in this section.)
- Check the brake roller torque. (See Check and Adjust Net Wrap Feed Roll Brake in this section.)
- Check that the gap between the front panel and the rubber feed roll is to specification. Gap must be 3—6 mm (0.12—0.24 in). (See Check Front Sheet to Rubber Roll Clearance in this section.)
- Check for cuts or nicks on the rubber feed roll that can make net material stick to the rubber roll. (See Repair Cuts on Rubber Feed Roll in this section.)
- Check for long or uneven tails of net material after cut-off. (See Adjust Net Wrap Counterknife and Sharpen Net Wrap Knife in this section.)
- Remove and clean the brush. Dirt fills the brush and prevents clean cuts. (See Install and Adjust Net Wrap Brush in this section.)
- Check that the net pan is touching both outside belts and at least two of the four center belts. (See Check and Adjust Net Pan Pressure in this section.)
- Check that the counterknife is raising high enough to let the net flow. (See Check and Adjust Net Wrap V-Belt Idler Tension in this section.)
- Check for contact between idler bolt head and bolt head after making net wrap pan adjustment. (See your John Deere dealer or qualified service provider.)
- Check for pin wear in the oval slot below the steel roll in the net wrap side sheets. (See Check Hole Wear in Surface Wrap Side Panel in this section.)

DP99999,0000E03-19-27NOV17

Check for Looped Net Wrap Material

Net material looped above the counterknife angle after cut-off can get pinched between the front sheet and the rubber roll when the counterknife angle is raised.

Looping net material is caused from the brake not quickly stopping the roll of net material.

E82721—UN—02MAY17
Net Material Against Steel Roll

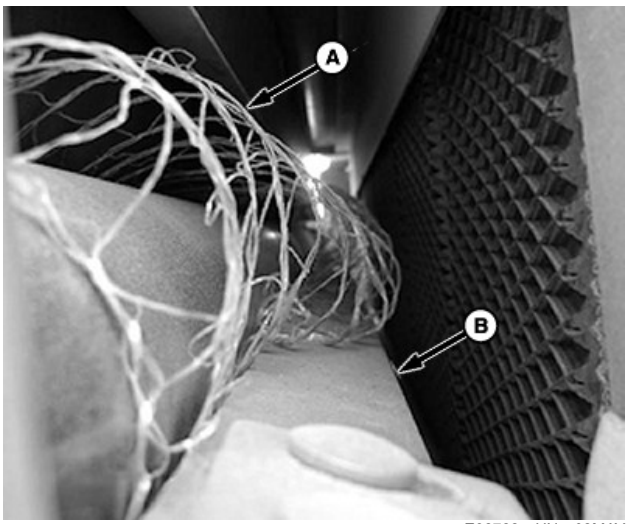

E82722—UN—02MAY17
Looped Net Material Above Counterknife Angle

A—Net Material
B—Counterknife Angle

1. Make a bale and apply net wrap.

2. Shut off the tractor engine and remove ignition key.
3. Open the net wrap cover.
4. Perform a visual check from the right-hand side of the baler.
   - If net material (A) is against the steel roll as shown, the surface wrap is performing acceptably.
   - If net material is looped over the counterknife angle (B), brake torque can be too low. (See CHECK AND ADJUST NET WRAP FEED ROLL BRAKE in this section.

DP99999,0000D3B-19-23AUG17

Check Front Sheet-to-Rubber Roll Clearance

1. Open the net wrap cover. Ensure that the brake lever is engaged.
2. Remove net material.
3. Turn the tractor ignition key to the ON position. Turn the monitor-controller ON.
4. Ensure that the monitor is in the NET mode. Turn the monitor OFF.

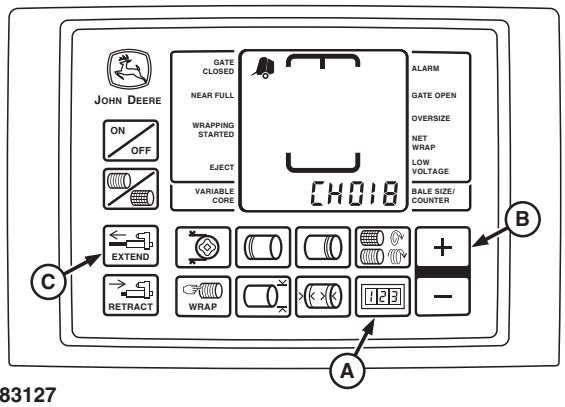

E83127

E83127—UN—11MAY17

A—COUNTER Key
B—PLUS Key
C—EXTEND Key

5. Press and hold the COUNTER key (A) while turning the monitor-controller ON. CH001 appears on the display.
6. Continue to hold the COUNTER key and press the PLUS key (B) to advance to **CH018**. Release the COUNTER key.
7. Press and hold the EXTEND key (C) to move the counterknife to the up position.

CAUTION: To avoid personal injury from unexpected knife movement, disconnect net wrap actuator wire connector or power plug when performing adjustment or working in area.

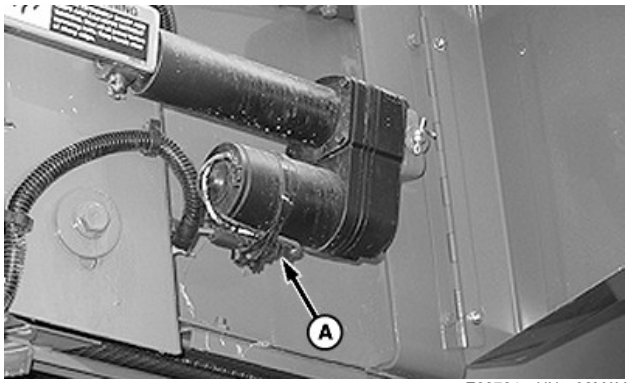

E82724—UN—02MAY17

Wrap Actuator

A—Connector

8. Turn the monitor-controller OFF. Turn the tractor ignition key to the OFF position and remove key. Disconnect the monitor-controller power plug from the power source or disconnect the net wrap wire harness connector (A).

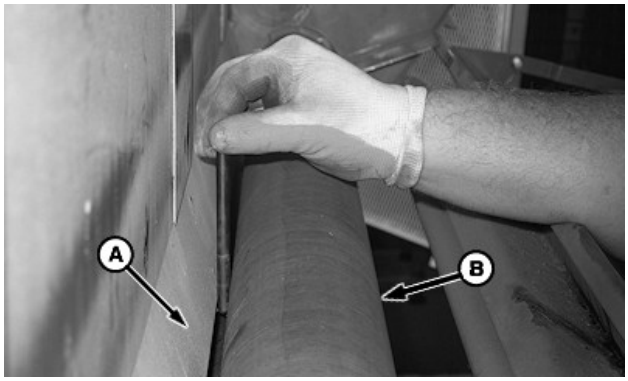

E57351—UN—19JUN09

A—Front Sheet
B—Rubber Roll

9. Check the clearance between the front sheet (A) and entire length of rubber roll (B) with drill bits.

Specification

Front Sheet-to-Rubber Roll—Clearance. . . . . 3—6 mm (0.12—0.24 in)

10. If the clearance is not within specification, bend front sheet to obtain 3—6 mm (0.12—0.24 in) clearance. (See your John Deere dealer.)

DP99999,0000D3C-19-11MAY17

Repair Cuts on Rubber Feed Roll

NOTE: Horizontal (length wise) cuts on rubber feed roll can cause net wrap to be pinched in cut and wrap around feed rolls. This procedure will fix the cut so net wrap will not be pinched in cut. If damage to feed roll is excessive, feed roll must be replaced.

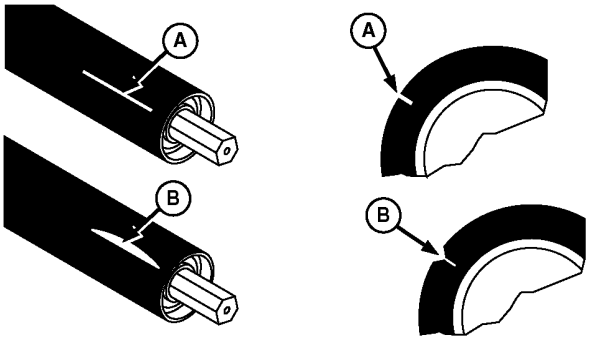

E42638—UN—10APR97

A—Horizontal Cuts
B—V Groove

1. Locate horizontal cut (A) on rubber feed roll.
2. Use a sharp knife to cut along side the existing cut and make a V groove (B) approximately 1 mm (1/32 in.) deep. Be sure to remove all loose pieces of rubber.

   The V groove removes the sharp corners of the cut reducing the possibility of the net wrap being pinched in cut.
3. Repeat Step 2 on opposite side of the cut if necessary or if the cut is directly towards the center of the feed roll.

PP98408,00010F7-19-09JUL13

Check Hole Wear in Surface Wrap Side Panel

Hole wear in surface wrap side panel causes a reduction in brake torque.

1. Open net wrap cover.

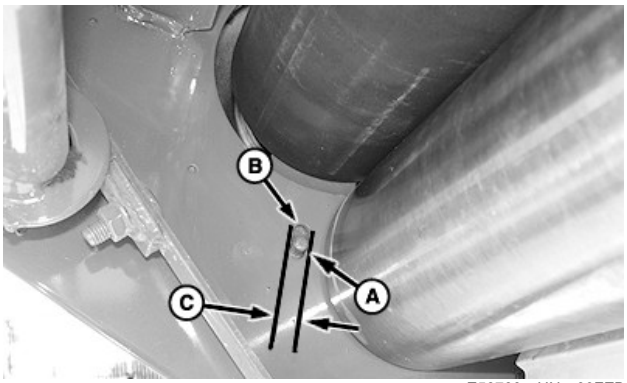

E56760—UN—09FEB09

A—Pin
B—Slotted Hole
C—Slotted Hole Width

2. Perform visual check of rubber feed roll bearing support pin (A) wear in slotted hole (B) on left- and right-hand side panels.
3. If slotted hole width (C) is over 8 mm (0.32 in.), weld key stock to side panels. (See your John Deere dealer.)

PP98408,0001101-19-11FEB13

Check for Bent Rubber Crop Deflectors

NOTE: Bent rubber crop deflectors can prevent the counterknife angle from raising high enough. The net material can wrap the rubber roll or can split near the edge and wrap the number 8 roll spirals.

CAUTION: To avoid personal injury from unexpected knife movement, disconnect the monitor-controller power plug or the net wrap actuator wiring connector when performing adjustment or working in area.

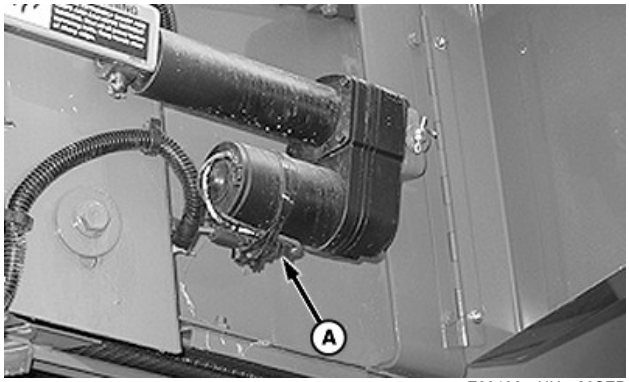

E80106—UN—29SEP15

A—Wiring Harness Connector

1. Turn the monitor-controller selector switch to OFF. Turn the tractor ignition key to the OFF position and remove the key. Disconnect the monitor-controller power plug from the power source or disconnect the wiring harness connector (A) from the net wrap actuator.
2. Open the net wrap cover.

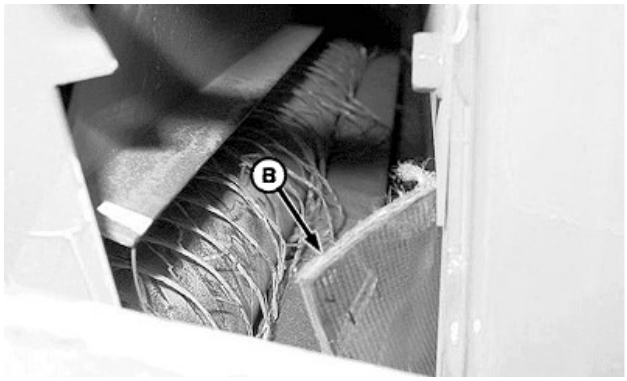

E58059—UN—08OCT09

B—Rubber Crop Deflector

3. Visually check the position of both rubber crop deflectors (B). If either of the crop deflectors are

sticking out between the outside belts and the side sheet of the baler:

- Remove the rubber crop deflectors if not baling cornstalks, milo, or sorghum.
- Reverse or replace the rubber crop deflectors.
- Trim the top edge of the rubber crop deflectors. (See your John Deere dealer.)

DP99999,0000D3F-19-14SEP17

Check for Left-Hand Side Counterknife Contact

If the counterknife angle does not contact the knife on the left-hand side or the net wrap cut is poor on the left-hand side, check for interference between the idler sheave bolt head and the net pan bolt head or the net pan strap.

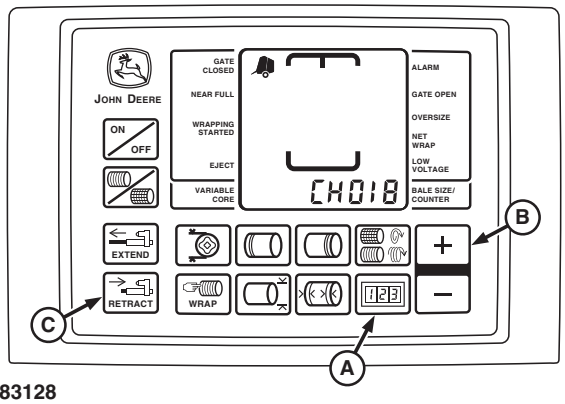

E83128

E83128—UN—11MAY17

BaleTrak™ Pro Monitor

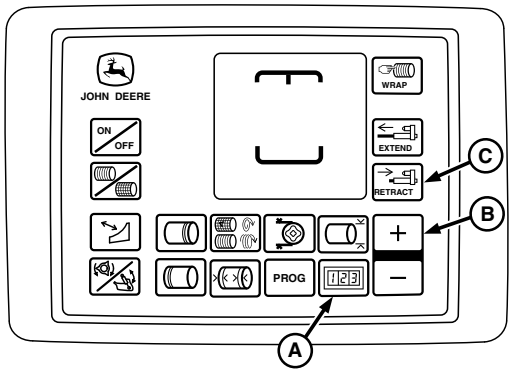

E84424—UN—06SEP17

BaleTrak™ Plus Monitor

A—COUNTER Key
B—PLUS Key
C—RETRACT Key

1. Open the net wrap cover.
2. Engage the net wrap brake.
3. Turn the tractor ignition key to the ON position. Turn the monitor-controller ON.
4. Ensure that monitor is in NET mode. Turn monitor OFF.
5. Press and hold the COUNTER key (A) while turning the monitor-controller ON. **CH001** appears on the display.
6. Continue to hold the COUNTER key and press the PLUS key (B) to advance to **CH018**. Release the COUNTER key.
7. Press and hold the RETRACT key (C) to move the counterknife angle to the down position.

CAUTION: To avoid personal injury from unexpected knife movement, disconnect the net wrap actuator wire connector or power plug when performing adjustment or working in the area.

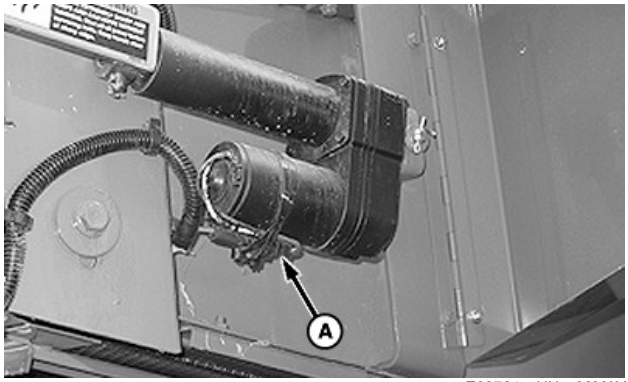

E82724—UN—02MAY17

A—Connector

8. Turn the monitor-controller OFF. Turn the tractor ignition key to the OFF position and remove the key. Disconnect the monitor-controller power plug from the power source or disconnect the net actuator wire harness connector (A).

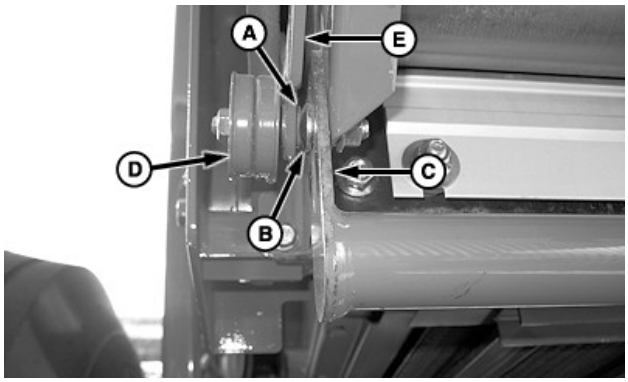

E58064—UN—09OCT09

A—Idler Sheave Bolt
B—Net Pan Bolt
C—Net Pan Strap
D—Idler Sheave
E—Arm

9. Check for contact between the idler sheave bolt head (A) and the net pan bolt head (B) or the net pan strap (C). If there is contact:
   - Grind the net pan bolt head or grind a chamfer at the front edge of the net pan strap.
   - Bend arm (E) out and remove the washer between the idler sheave (D) and the arm if necessary to align the idler sheave with the v-belt.

DP99999,0000D4E-19-06SEP17

Adjust Net Wrap Counterknife

TS268—UN—23AUG88

CAUTION: Knife is sharp and surface wrap cut-off arm can move with out warning. Shut off all power before servicing knife. Keep hands clear of sharp edge.

1. Turn tractor key to ON position. Do not start tractor engine. Press ON or OFF key to turn monitor-controller ON.
2. Press and briefly hold TWINE or NET key to select NET mode.
3. Press WRAP key to cycle surface wrap actuator and move surface wrap cut-off arm to home (downward) position.
4. Turn monitor-controller selector switch to OFF. Turn tractor key to OFF position. Remove key. Disconnect monitor-controller power plug from power source or disconnect plug at surface wrap actuator.
5. Open net wrap cover.

NOTE: Roll removed for photographic purpose only.

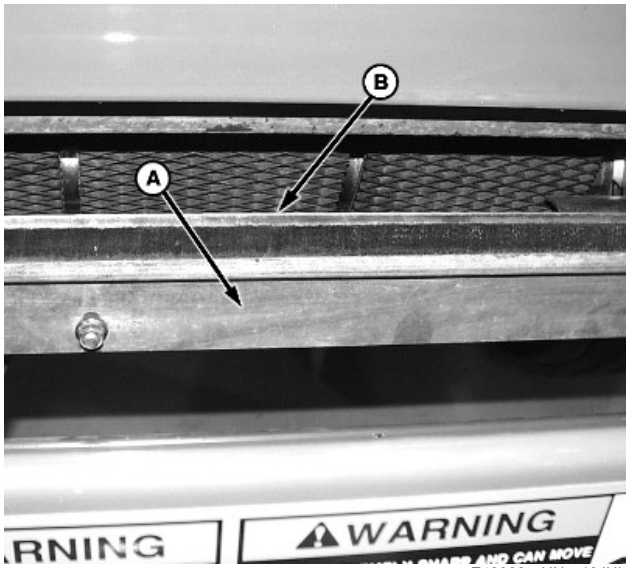

E48362—UN—13JUL00

A—Brush
B—Knife

6. Mark brush mounting positions in order to place brush back in same position. Remove four nuts, washers, and brush. Set hardware and brush aside for later use.
7. Remove brush (A) to see alignment between knife (B) and counterknife.

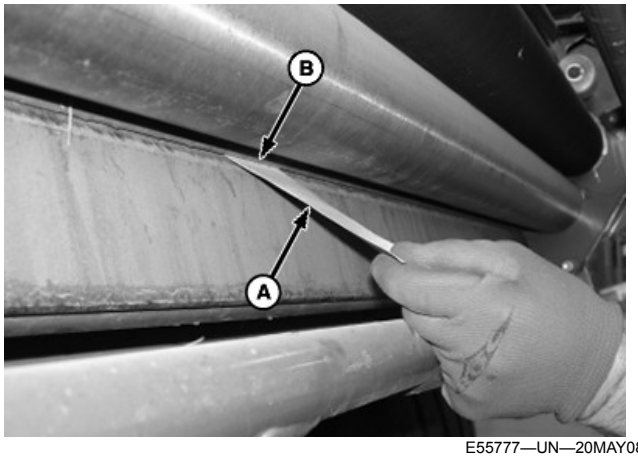

E55777—UN—20MAY08

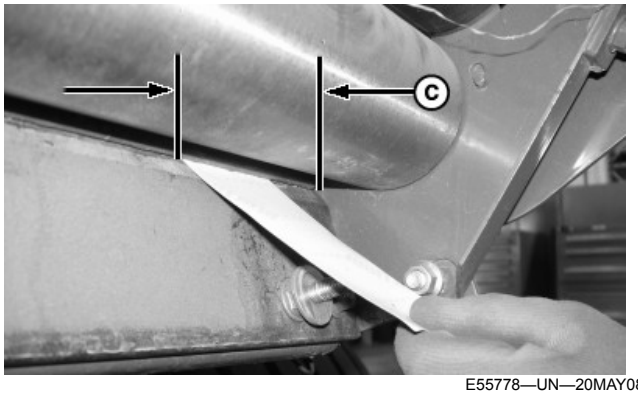

E55778—UN—20MAY08

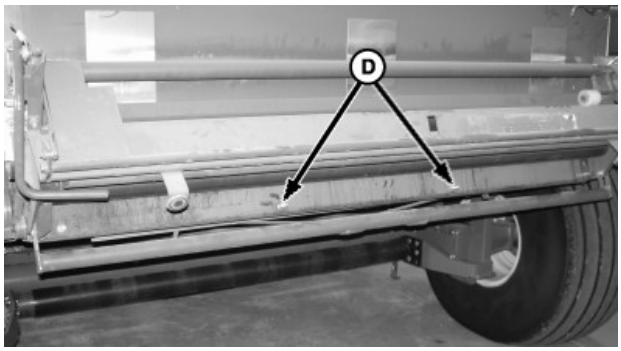

E55788—UN—28MAY08

A—Paper, 50 x 100 mm (2 x 4 in.)
B—Counterknife Angle
C—Area, 102 mm (4.0 in.)
D—Center Knife Bolts (2 used)

8. With a piece of note pad paper (A), approximately 50 x 100 mm (2 x 4 in.), insert paper between counterknife angle (B) and knife bevel in center area of knife. Paper must not pass in at least one point between center bolts (D) holding knife.
9. With paper, check 102 mm (4.0 in.) area (C) at both ends of knife. Paper must not pass in at least one point within the 102 mm (4.0 in.) area.

   If paper passes through any one of the three areas, see the following checks and adjustments in Steps 10—12.

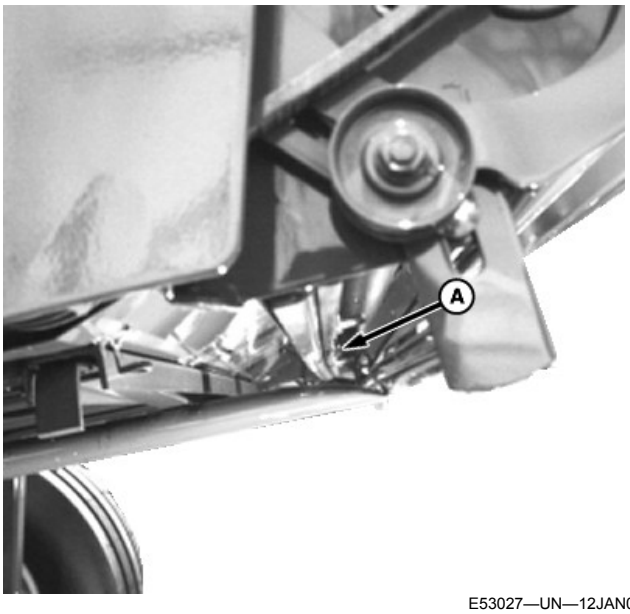

E53027—UN—12JAN04

Knife Bowed to Front

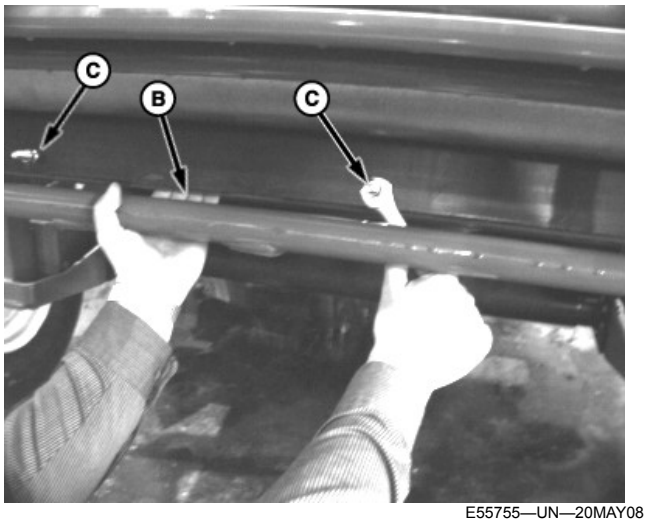

E55755—UN—20MAY08

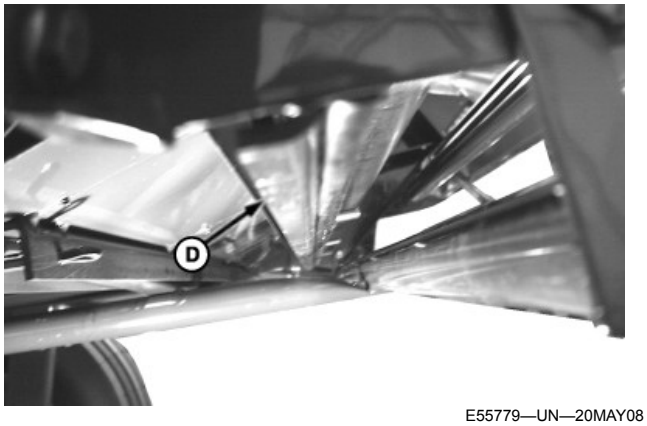

E55779—UN—20MAY08

Knife Bowed to Rear

A—Knife Bowed Toward Front of Baler
B—Hand (Pulling Knife Rearward)
C—Center Nuts
D—Knife Shown Bowed Rearward

10. **Clearance between knife and counterknife angle is excessive:** Paper passes through center area. Both ends are acceptable. A most likely cause is knife (A) is bowed towards front of baler.
    a. Raise counterknife angle to highest position using monitor.
    b. Loosen six nuts that hold knife to mounting bracket.

    IMPORTANT: It is important to maintain straightness of knife (or a slight rearward bow), to get good net cut-off. Hold knife in a slightly bowed position while tightening nuts. Once bolts are tight, knife will remain straight.

    c. Near center of knife, pull knife and support rearward by hand (B) until knife is bowed approximately 2 mm (0.08 in.)

NOTE: Bowing knife rearward more than 4 mm (0.16 in.) can cause center knife angle to catch on knife edge.

d. Tighten center nuts (C) while holding knife in bowed position. Tighten remaining nuts.

e. Recheck knife with straight edge or look down knife from side of baler. Knife must be straight (D) or bowed slightly rearward at center.

f. Recheck counterknife to knife clearance. Repeat Steps 1—4 and 8—10 (a—f).

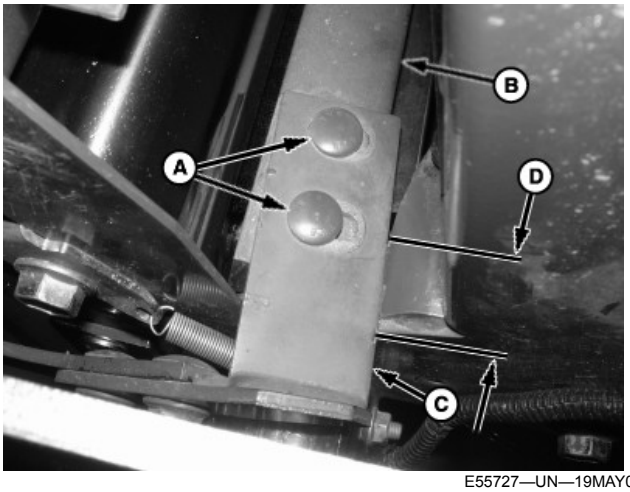

E55727—UN—19MAY08

Knife Bolts, Right-Hand Side

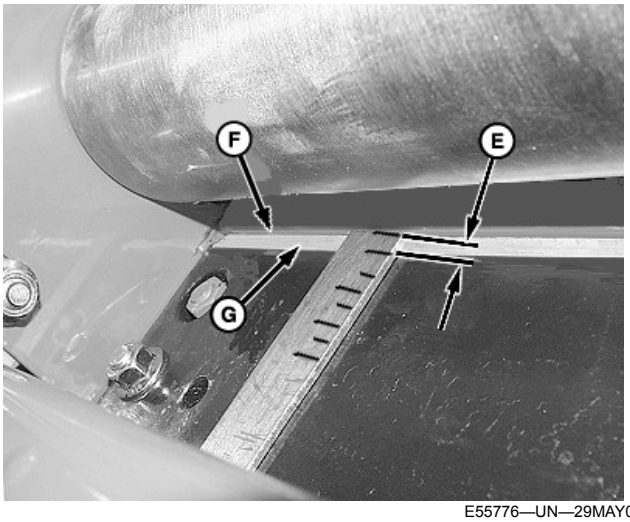

E55776—UN—29MAY08

A—Bolts (2 each side)
B—Counterknife Angle
C—Counterknife Support Arm Support
D—Contact Distance
E—Distance, 6—16 mm (0.24—0.63 in.)
F—Counterknife Angle Edge
G—Knife Bevel

11. **Right-hand side clearance is excessive:** Paper passes through the 100 mm (4.0 in.) area.

    a. With paper, check if right-hand side of counterknife angle (B) or counterknife arm support (C) contacts baler frame. If contact occurs, raise counterknife angle and grind contact area of frame (D) 1—2 mm (0.04—0.8 in.) deep.

    b. If paper still passes through on right-hand side of knife, adjust bolts (A). Mark bolt heads relative to slots as reference. Raise counterknife angle to access bolts (A). Measure distance (E) from counterknife angle edge (F) to rear edge of knife bevel (G). Distance (E) must be 6—16 mm (0.23—0.63 in.) Distance must be the same on both ends of knife.

    c. Recheck with paper at both ends and center. If paper passes through on right-hand side, repeat steps a—c. If paper does not pass in at least one point in the three areas, adjustment is complete.

12. **Left-hand side clearance is excessive:** Paper passes through 100 mm (4.0 in.) area

    a. Ensure that right-hand side is not contacting frame.

    b. If right-hand side contacts frame, raise counterknife angle and grind frame 1—2 mm (0.04—0.08 in.) deep. Lower counterknife angle and recheck both ends and center with paper.

    c. If paper still passes through on left-hand side, adjust bolts holding counterknife angle.

    d. Mark bolt heads relative to slots as reference. Raise counterknife angle to access bolts (A). Measure distance (E) from counterknife angle edge (F) to rear edge of knife bevel (G). Distance (E) must be 6—16 mm (0.23—0.63 in.) Distance must be the same on both ends of knife.

    e. Recheck with paper at both ends and center. If paper passes through left-hand side, repeat steps a—e.

13. If paper checks are acceptable, install and adjust brush. See INSTALL AND ADJUST NET WRAP BRUSH in this section.

14. Connect net actuator wire connector.

IMPORTANT: Make sure to move net wrap counterknife fully downward to home position. If baler is operated with counterknife at the up position, net will feed continuously during baling.

15. Turn tractor key to ON position.

16. Press WRAP key on monitor-controller to move counterknife fully downward to the home position.

17. Turn tractor key to OFF position. Turn off monitor-controller.

18. Close net wrap cover.

PP98408,00010F8-19-09JUL13

Remove and Install Knife

1. Turn tractor ignition key to the ON position. Turn the monitor-controller ON.
2. Ensure that the monitor is in the NET mode. Turn the monitor OFF.

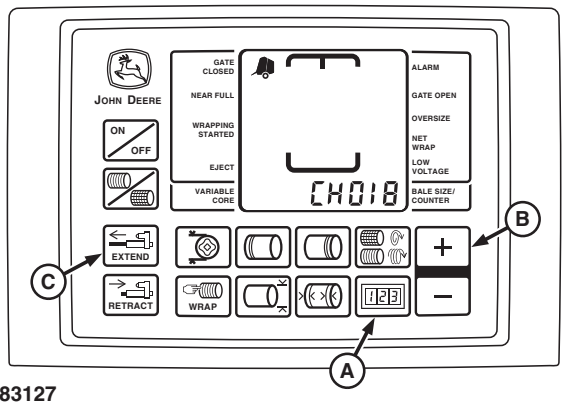

E83127

E83127—UN—11MAY17

BaleTrak™ Pro Monitor

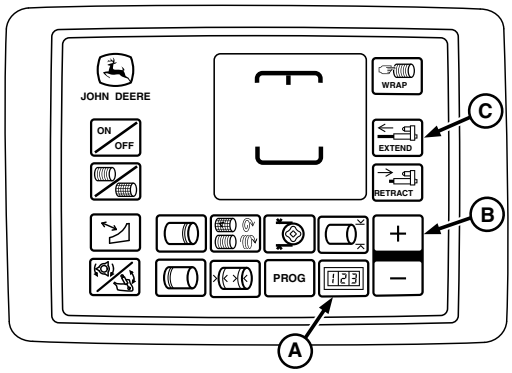

E84425—UN—06SEP17

BaleTrak™ Plus Monitor

A—COUNTER Key
B—PLUS Key
C—EXTEND Key

3. Press and hold the COUNTER key (A) while turning the monitor-controller ON. **CH001** appears on the display.
4. Continue to hold the COUNTER key and press the PLUS key (B) to advance to **CH018**. Release the COUNTER key.
5. Press and hold the EXTEND key (C) to move the counterknife to the up position.

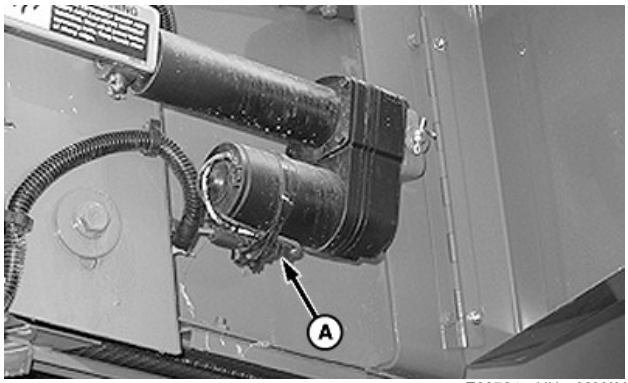

E82724—UN—02MAY17

A—Connector

CAUTION: To avoid personal injury from unexpected knife movement, disconnect the net wrap actuator wire connector or power plug when performing adjustment or working in area.

6. Turn the monitor-controller OFF. Turn the tractor ignition key to the OFF position and remove key. Disconnect the monitor-controller power plug from the power source or disconnect the net wrap wire harness connector (A).

TS268—UN—23AUG88

CAUTION: Cut-off knife is sharp. Wear gloves when handling cut-off knife.

NOTE: Roll removed for illustration only.

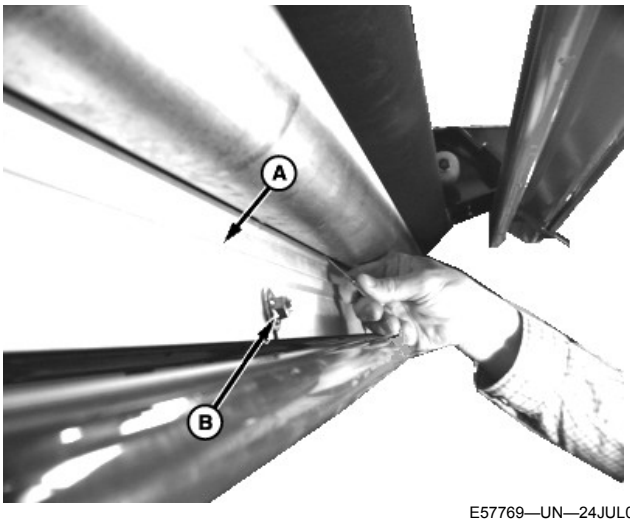

E57769—UN—24JUL09

A—Brush
B—Nuts

7. Remove brush (A) from knife by removing four nuts (B) and washers.

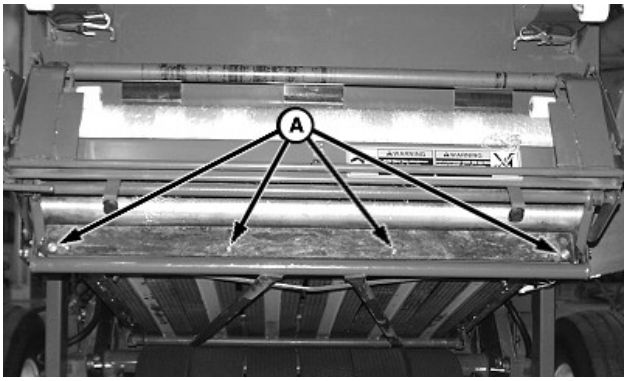

E55845—UN—26JUN08

A—Bolts, Washers, and Nuts

8. Remove four round-head bolts, washers, and nuts (A) on the cut-off knife. Remove knife from the knife bracket.
9. Repair or replace knife as necessary.
10. Install knife with the beveled surface up and facing the rear of machine.
11. Install previously removed round-head bolts, washers, and nuts (A) with the round heads facing the front of the machine. Tighten to specification.

Specification

Knife-to-Knife Bracket—Torque. . . . . 55 N·m (40 lb·ft)

12. Check proper knife-to-counterknife angle contact. (See ADJUST NET WRAP COUNTERKNIFE in this section.)
13. Install brush to knife by using previously removed washers and nuts. Do not tighten at this time.
14. Adjust brush clearance. (See INSTALL AND ADJUST NET WRAP BRUSH in this section.)
15. Connect net actuator wire connector.

IMPORTANT: Make sure to move net wrap counterknife fully downward to home position. If the baler is operated with the counterknife at the up position, net feeds continuously during baling.

16. Turn tractor key to ON position.
17. Press WRAP key on the monitor-controller to move the counterknife fully downward to the home position.
18. Turn tractor key to OFF position. Remove key. Turn OFF monitor-controller.
19. Close net wrap cover.

DP99999,0000D52-19-06SEP17

Sharpen Net Wrap Knife

TS268—UN—23AUG88

E56792—UN—10FEB09

E57765—UN—24JUL09

Cut From Dull Knife

E57767—UN—24JUL09

Smooth Cut From Sharp Knife

NOTE: Sharpen knife when strings of net wrap material or patches of net wrap extend from the knife to gate roll, rubber roll wraps with net, or when knife does not cut the net wrap material.

CAUTION: Knife is sharp. Wear gloves when handling knife.

1. Remove knife. (See REMOVE AND INSTALL KNIFE in this section.)
2. Clamp knife in vise.
3. Using a piece of paper, check knife for sharpness.
   - Apply even pressure and drag paper down edge of knife.
   - Start cut at edge of paper.
   - If knife produces a dull cut, as illustrated, knife edge will need sharpened.

IMPORTANT: Do not use right angle disk grinder or flap disk grinder to sharpen knife. Knife edge damage will occur.

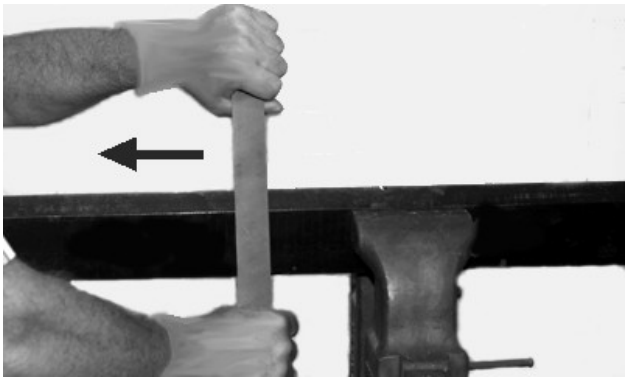

E41644—UN—16OCT96

4. Use a clean sharp flat file to sharpen full length of knife edge. This procedure (like using a draw knife), will produce a sharp knife edge.
5. Remove burr from back side of knife.
6. Repeat paper test along full length of knife edge to verify that full length of knife edge is sharp. A sharp knife will produce a smooth cut as illustrated.
7. Reinstall knife. (See REMOVE AND INSTALL KNIFE in this section.)

PP98408,00010F9-19-11FEB13

Install and Adjust Net Wrap Brush

1. Turn the tractor ignition key to the ON position. Turn the monitor-controller ON.
2. Ensure that the monitor is in the NET mode. Turn the monitor OFF.

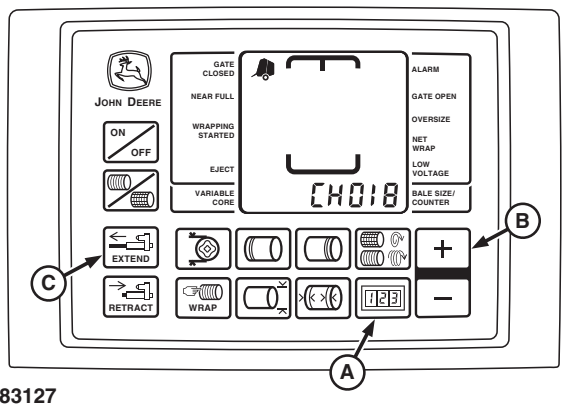

E83127—UN—11MAY17

BaleTrak™ Pro Monitor

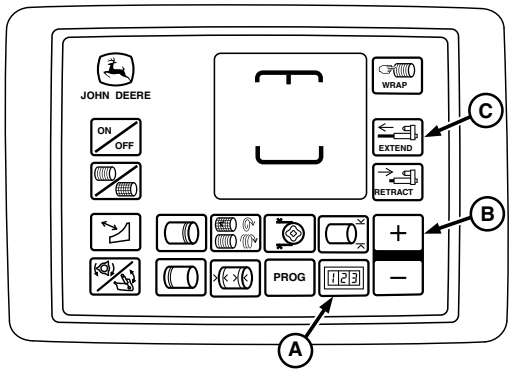

E84425—UN—06SEP17

BaleTrak™ Plus Monitor

A—COUNTER Key
B—PLUS Key
C—EXTEND Key

3. Press and hold the COUNTER key (A) while turning the monitor-controller ON. **CH001** appears on the display.
4. Continue to hold the COUNTER key and press the PLUS key (B) to advance to **CH018**. Release the COUNTER key.
5. Press and hold the EXTEND key (C) to move the counterknife to the up position.

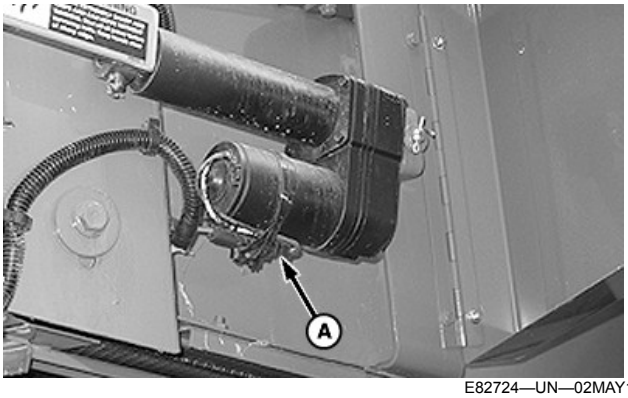

E82724—UN—02MAY17

A—Connector

CAUTION: To avoid personal injury from unexpected knife movement, disconnect the net wrap actuator wire connector or power plug when performing adjustment or working in area.

6. Turn the monitor-controller OFF. Turn the tractor ignition key to the OFF position and remove key. Disconnect the monitor-controller power plug from the power source or disconnect the net wrap wire harness connector (A).
7. Open the net wrap cover.

NOTE: If the knife is bowed, bend the brush away from the steel roll between the center bolts to maintain 1—3 mm (0.040—0.12 in) clearance.

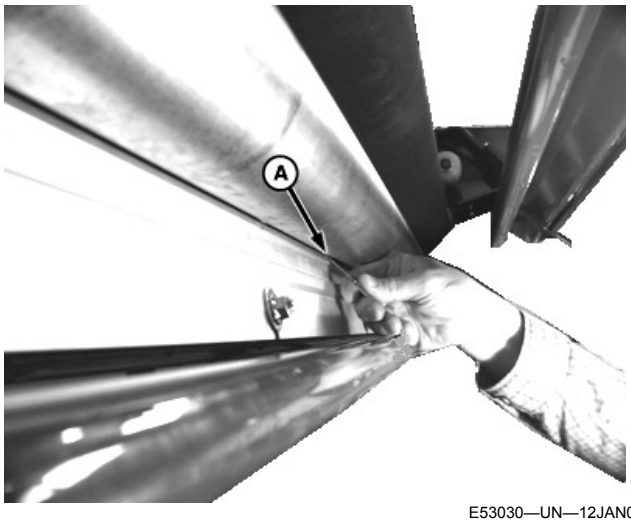

E53030—UN—12JAN04

A—Feeler Gauge

8. Install the brush with the bristle holder offset, towards the plated roll. Using a feeler gauge (A), set the clearance between the steel roll and the aluminum brush holder bracket to specification.

Specification

Brush-to-Steel Roll—Clearance. . . . . 1—3 mm (0.040—0.12 in)

9. Tighten hardware to specification.

Specification

Knife-to-Brush—Torque. . . . . 55 N·m (40 lb·ft)

10. Rotate the rolls to ensure that the clearance remains within specification.
11. Check the net wrap switch adjustment. (See CHECK AND ADJUST NET WRAP SWITCH in this section.)
12. Connect the net actuator wire connector.

IMPORTANT: Make sure to move the net wrap counterknife fully downward to the home position. If the baler is operated with the counterknife at the up position, net feeds continuously during baling.

13. Turn the tractor key to the ON position. Turn the monitor-controller ON.
14. Press the WRAP key on the monitor-controller to move the counterknife fully downward to the home position.
15. Turn the tractor key to the OFF position. Turn the monitor-controller OFF.
16. Close the net wrap cover.

DP99999,0000D3D-19-06SEP17

Check and Adjust Net Pan Pressure

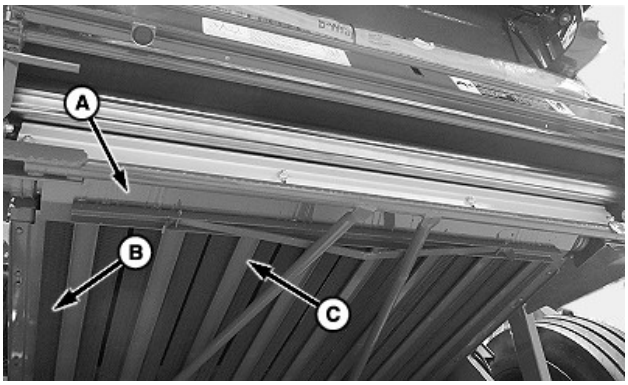

E83228—UN—23MAY17

A—Net Pan Angle
B—Outside Belts
C—Channels

IMPORTANT: Belts must be tight before checking and adjusting net pan pressure.

IMPORTANT: Always adjust belt tracking at No. 9 roll (lower front gate roll) by adjusting No. 8 roll (lower rear gate roll), before checking or adjusting net pan pressure.

Lack of net pan angle (A) and channel (C) contact or pressure can cause net not to be applied (wraps rubber roll) or partially applied to the bale. Net pan angle (A) must contact both outside belts (B) and at least two of the four center belts.

Excessive net pan angle (A) or channel (C) contact or pressure, can cause net feeding difficulties, holes worn in the pan angle, or channels, or the net slitting if heating weakens net.

1. Park tractor and baler on lever surface. Shut off engine and remove ignition key.
2. Remove crop debris inside the gate, near No. 8 and No. 9 rolls, and net pan.
3. Start tractor. With the empty baler, gate lock lever unlocked, and gate closed, engage PTO and move tractor SCV lever to close gate and tension belts.
4. Disengage PTO, shut off the tractor engine, and remove key.

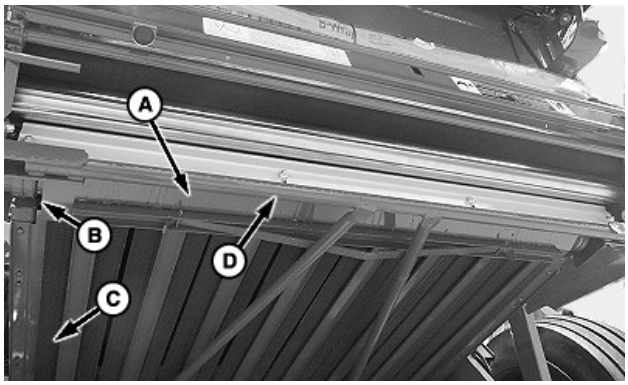

E83229—UN—23MAY17

A—Net Pan Angle
B—Clearance
C—Outside Belts
D—Cross-tube

5. Check that net pan angle (A) is contacting both outside belts (C) and at least two of the four center belts.
   - If net pan is contacting both outside belts and at least two of the four center belts, proceed to Step 6.
   - If clearance (B) exists between the net pan angle (A) and any belt, adjust the cross-tube (D) higher until both outside belts contact and at least two of the four center belts contact. Maintain 22—44 N (5—10 lb) net pan pressure on both sides.
   - If net pan pressure is 22—44 N (5—10 lb) and either one or both outside belts (B) do not contact the net pan angle (A), the net pan angle is bowed too much and should be straightened. (See Check and Straighten Net Pan Angle in this section.)

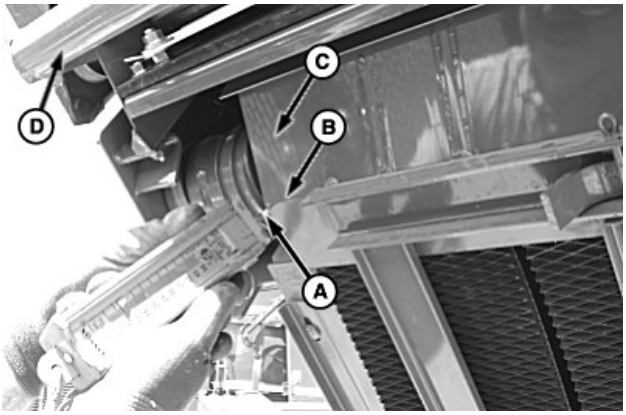

E55324—UN—09JUL07

Gate Partially Open for Illustration

A—Scale Hook
B—Bend in Net Pan
C—Net Pan Angle
D—Cross-tube

6. With a spring scale, engage scale hook (A) at bend (B) in the net pan angle (C).
7. Force must be 22—44 N (5—10 lb) to move net pan away from outside belts.

- If force is less than 22 N (5 lb), move left-hand side of cross-tube (D) up until force is correct. Repeat on the opposite side.
- If force is more than 44 N (10 lb), move left-hand side of cross-tube (D) down until force is correct. Repeat on the opposite side.
- If the cross-tube (D) is in the lowest position and force is more than 44 N (10 lb), adjust net pan pressure. (See Check and Adjust Net Pan Pressure in this section.)

SF04007,0000F40-19-23MAY17

Check and Straighten Net Pan Angle

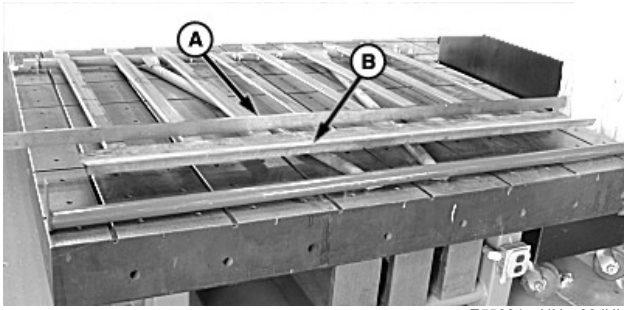

E55331—UN—09JUL07

A—Straight Edge
B—Net Pan Angle

1. Place the net pan on a solid, level surface.
2. Remove the leaf spring by removing cotter pins (one on each end of the leaf spring).
3. Place a straight edge (A) on the net pan angle (B) top (shown) or the channel beneath the net pan angle.
4. The net pan angle can be bowed up to 2.5 mm (0.10 in).

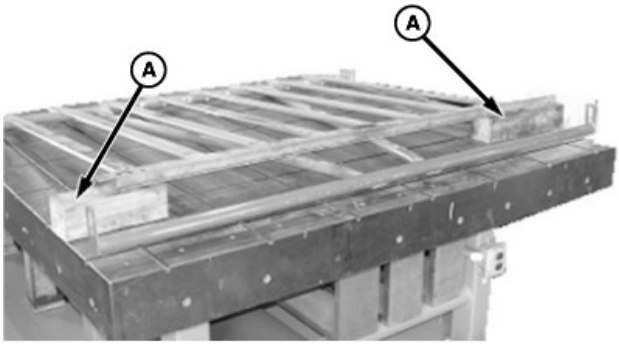

E83031—UN—05MAY17

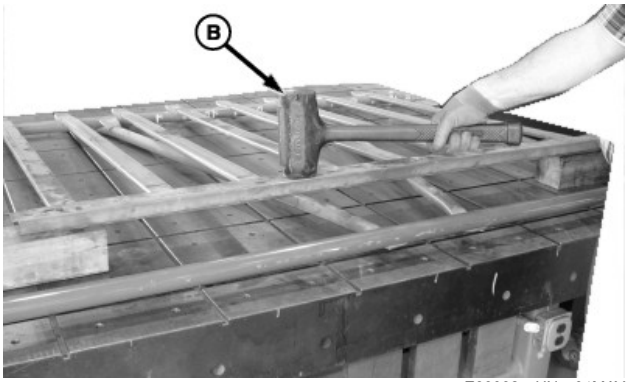

E83032—UN—04MAY17

A—Block (2 used)
B—Hammer

5. If bow is high in the middle, place blocks (A) under each end and push down, or use a dead blow hammer (B) in the middle of the net pan angle to straighten.
6. Adjust the net pan pressure. (See CHECK AND ADJUST NET PAN PRESSURE WITHOUT LEAF SPRING in this section.)

DP99999,0000D3E-19-03MAY17

Check and Adjust Net Pan Pressure without Leaf Spring

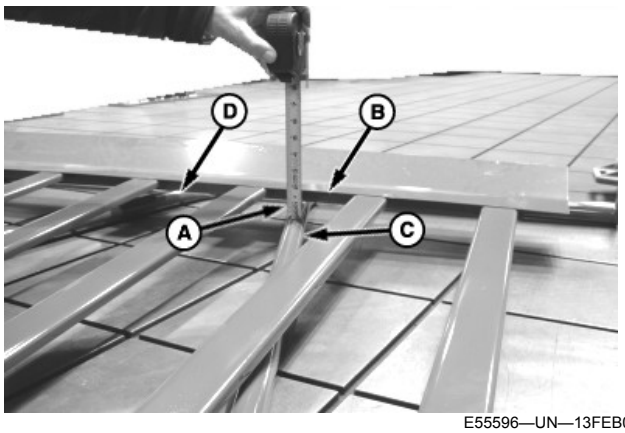

E55596—UN—13FEB08

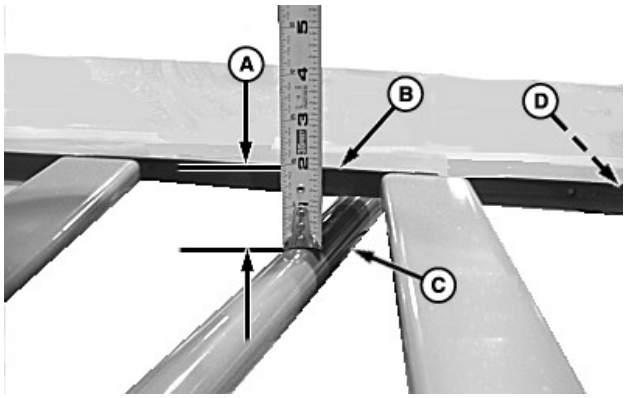

E55595—UN—13FEB08

Left-Hand Pan Tube Shown

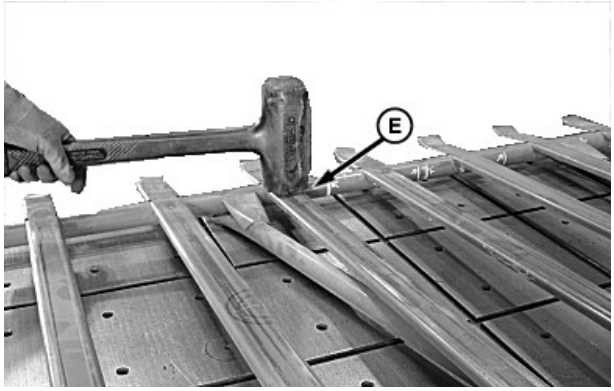

E55597—UN—13FEB08

A—Distance, 52 ± 5 mm (2.0 ± 0.2 in.)
B—Net Pan Angle
C—Support Tube
D—Support Tube
E—Net Pan Channel (near front crossbar)

1. Remove net pan from baler. (See NET WRAP USE AFTER EXTENDED STORAGE in this section.)
2. Remove leaf spring by removing cotter pins. Lay net pan flat on a level surface.
3. Measure distance (A) between top of net pan angle (B) and top of both support tubes (C) and (D). Distance (A) must be 52 ± 5 mm (2.0 ± 0.2 in.).
   - If distance (A) is more than 57 mm (2.2 in.), use a dead blow hammer and tap on each net pan channel (E) near front crossbar. Recheck distance (A) and repeat as needed.
   - If distance (A) is less than 47 mm (1.8 in.), place net pan on floor. Step on net pan rear crossbar near center and lift net pan angle (B) to bend channels. Recheck distance (A) and repeat at needed.
4. Straighten net pan angle. (See CHECK AND STRAIGHTEN NET PAN ANGLE in this section.)
5. Install leaf spring and net pan in reverse order as removed. After installing net pan:
   - See CHECK AND ADJUST LOWER NET WRAP GUIDE
   - See CHECK BELT TRACKING
   - See CHECK AND ADJUST NET PAN PRESSURE

PP98408,00010FD-19-09JUL13

Check and Adjust Net Wrap Feed Roll Brake

TS268—UN—23AUG88

CAUTION: Prevent injury to others. Ensure that bystanders stand clear before operating the surface wrap unit.

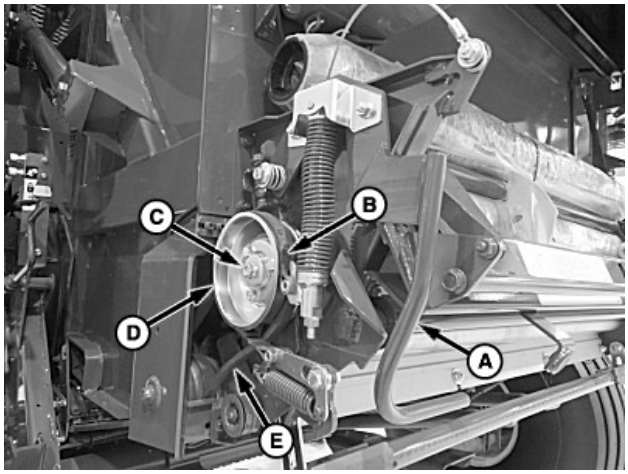

E83522—UN—16JUN17

A—Lever
B—Brake Band
C—Cap Screw
D—Sheave
E—V-Belt

1. Open the net wrap cover.
2. Move brake lever (A) out and up to rest on the latch tab and release the brake band (B).

NOTE: To aid in assembly, record the location and number of shims on both sides of the sheave.

3. Remove the cap screw (C), washer, shims, sheave (D), and V-belt (E).
4. Connect the monitor-controller power plug to the convenience outlet on the tractor.
5. Turn the tractor ignition key to the ON position. Do not start the tractor engine.
6. Press and hold the COUNTER key while turning the monitor-controller ON. Verify that **CH001** appears on the display.
7. Continue to hold the COUNTER key and press the

PLUS key until **CH018** appears in the display. Release the COUNTER key.

8. Press and hold the EXTEND key until the net wrap actuator extends the counterknife angle to the highest position.

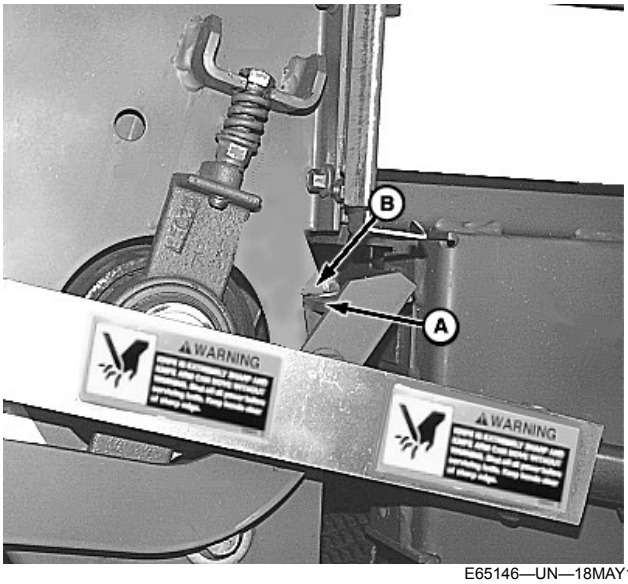

E65146—UN—18MAY12

Cut-off Arm (Right-Hand Side)

A—Cut-off Arm
B—Tab

9. Check the position of the right-hand net wrap cut-off arm (A). The arm must contact the tab (B) FIRMLY. If the arm is positioned correctly, proceed to the next step. If the position is not correct, adjust the base end of the mounting bracket as follows to obtain a firm contact:

CAUTION: Avoid personal injury from an unexpected knife movement. Disconnect the net wrap actuator connector or power plug when adjusting or working in the area.

a. Turn the tractor ignition key to the OFF position.

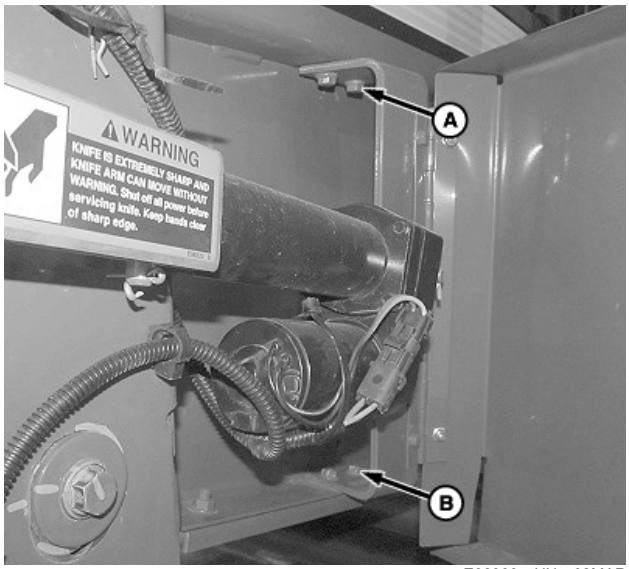

E82308—UN—02MAR17

A—Cap Screw (2 used)
B—Carriage Bolt (2 used)

b. Loosen the cap screws (A) on top of the bracket and the carriage bolts (B) on the bottom end of the bracket.

c. Turn the tractor ignition key to the ON position.

d. Press the RETRACT key and retract the counterknife angle to the shortest position. Tighten the bracket mounting bolts.

e. Extend the actuator and recheck for a firm contact.

f. Retract the actuator fully.

g. Turn the tractor ignition key to OFF and remove the key.

IMPORTANT: Install sheave shims as removed. Move shims from inner to outer side of sheave as necessary for proper sheave alignment.

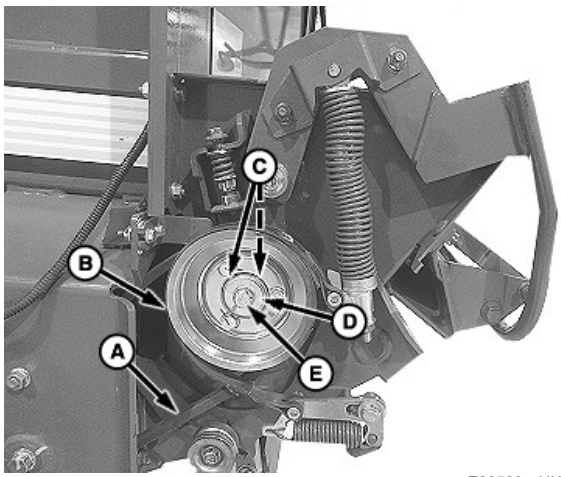

E83523—UN—16JUN17

A—V-Belt
B—Sheave
C—Shim

D—Washer
E—Cap Screw

10. Install the V-belt (A), sheave (B), shims (C), washer (D), and cap screw (E). Tighten the cap screw to specification.

Specification

Feed Roll Sheave Cap Screw—Torque. . . . . 40 N·m (30 lb·ft)

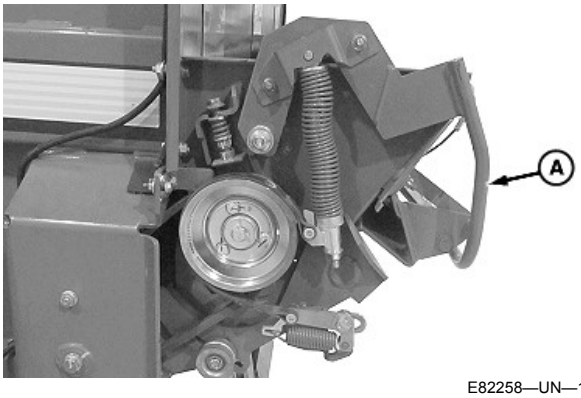

E82258—UN—15FEB17

Brake Shown Disengaged

A—Brake Lever

11. Disengage the net wrap brake lever (A) by placing the lever on top of the lock tab.
12. Remove the net wrap from between the rolls.
13. The knife arm must be fully down.
14. Verify that the rubber and steel rolls are clean.
15. Check that the brake band and V-belt sheave are clean and dry.
16. Ensure that the rubber and steel rolls turn freely with the brake lever disengaged.
17. Engage the feed roll brake to the sheave by lowering the brake lever to the bottom of the lock tab.

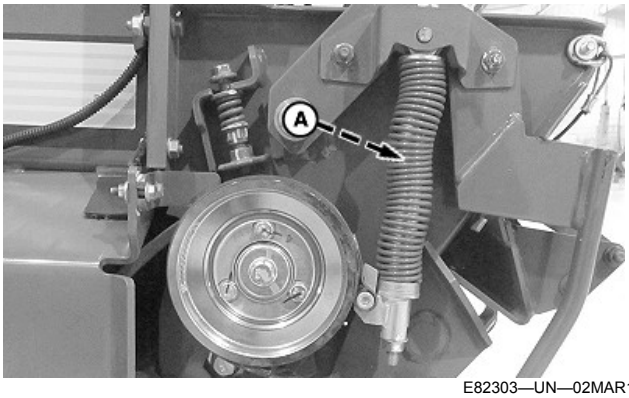

E82303—UN—02MAR17

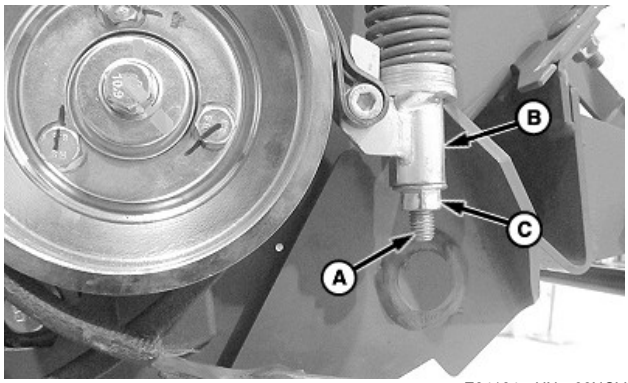

E84164—UN—06NOV17

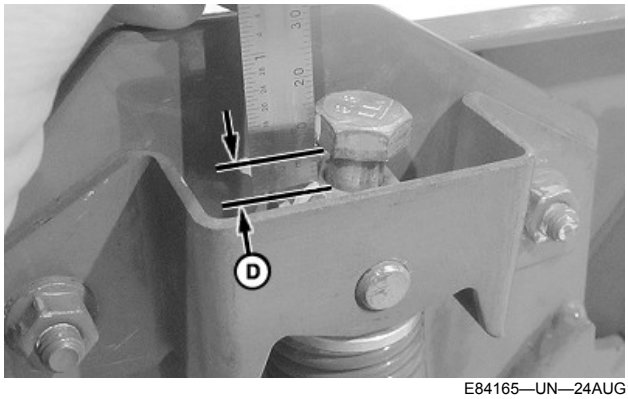

E84165—UN—24AUG17

A—Timing Bolt
B—Tension Tube
C—Lock Nut
D—Timing Bolt Gap

18. The timing bolt (A) adjusts the spring tension to control brake performance. To ensure that the net feed roll brake is applied at the proper time at the end of the wrap application cycle, the timing bolt must be properly adjusted. Incorrect adjustment can result in net material feeding problems.

    To check for proper brake adjustment, measure the timing bolt gap (D) between the bottom of the timing bolt head and the top surface of the spring plug. Gap must be within specification.

Specification

Timing Bolt Gap (D)—Distance. . . . . 1.5—6 mm (0.059—0.236 in)

IMPORTANT: Do not adjust the timing bolt before loosening the lock nut, or damage to the brake can result.

NOTE: The functional range of the timing bolt gap is 1.5—6 mm (0.059—0.236 in).

19. If the timing bolt gap is not within specification, adjust as follows:
    a. Loosen lock nut (C) while holding the tension tube (B) using the wrench flats.
    b. Turn the timing bolt (A) until the gap (D) is within specification.

c. Tighten the lock nut (C) against the tension tube (B) while holding the tension tube using the wrench flats.

E82721—UN—02MAY17

Photo 1—Timing is Correct (Net Wrap Material is Snug Against Steel Roll)

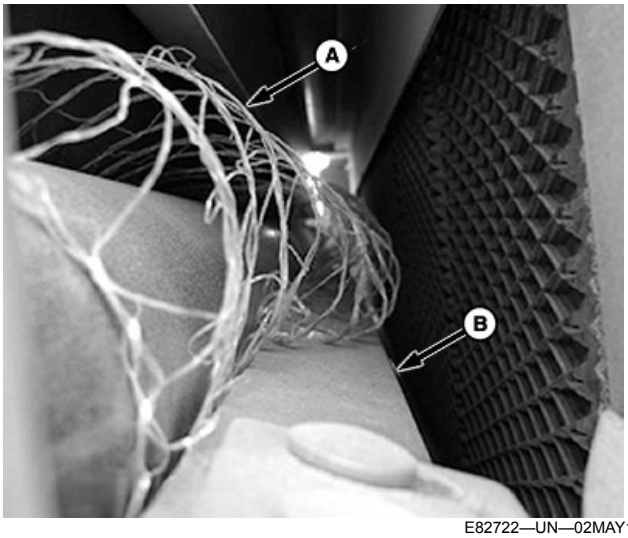

E82722—UN—02MAY17

Photo 2—Timing is Late (Net Wrap Material is Looped Above Counterknife)

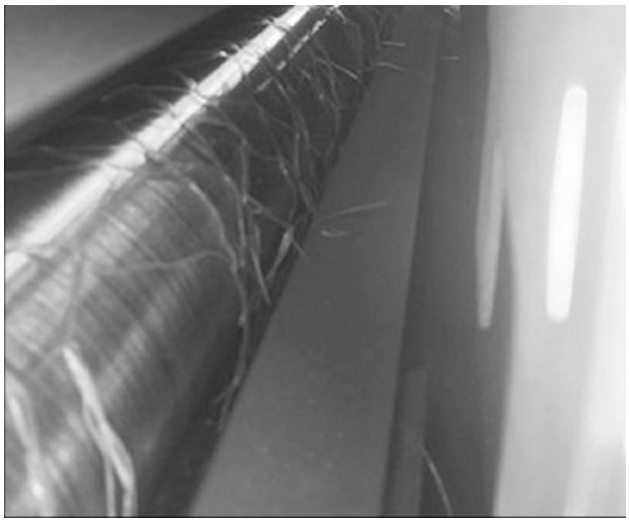

E83751—UN—05JUL17

Photo 3—Timing is Early (Broken Net Material Has Snapped Back)

A—Net Wrap Material
B—Counterknife

20. Verify that the net wrap material is feeding properly:
    - When the brake timing is correct, the net material (A) is snug against the steel roll as shown in **Photo 1**.
    - If the brake timing is too late, a loop of net can develop above the counterknife (B). The material can get pinched between the front sheet and the rubber roll and cause feeding issues as shown in **Photo 2**. Adjust the timing bolt to specification.
    - If the brake timing is too soon, net snap back can occur and can result in feeding issues as shown in **Photo 3**. Adjust the timing bolt to specification.

IMPORTANT: After adjustments are made, return the net knife arms to the home position by selecting the WRAP key. Turn the ignition key OFF to cancel the STOP alarm. If this procedure is not followed, net feeds continuously while the next bale is formed.

21. Turn the tractor ignition key to the ON position.
22. Cycle the net wrap actuator by selecting the WRAP key. The counterknife must be at the home (downward) position.
23. Turn the tractor ignition key to the OFF position. Remove the key.

SF04007,0001228-19-20AUG18

Remove and Install Net Wrap V-Belt

1. Lock the gate.
2. Start the tractor and raise the tension arm fully using tractor hydraulics.

3. Turn the tractor ignition key to the off position and remove the key.
4. Disconnect the monitor-controller power plug from the tractor convenience outlet.
5. Open the net wrap cover.
6. Place a support under the drive roll to help support weight of roll.

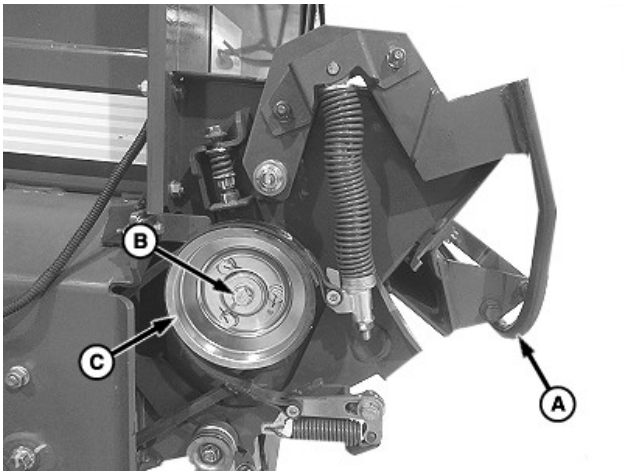

E84242—UN—24AUG17

A—Brake Lever
B—Cap Screw and Washer
C—Sheave

7. Raise the brake lever (A) to rest on the latch tab.
8. Remove cap screw and washer (B) and sheave (C).

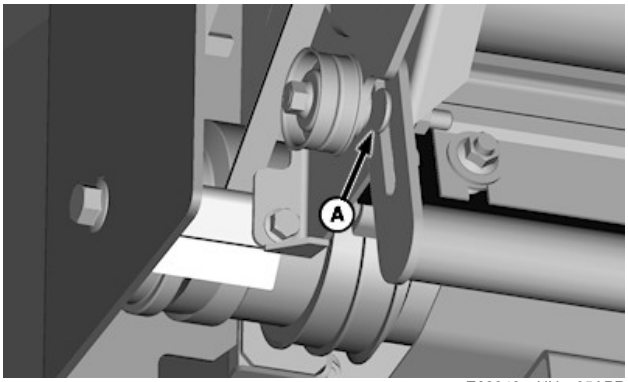

E62348—UN—05APR12

Left-Hand Side

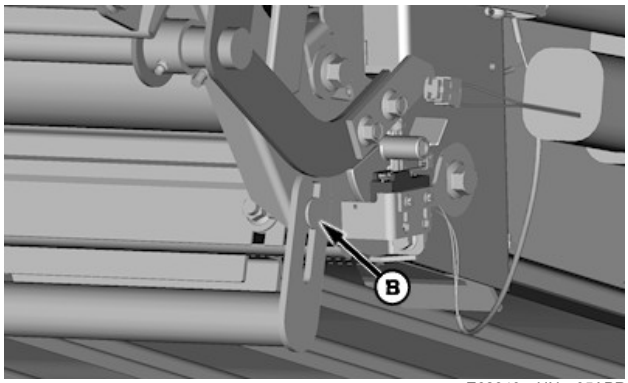

E62349—UN—05APR12

Right-Hand Side

A—Carriage Bolt
B—Carriage Bolt

9. Remove carriage bolts (A and B) on the ends of the cross-tube and lower the net pan.

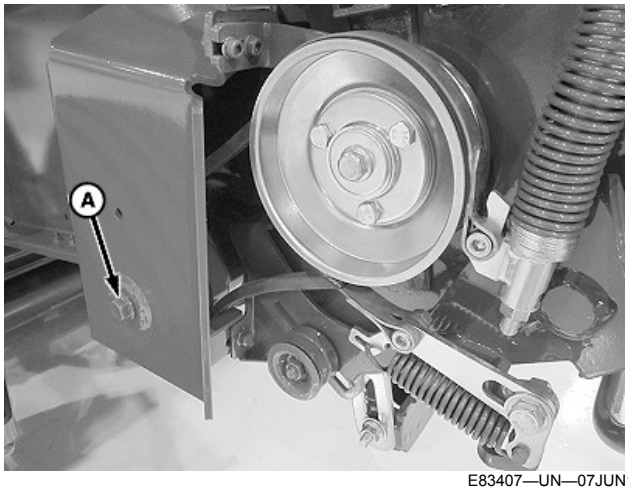

E83407—UN—07JUN17

Left-Hand Side

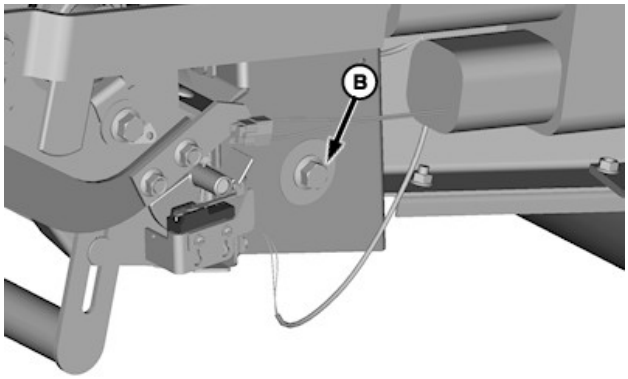

E62356—UN—05APR12

Right-Hand Side

A—Cap Screw
B—Cap Screw

10. Remove cap screw (A).
11. Loosen cap screw (B) until the roll on the left-hand side drops enough to remove the v-belt.

12. Replace the v-belt and install in reverse order of removal.
13. Check and adjust the net wrap v-belt idler tension. (See CHECK AND ADJUST NET WRAP V-BELT IDLER TENSION in this section.)
14. Check the net pan pressure. (See CHECK AND ADJUST NET PAN PRESSURE in this section.)

DP99999,0000D53-19-15SEP17

Check and Adjust Net Wrap V-Belt Idler Tension

TS268—UN—23AUG88

CAUTION: Protect bystander. To prevent injury, be sure that bystanders stand clear before operating the net wrap unit or baler.

1. Connect the monitor-controller power plug to the tractor convenience outlet.
2. Turn the tractor ignition key to the ON position. Do not start the tractor engine.
3. Press and hold the COUNTER key while turning the monitor-controller ON. Verify that **CH001** appears on the display.
4. Continue to hold the COUNTER key and press the PLUS key until **CH018** appears in the display. Release the COUNTER key.

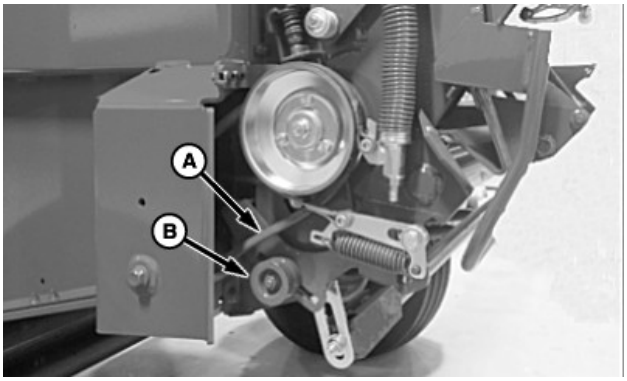

E84231—UN—24AUG17

A—V-Belt
B—Idler Pulley

5. Press the EXTEND or RETRACT key on the monitor until the actuator moves approximately half way up or down and loosens the V-belt (A).

CAUTION: To avoid personal injury from unexpected knife movement, disconnect the actuator wire connector or power plug when performing adjustment or working in the area.

6. Temporarily move the V-belt from the top of the idler pulley (B) to the underside of the pulley.
7. Reconnect the power source.
8. Press and hold the COUNTER key while turning the monitor-controller ON. Verify that **CH001** appears on the display.
9. Continue to hold the COUNTER key and press the PLUS key until **CH018** appears in the display. Release the COUNTER key.
10. Press the mode selector switch and place the monitor-controller in the NET mode.
11. Press and hold the EXTEND key until the actuator extends the counterknife angle to the highest position.

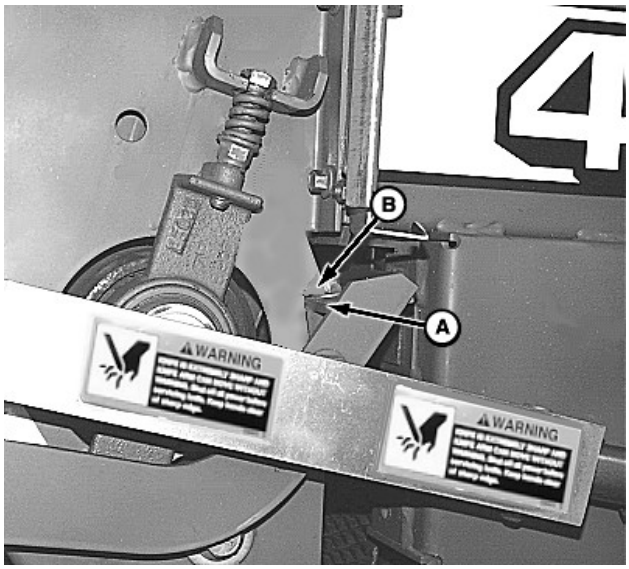

E51045—UN—03JAN02

A—Cut-off Arm
B—Tab

12. Check the position of the right-hand cut-off arm (A). The arm must contact the tab (B) firmly. If the arm is positioned correctly, proceed to the next step.

    If the position is not correct, adjust the base end of the mounting bracket as follows to obtain a firm contact:

    a. Turn off the monitor-controller and disconnect the power plug from the power source.

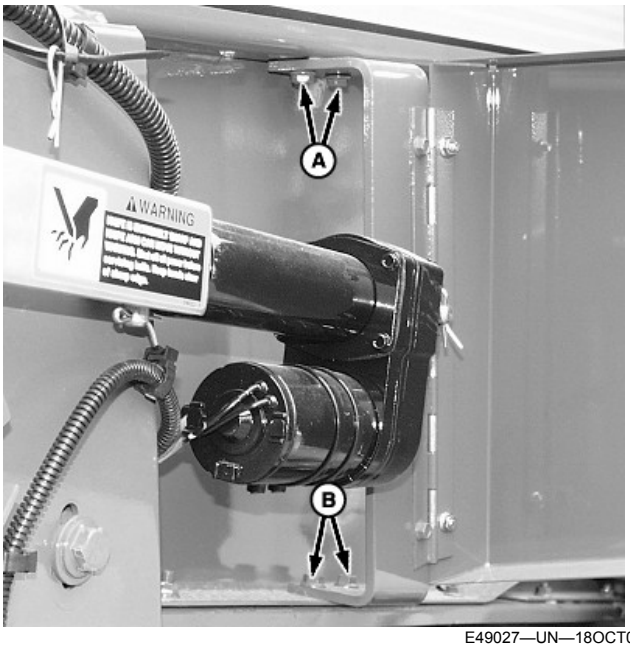

E49027—UN—18OCT00

A—Cap Screw (2 used)
B—Carriage Bolt (2 used)

b. Loosen the two cap screws (A) on the top end of the bracket and the two carriage bolts (B) on the bottom end of the bracket.

c. Connect the monitor-controller power plug to the power source. Turn on the monitor-controller and access channel 018.

d. Press the RETRACT key and move the counterknife angle to the shortest position.

e. Tighten the cap screws and carriage bolts on the actuator bracket.

f. Extend the actuator and recheck for a firm contact.

13. Press the EXTEND or RETRACT key and return the actuator to approximately half way up or down.

14. Disconnect the actuator from the power source.

15. Move the V-belt to the top of the idler pulley.

16. Reconnect to the power source.

NOTE: Engage the brake before extending the actuator.

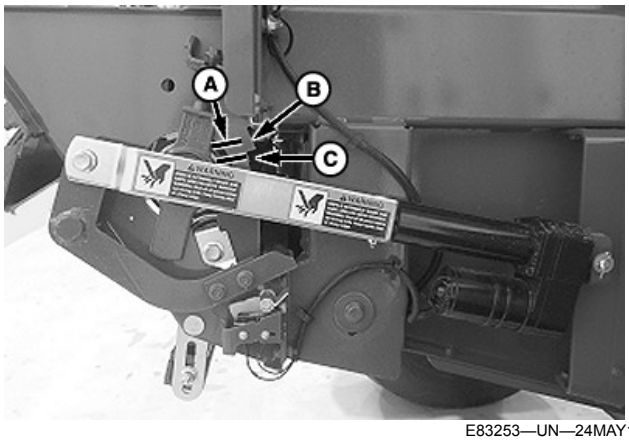

E83253—UN—24MAY17

Right-Hand Side

A—Clearance
B—Tab
C—Angle

17. Extend the actuator. Check that the clearance (A) from angle (C) to tab (B) on the right-hand side sheet is within specifications.

Specification	
Angle-to-Tab On Side sheet—Clearance	5—13 mm (0.197—1.512 in)

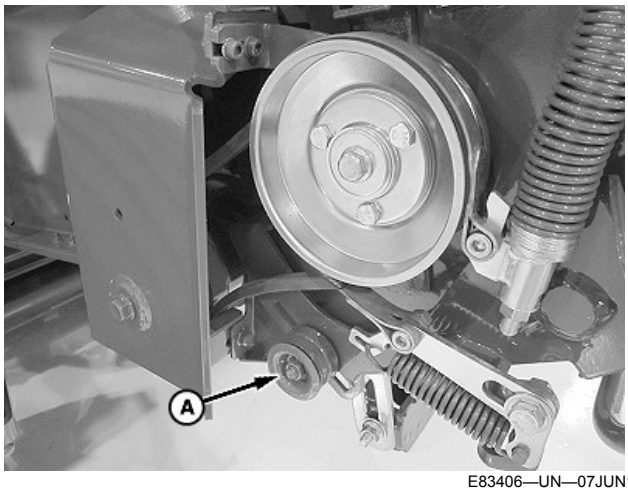

E83406—UN—07JUN17

Left-Hand Side Shown

A—Idler Pulley

18. If the clearance is not within specifications, adjust the idler pulley (A) in the idler arm slot until clearance is within the specified range.

19. Retract the actuator and re-extend it to check for correct clearance. If the clearance is still not correct, readjust the idler pulley (A) and recheck.

20. Close the net cover and shut the actuator door.

IMPORTANT: After adjustment, turn the monitor-controller ON. To return the cut-off arm to the home position, press the WRAP key. Turn the monitor-controller off to cancel the STOP alarm. If this procedure is not followed, net will be fed continuously during the next bale.

21. Connect the monitor-controller power plug to the power source. Turn the tractor ignition key to the ON position. Do not start the tractor engine. Turn the monitor-controller ON.

NOTE: The STOP alarm sounds while cycling the actuator.

22. Cycle the actuator several times using the WRAP key.
23. Press the WRAP key and return the net knife to the home (downward) position.
24. Turn the monitor-controller OFF.

DP99999,0000E04-19-14SEP17

Adjust Net Wrap Feed Roll Pressure

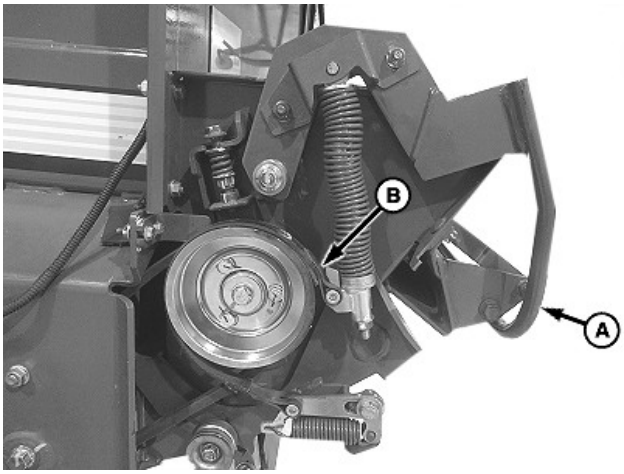

E83227—UN—23MAY17

A—Brake Lever
B—Brake Band

1. Open the net wrap cover.
2. Pull brake lever (A) out and up to rest on the latch tab and disengage the feed roll brake band (B).
3. Remove any foreign material or net wrap material from between the rolls.

NOTE: Too much pressure can cause the net wrap material to wrap on the rubber roll. Too little pressure prevents the net wrap material from being fed to the bale or can cause poor placement of net wrap material on the bale.

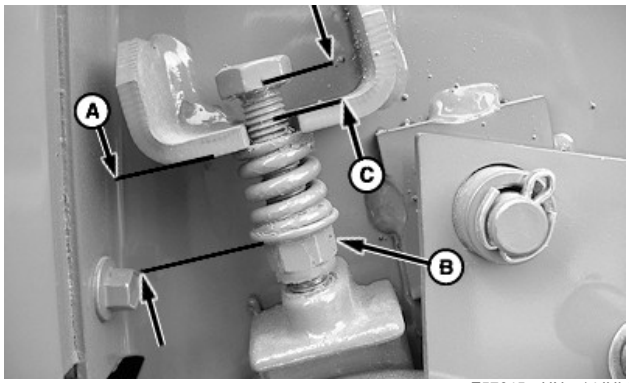

E57645—UN—14JUL09

Left-hand Side Shown

A—Spring Length
B—Adjusting Nut
C—Distance, Bolt Head to Bracket

4. Adjust the spring length (A) by loosening or tightening the spring adjusting nut (B) until the spring length and the bolt head to bracket distance (C) are within specifications.

Specification

Feed Roll Spring—Distance
Over Coils. . . . . 20.5 mm (0.807 in)

Specification

Bolt Head to Bracket—Distance. . . . . 1—12 mm (0.039—0.197 in)

5. Engage the brake by pulling the lever out and down to rest under the latch tab.
6. Repeat on the opposite side.

DP99999,0000E05-19-24AUG17

Test Net Wrap Switch—Monitor-Controller Assisted Test (Channel 012)

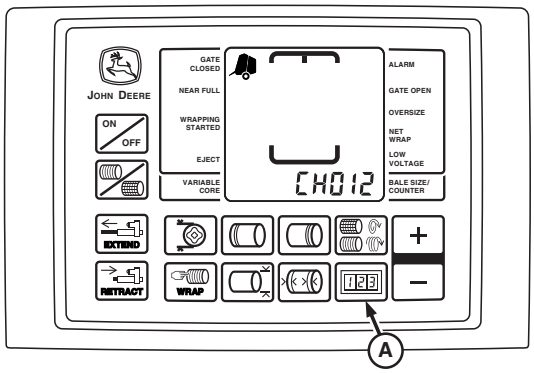

E52494—UN—24JUN03

BaleTrak™ Pro Monitor

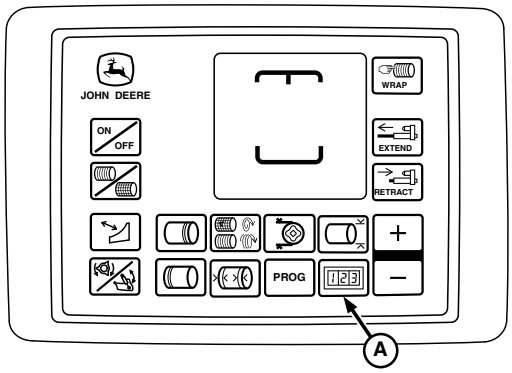

E84252—UN—28AUG17

BaleTrak™ Plus Monitor

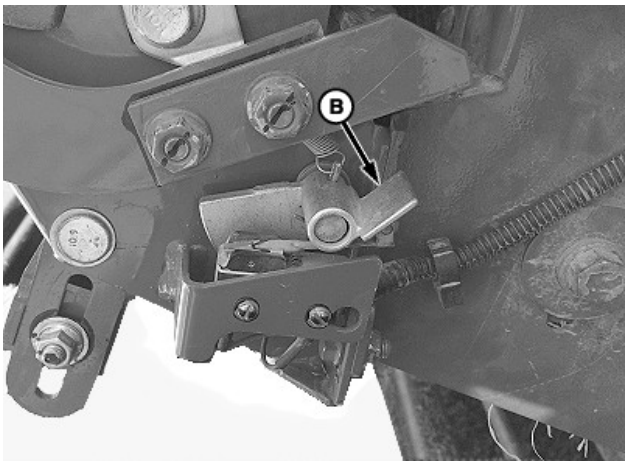

E85223—UN—24OCT17

A—COUNTER Key
B—Lever

1. Turn the tractor key to ON position. Do not start engine.
2. Press and hold the COUNTER key (A) while turning the monitor-controller ON. Continue to hold the COUNTER key and press the PLUS key until **CH012** appears on the display.
3. Release the COUNTER key. Verify the reading on the display and confirm that the tone is on.

Diagnostic Channel	Function	Switch Released Reading	Switch Depressed Reading
012	Net Wrap Switch	12—Net Normal (Tone)	00—Cutting (No Tone)

4. Depress lever (B) to open the switch internally. Verify the second reading and confirm that the tone goes off.
5. If the display readings and tone do not occur as described, check switch operation and adjustment. (See CHECK AND ADJUST NET WRAP SWITCH in this section.)

DP99999,0000D40-19-24OCT17

Check and Adjust Net Wrap Switch

TS268—UN—23AUG88

CAUTION: Knife is sharp and net wrap knife arm can move without warning. Keep hands clear of the knife arm.

1. Turn the tractor ignition key to the ON position. Do not start tractor engine.
2. Turn the monitor-controller ON. Ensure that the monitor-controller is in the NET mode.
3. Open the net wrap cover.
4. Clean the area around the net wrap switch.

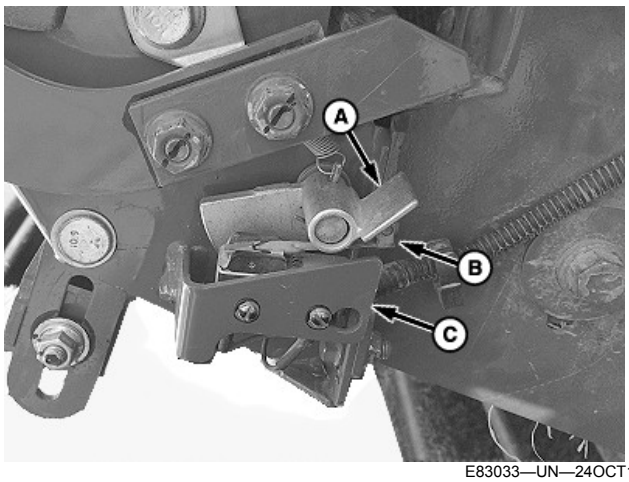

E83033—UN—24OCT17

Net Wrap Switch

A—Lever
B—Switch Actuator
C—Bracket

5. Verify that the switch actuator (B) and lever (A) do not contact bracket (C). Bend the bracket as necessary.
6. Verify that the knife arm is down.
7. Verify switch operation using the monitor display as follows:
   a. Go to channel 012 on the monitor. Tone must come on.

b. Rotate lever (A) down against the switch actuator (B). Tone must go off.

c. Release the lever. Tone must come on.

8. Turn the tractor ignition key OFF and remove key.

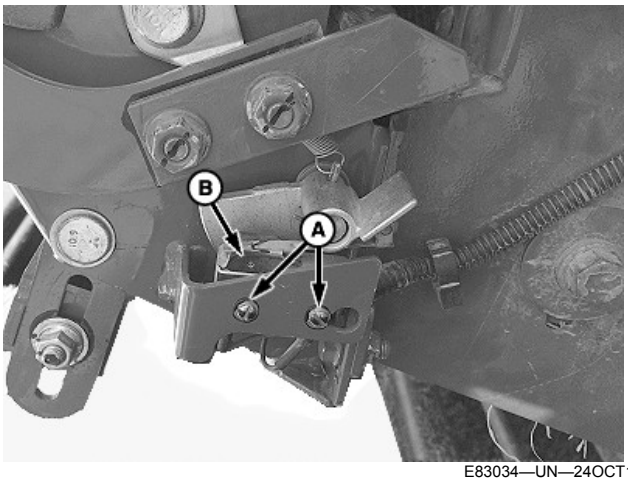

E83034—UN—24OCT17

A—Screw (2 used)
B—Switch

9. If the switch operation checkout does not provide the results described, adjust switch position as follows:

   a. Loosen screws (A) and reposition the switch (B) as necessary.

   b. Tighten screws finger tight, then tighten an additional 1/4—1/2 turn.

   c. Recheck switch operation using the monitor.

10. If switch adjustment does not produce the desired results:

   a. Check wire harness for cuts and breaks.

   b. Check wire connections on the switch.

   c. Disconnect one wire from the switch. Test switch operation using a multimeter. There must be continuity between the switch terminals when the switch actuator is in the up position. When the actuator is depressed, continuity must be broken. Replace switch as necessary.

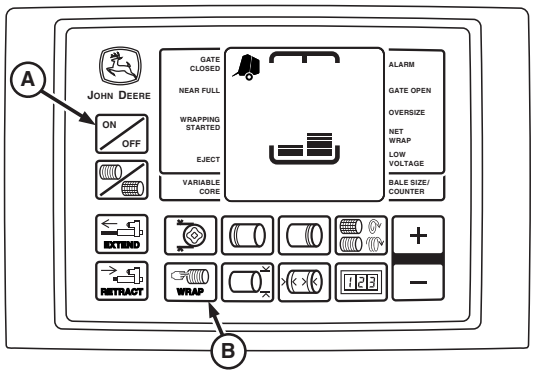

E52493—UN—24JUN03

BaleTrak™ Pro Monitor

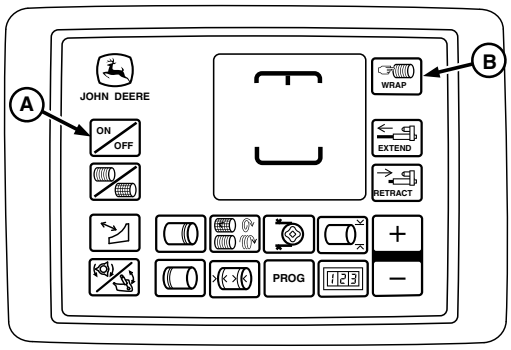

E84426—UN—06SEP17

BaleTrak™ Plus Monitor

A—ON- OFF Key
B—WRAP Key

11. Recheck switch operation using the monitor display.

12. Close the net wrap cover.

IMPORTANT: If this procedure is not followed, net feeds continuously during the next bale. The letter n appears in the monitor-controller display.

13. Press the WRAP key (B) to cycle the net wrap actuator. The net wrap knife arm must be at the home (downward) position.

14. Press the ON-OFF key (A) to turn the monitor-controller OFF. Turn the tractor ignition key to the OFF position and remove the key.

DP99999,0000D41-19-06SEP17

Test Net Wrap Actuator Current (Channel 018)

NOTE: Channel 018 allows operator to use the EXTEND and RETRACT keys to position the net actuator for service.

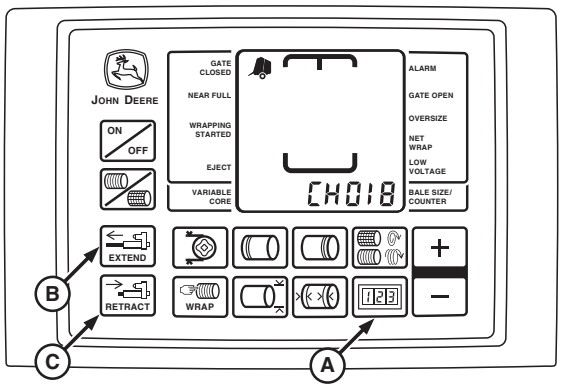

E52520—UN—26JUN03

BaleTrak™ Pro Monitor

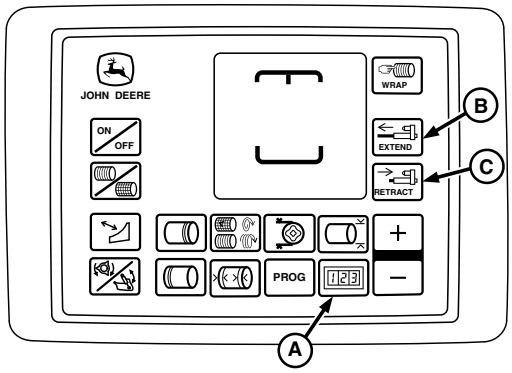

E84427—UN—06SEP17

BaleTrak™ Plus Monitor

A—COUNTER Key
B—EXTEND Key
C—RETRACT Key

This test is used to determine the working condition of the actuator through its entire range of operation.

1. Turn the tractor ignition key to the ON position. Do not start the tractor engine.

IMPORTANT: Remove net wrap material from the baler while performing this test. Otherwise, if the PTO is engaged with the net actuator extended, net feeds into the empty baler and can cause damage to the pickup or rotary feed system.

2. Remove the roll of net wrap material from the baler.
3. With the monitor-controller in the NET mode, press and hold the COUNTER key (A) while turning the monitor-controller ON.
4. Continue to hold the COUNTER key and press the PLUS key until **CH 018** appears in the digital display.
5. Release COUNTER key; the digital display changes to show the actuator static current flow reading of 0—1.
6. Use the EXTEND key (B) and the RETRACT key (C) to operate the actuator in both directions. The display must show a current flow reading between 1—8 while the actuator motor is operating during mid stroke (no load).
   - Below normal readings indicate low tractor voltage, or poor or corroded harness connections.
   - Above normal readings indicate binding linkage or partially shorted motor windings.
   - A spike in the current reading indicates a mechanical obstruction to the linkage.

NOTE: Net wrap actuator is at full stroke position when actuator is fully extended.

7. Continue to operate actuator to full stroke position. Display must show a stall (*load*) current reading between 22—30.
   - Below normal reading indicates bad or corroded harness connections
   - Above normal reading indicates partially shorted motor windings or actuator binding
8. Press the RETRACT key to move the actuator to the home position.
9. Turn the monitor-controller OFF. Turn the tractor ignition key to the OFF position and remove the key.

DP99999,0000E15-19-06SEP17

Remove Net Wrap Actuator

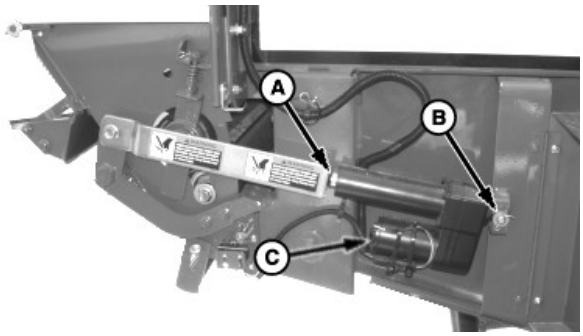

E54540—UN—01MAY06

A—Pin
B—Pin
C—Actuator

NOTE: Use monitor-controller channel 019 when removing net wrap actuator. This allows EXTEND and RETRACT keys to control actuator position and remove load from actuator mounting pins.

1. Open net wrap cover.
2. Unlatch and fully open actuator door.
3. Turn tractor key to ON position. Do not start tractor engine.

4. With monitor-controller in NET mode, press and hold COUNTER key. Turn monitor-controller ON. **CH 001** will appear in the digital display.
5. Continue to hold COUNTER key and press PLUS key to advance to **CH 019**. Release COUNTER key.

NOTE: Retracting the actuator will cause the mounting pins to bind.

6. Press and briefly hold EXTEND key to move actuator (C) to release load from mounting pins (A and B).

CAUTION: To avoid personal injury from unexpected knife movement, disconnect net wrap actuator wire connector or monitor-controller power plug from power source when performing adjustment or working in area.

7. Turn monitor-controller OFF. Turn tractor key to OFF position. Remove key. Disconnect monitor-controller power plug from power source.
8. Remove tie strap from around actuator motor and disconnect actuator wire connector.

NOTE: Record location of washers on mounting pins used to aid in installation of actuator.

9. Remove mounting pins (A and B), washers, and actuator (C).

PP98408,0001108-19-11FEB13

Install Net Wrap Actuator

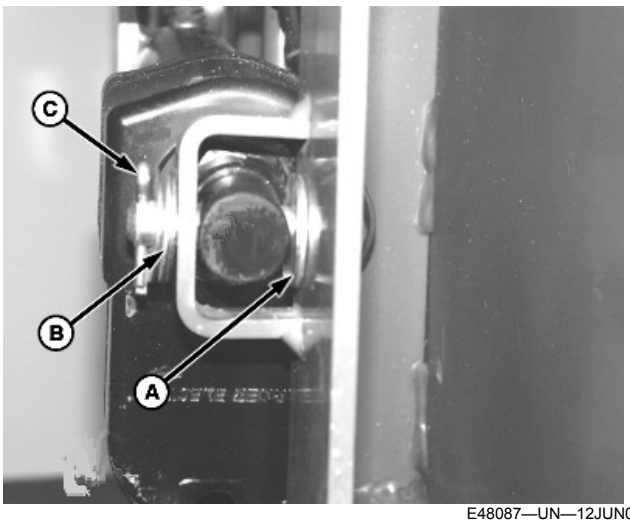

E48087—UN—12JUN00

A—Washer, 13 x 25 x 3 mm
B—Washer, 13 x 25 x 3 mm (2 used)
C—Cotter Pin, 4 x 25 mm (2 used)

1. Install base end of actuator (motor down) on the right-hand side of the gate with a crowned pin (previously removed). Insert the pin through the inside hole in the actuator support, through washer (A), actuator, and second hole in the support.
2. Install two washers (B) and cotter pin (C).

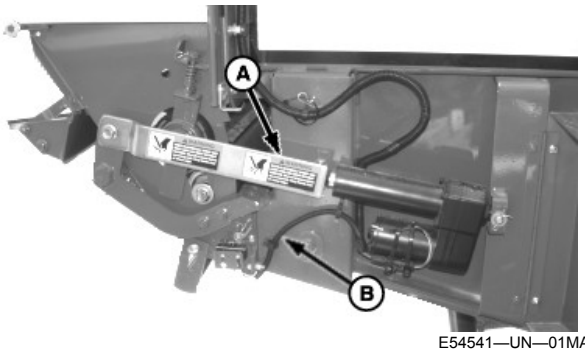

E54541—UN—01MAY06

A—Link
B—Washer and Cotter Pin

3. Install link (A) over the rod end of the actuator as shown. Insert a crowned pin (previously removed) from the top through the link and the actuator rod.
4. Install washer and cotter pin (B).
5. Connect the wire harness to the actuator. Fasten connector and harness to actuator motor with a tie strap.
6. Shut the actuator door.

IMPORTANT: After installing actuator, turn the monitor-controller ON. To return the counterknife arms to the home position, press the WRAP key. Turn the monitor-controller off to cancel the STOP alarm. If this procedure is not followed, net will be fed continuously during the next bale.

7. Connect the monitor-controller power plug to the power source. Turn the tractor ignition key to the ON position. Do not start the tractor engine. Turn the monitor-controller ON.

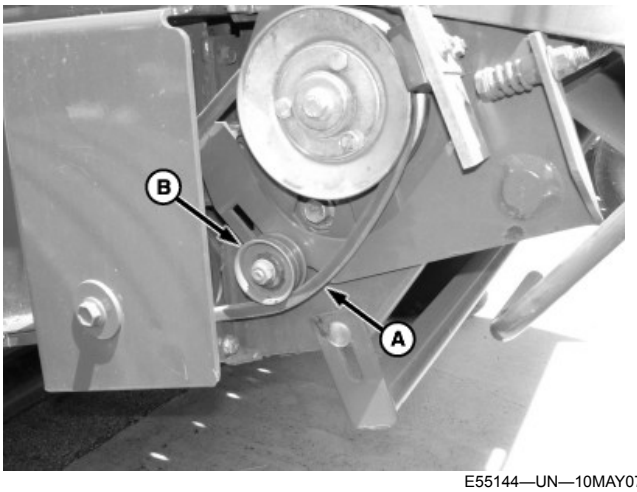

E55144—UN—10MAY07

A—Belt
B—Idler Pulley

8. With channel 018 on monitor, cycle the actuator using the extend or retract key so the actuator moves just half way up or down, so belt (A) is loose.
9. Temporarily move the V-belt from the top of the idler pulley (B) to the underside of the idler pulley.
10. Cycle the actuator several times using the WRAP key. Make sure that the actuator fully extends and fully retracts. If not, check for any binding at the mounting pins and washers. Clean electrical connections and check for low tractor voltage. There must be a minimum of 9.7 V with the tractor engine running and the net actuator installed.
11. Place the monitor on channel 018. Use the extend or retract key and return the actuator to approximately half way up or down.
12. Move the V-belt to top of idler pulley.
13. Using the extend or retract key, retract the actuator so the idler pulley does not have pressure on the belt.
14. Turn the monitor-controller OFF. Turn the tractor key to the OFF position and remove the key.
15. Check and adjust the net wrap V-belt idler tension. (See Check And Adjust Net Wrap V-Belt Idler Tension in this section.)
16. Check and adjust feed roll brake (See Check And Adjust Net Wrap Feed Roll Brake in this section.)

DP99999,0000E8C-19-27NOV17

Check and Adjust Lower Belt Guides (MegaWide™ Plus Pickup)

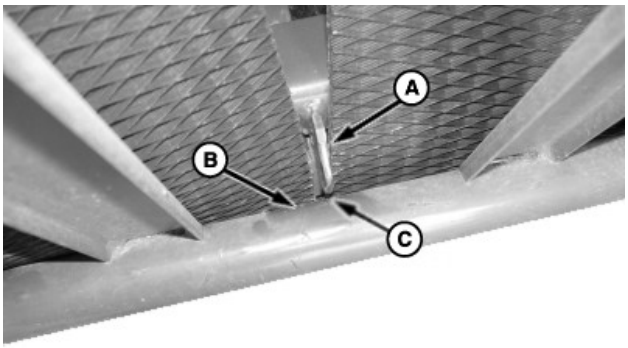

E55312—UN—28JUN07

A—Strap
B—Crossbar
C—Clearance

1. Check that belts are not pinched between the lower belt guide straps (A) and crossbar (B). Tighten nuts on both sides of crossbar.

IMPORTANT: If clearance (C) is too close, slitting of net material can occur.

NOTE: To reduce net material slits while baling milo, sorghum, or cornstalks, adjust the clearance to 4—5 mm (0.16—0.20 in).

NOTE: To check the clearance between the straps and the crossbar, use a 3 mm (0.12 in) and a 5 mm (0.20 in) drill bit as gauges.

2. Check the clearance (C) between the end of all belt guide straps and the bottom crossbar. Clearance must be within specifications.

	Specification
Belt Guide to Bottom Crossbar—Clearance	3—5 mm (0.12—0.20 in)

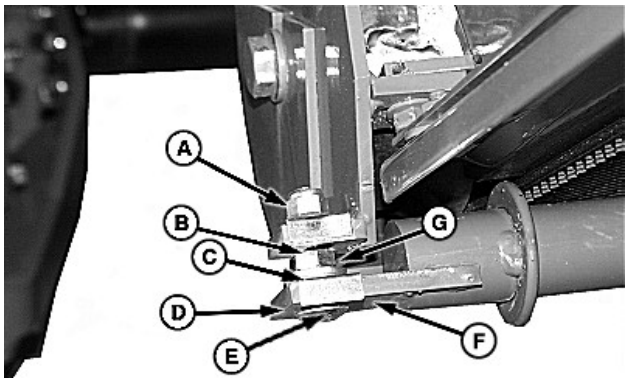

E49028—UN—18OCT00

A—Lock Nut, M10
B—Nut, M10
C—Shims
D—Shims—Storage Position
E—Carriage Bolt, M10 x 50
F—Crossbar Mounting Bracket
G—Washer, 10.50 x 18 x 1.60 mm

3. If clearance is not within specification, adjust as follows:

CAUTION: Prevent damage to the baler. If not supported, the net wrap guide swings back when the lock nuts are removed. DO NOT let the guide swing back freely.

a. Remove lock nuts (A).
b. Swing the net wrap guide away from the gate roll.
c. Remove nuts (B) while keeping carriage bolts (E) in place.
d. Add or remove washer (G) and shims (C) on each side as needed.
e. Install nuts (B) on carriage bolts (E) and tighten.
f. Swing the guide assembly forward and align the bolts with the holes in the frame. Install lock nuts and tighten.
g. Recheck clearance on both sides and repeat adjustment as necessary.

NOTE: Always check clearance between all belt guide straps and bottom crossbar before checking clearance between guide washer and lower net wrap guide.

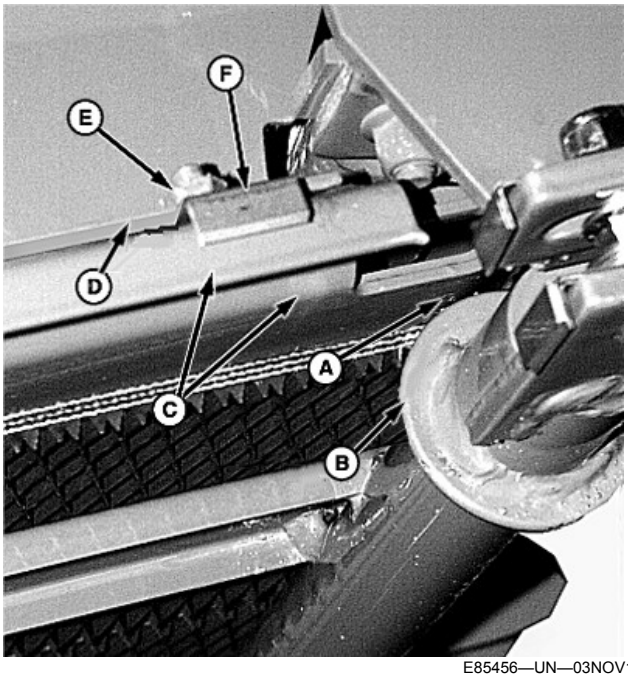

E85456—UN—03NOV17

A—Clearance
B—Belt Guide Washer
C—Lower Net Wrap Guide
D—Deflector
E—Nut
F—Shims

IMPORTANT: If 0.5—2.5 mm (0.020—0.100 in) clearance (A) is exceeded, the outside belts can pass between the belt guide washer (B) and the guide (C) and damage belts.

4. Check clearance (A) between guide washer (B) and lower net wrap guide (C). Clearance must be within specifications.

Specification

Belt Guide Washer to Lower Net Wrap Guide—Clearance. . . . . 0.5—2.5 mm (0.020—0.100 in)

5. If clearance is not within specifications, loosen nut (E) and add or remove shims (F) between the net wrap guide (C) and deflector (D), as necessary. Tighten nut (E).
6. Recheck the clearance (A) between the belt guide washer and the lower net wrap guide on both sides and adjust if necessary.
7. Adjust belt tracking. (See Adjust Belt Tracking in Service-Baler section.)

DP99999,0000D87-19-03NOV17

Check and Adjust Lower Belt Guides (MegaWide™ HC2 Feed System)

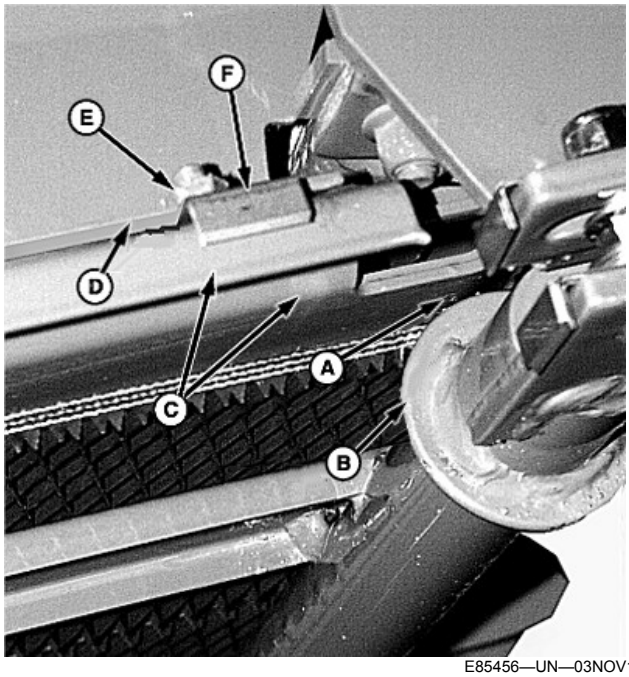

E85456—UN—03NOV17

A—Clearance
B—Belt Guide Washer
C—Lower Net Wrap Guide
D—Deflector
E—Nut
F—Shims

1. Check clearance (A) between guide washer (B) and lower the net wrap guide (C). Clearance must be within specifications.

Specification

Belt Guide Washer to Lower Net Wrap Guide—Clearance. . . . . 0.5—2.5 mm (0.020—0.100 in)

IMPORTANT: If 0.5—2.5 mm (0.020—0.100 in) clearance (A) is exceeded, the outside belts can pass between the belt guide washer (B) and guide (C) and damage belts.

2. If clearance is not within specifications, loosen nut (E) and add or remove shims (F) between the net wrap guide (C) and deflector (D), as necessary. Tighten nut (E).

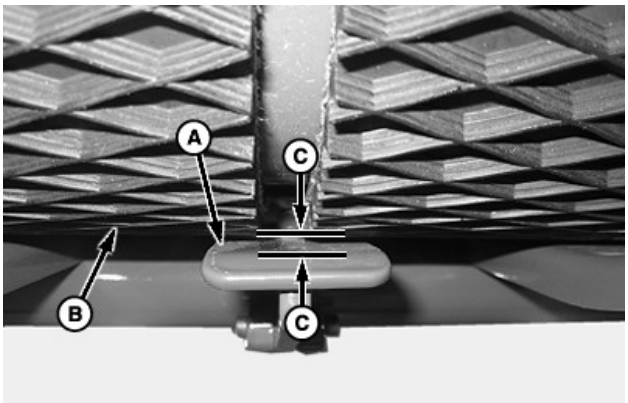

E83603—UN—19JUN17

A—Strap
B—Belt
C—Clearance

3. Check that belts (B) are not pinched between the lower belt guide straps (A) and roll or spirals on the roll. Belt guides must be spaced evenly across the net pan crossbar.
4. Check the clearance (C) between the flat part of the belt guide strap and the belt. Measure from the outer surface of the belt to the flat surface of the belt guide. Measurement must be taken when the spiral on the gate roll is aligned to the belt guide flat. Clearance must be within specifications.

Specification	
Belt Surface to Belt Guide Flat—Clearance	1—2 mm (0.039—0.078 in)

5. If the clearance is not within specifications, adjust as follows:
   a. Loosen the lock nut.
   b. Rotate the belt guide to obtain the required clearance.
   c. Tighten the nut.
   d. Recheck the clearance with the spiral aligned with the flat of the belt guide.

DP99999,0000D88-19-03NOV17

Adjust Net Wrap Stretch

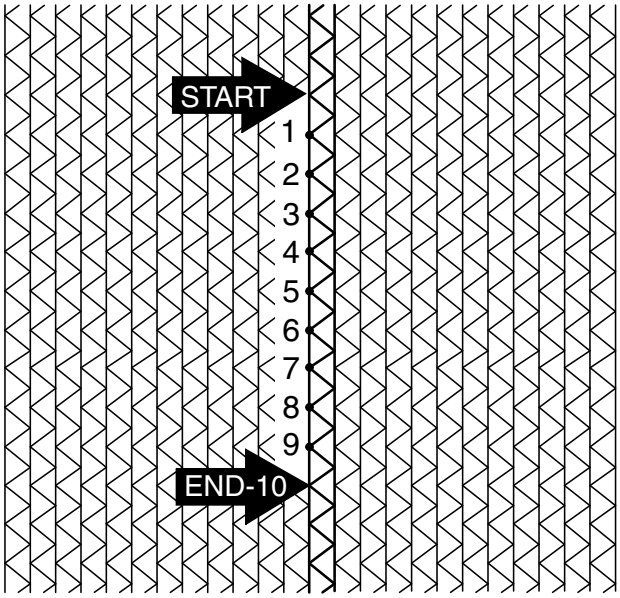

E51238—19—20FEB02

1. Unroll 1 m (3 ft) of material from the roll of net being used. Locate a starting point in the net and, with net wrap pulled snug, measure between 10 weaves as shown in the illustration. Divide the measurement by 10 to obtain the initial net measurement.
2. Thread net properly and make, wrap, and unload a bale

NOTE: Examine the bale for inconsistencies in diameter and take the stretch measurement at an average diameter. Do not use areas where there are excessive bunches of crop or voids in the bale as measuring points.

3. Locate the end cut-off on the bale. Use the net directly under the cut-off as a starting point for measurement.
4. Take the measurement between 10 weaves as shown in illustration. Divide the measurement by 10 to obtain the net stretch value.
5. The net stretch value must be 3—4 mm (0.118—0.157 in) greater than the value measured in Step 1. If measurement is not within this range, proceed to Step 6.

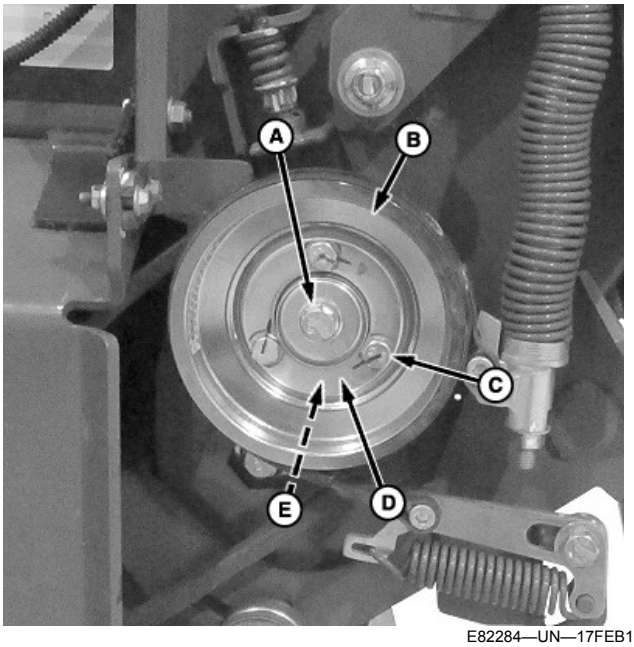

E82284—UN—17FEB17

A—Cap Screw
B—Sheave
C—Cap Screw (3 used)
D—Shims (stored)
E—Shims (in use)

6. Put pressure on sheave (B) using the brake lever while loosening the three cap screws (C), shims (D) and cap screw (A).
7. Release the brake lever.
8. Remove the cap screw (A) and washer.
9. Remove the three cap screws (C), shims (D), and outer sheave (B).
10. Transfer shims (E) to and from stored location (D) to meet the net stretch value of 3—4 mm (0.118—0.157 in) more than the value measured in Step 1.
    - Decreasing the number of shims (E) between sheave halves increases the distance.
    - Increasing the number of shims (E) decreases the distance.
11. Install the belt and assemble sheave (B) in reverse order using the following special instructions:
    - Install cap screw (A) and tighten to specification.

Specification

Cap Screw (A)—Torque. . . . . 40 N·m (30 lb·ft)

DP99999,0000DA3-19-05JUL17

Adjust B-Wrap Sensor

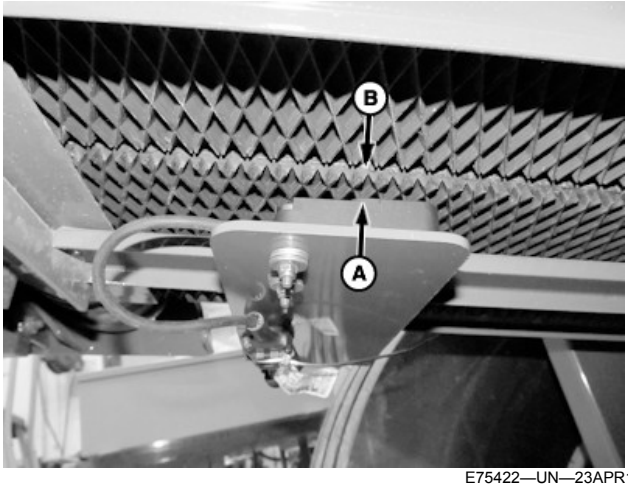

E75422—UN—23APR14

A—Sensor
B—Belt

1. Check the distance between the top of sensor (A) and belt (B). Distance **must be** within specification.

Specification

Sensor-to-Belt—Distance. . . . . 4—8 mm (0.16—0.31 in)

NOTE: Be sure that sensor (A) is straight on the bracket as screws are tightened.

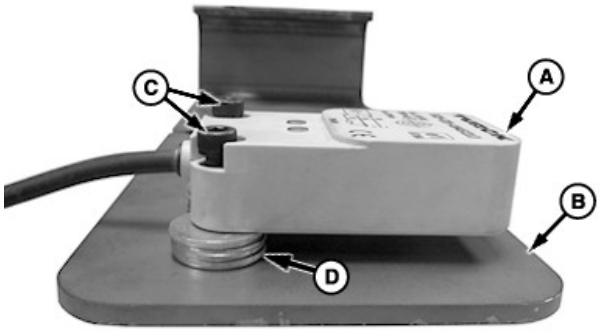

E69287—UN—08JAN13

A—Sensor
B—Bracket
C—Screw and Lock Nut, M4 x 30 mm (2 used)
D—Washer, 5.3 x 15 x 1.2 mm (4 used per screw)

2. Sensor (A) is mounted to bracket (B) with screws and lock nuts (C), and washers (D).

   To adjust sensor clearance, remove the screws and lock nuts. Add or remove washers under the sensor as needed to obtain the proper clearance.

DP99999,0000DB8-19-29SEP17

BaleTrak™ Pro System Component Locations (MegaWide™ Plus Pickup)

NOTE: The BaleTrak™ system is not used on a 460M or 560M Baler with a regular pickup.

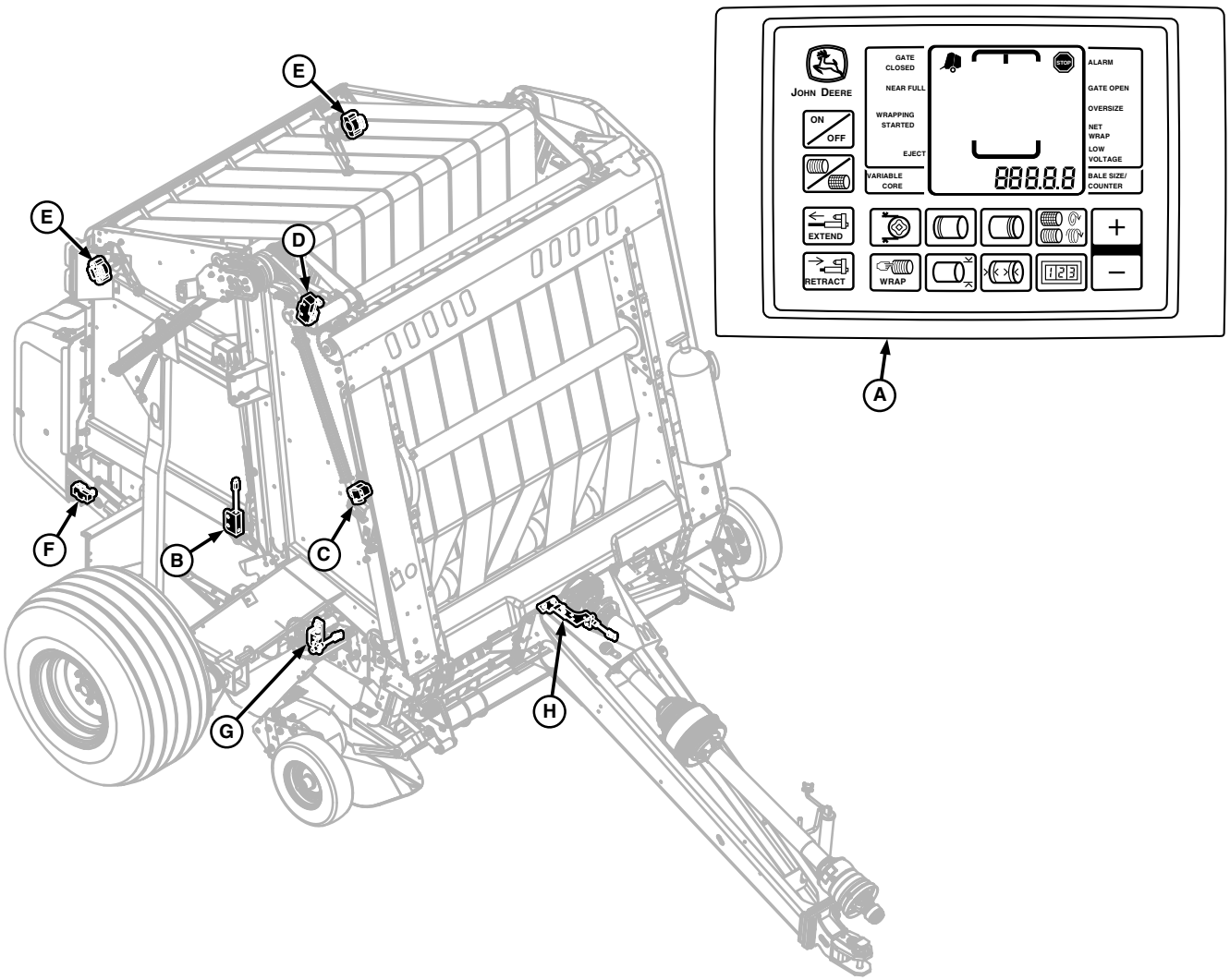

E84090—UN—15AUG17

A—Monitor-Controller (on tractor)
B—Gate Latch Switch (left-hand switch not used)
C—Bale Diameter Sensor
D—Oversize Bale Switch
E—Bale Shape Sensors
F—Net Wrap Switch (if equipped)
G—Pickup Slip Clutch Alert Sensor
H—PTO Slip Clutch Alert Sensor

DP99999,0000DF8-19-25AUG17

BaleTrak is a trademark of Deere & Company

BaleTrak™ Plus System Component Locations (HC2 Feed System)

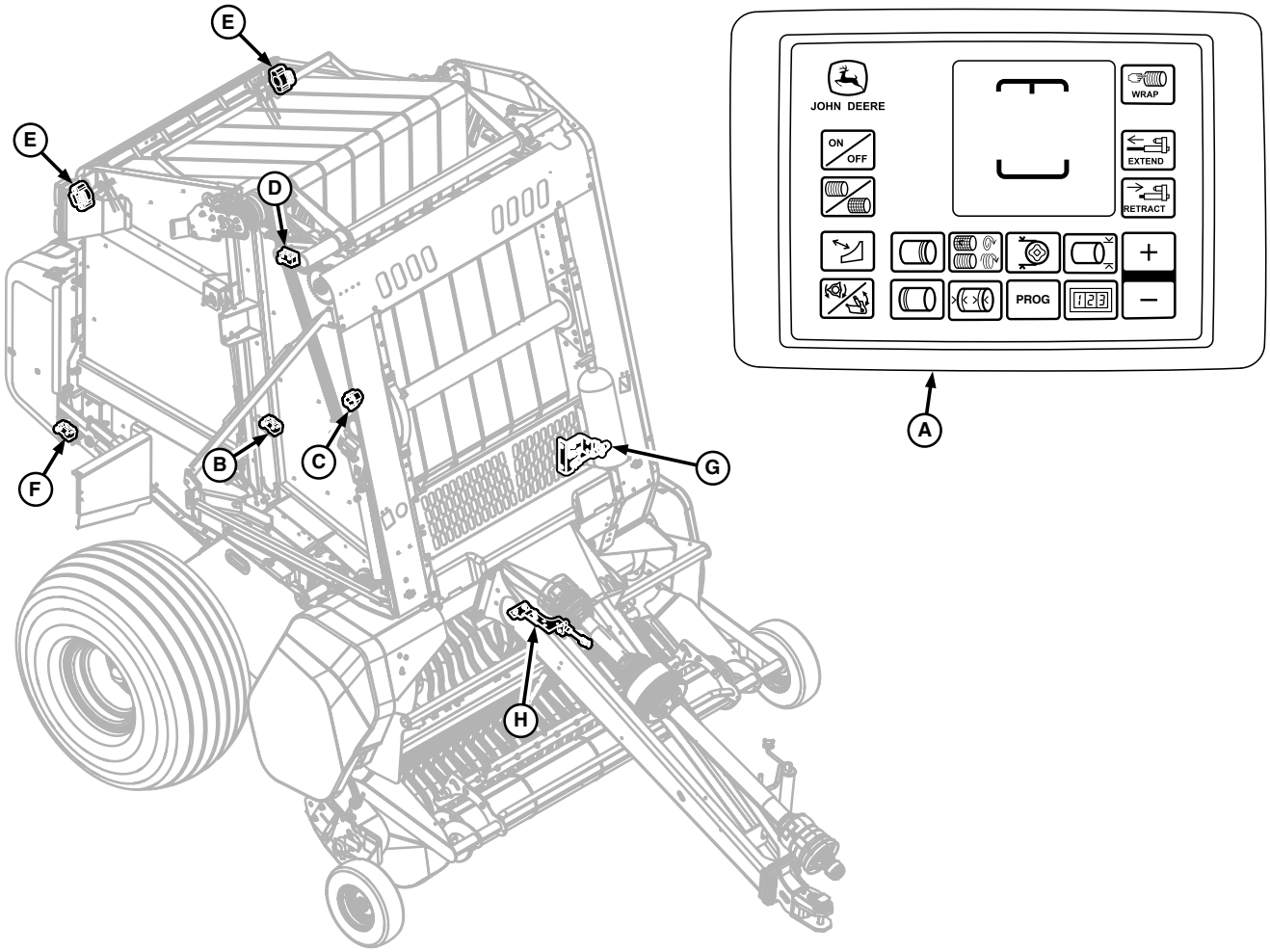

E84091—UN—15AUG17

A—Monitor-Controller (on tractor)
B—Gate Latch Switch (left-hand switch not used)
C—Bale Diameter Sensor
D—Oversize Bale Switch
E—Bale Shape Sensors
F—Net Wrap Switch (if equipped)
G—Pickup Slip Clutch Alert Sensor
H—PTO Slip Clutch Alert Sensor

DP99999,0000DF9-19-25AUG17

Wire Diagram—BaleTrak™ Pro and Plus Monitor-Controller Control System

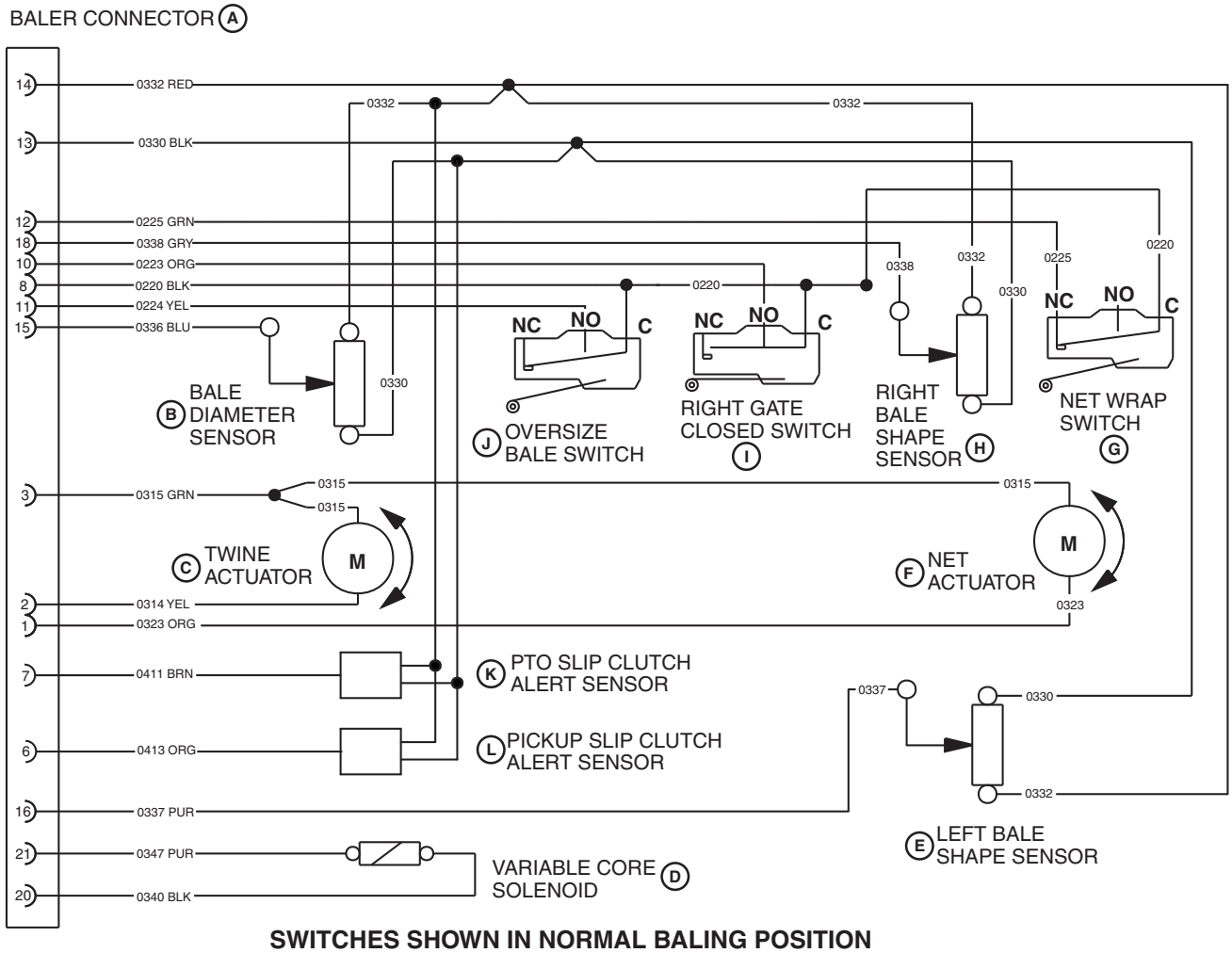

SWITCHES SHOWN IN NORMAL BALING POSITION

E84496—UN—15SEP17

A—Baler Connector
B—Bale Diameter Sensor
C—Twine Actuator
D—Variable Core Solenoid
E—Left Bale Shape Sensor
F—Net Actuator
G—Net Wrap Switch
H—Right Bale Shape Sensor
I—Right Gate Closed Switch
J—Oversize Bale Switch
K—PTO Slip Clutch Alert Sensor (Not Used on 450M and 550M with Regular Pickup)
L—Pickup Slip Clutch Alert Sensor (Not Used on 450M and 550M with Regular Pickup)

SF04007,0000E74-19-15SEP17

Wire Harness Diagram—BaleTrak™ Pro and Plus Monitor-Controller

E83612—UN—18JUL17

A—Monitor-Controller Connector (X1)
B—Tractor Convenience Outlet Connector (X2)

X1 BaleTrak™ Monitor-Controller Connector			
Terminal	**Circuit**	**Function**	**Wire Color**
1			
2	0513	Pickup Valve Supply	Orange
3	0514	Knives Valve Supply	Yellow
4	0515	Drop Floor Valve Supply	Green
5	0510	Valve Ground	Black
6	0338	Right Bale Shape Sensor	Gray
7			
8	0337	Left Bale Shape Sensor	Violet
9	0332	5 V Sensor Power	Red
10	0516	Knife Switch Signal	Blue
11			
12			
13	0517	Drop Floor Switch Signal	Violet
14	0411	PTO Speed Sensor Signal	Brown
15	0223	Right Gate Switch Signal	Orange
16	0224	Oversize Switch Signal	Yellow
17	0221	Left Gate Switch Signal	Brown
18	0225	Net Switch Signal	Green
19	0336	Bale Size Sensor Signal	Blue
20	0050X	Switch Ground	Black
21	0330	5 V Sensor Ground	Black

C—To Baler Wire Harness Connector (X6)

X1 BaleTrak™ Monitor-Controller Connector			
Terminal	**Circuit**	**Function**	**Wire Color**
22	0413	Pickup Speed Sensor Signal	Orange
23	0323	Net Actuator Power	Orange
24			
25	0347	Soft Core Valve Supply	Violet
26	0315	Net/Twine Common	Green
27	0220	Switch Ground	Black
28	0002X	12 V System Power	Red
29	0410	Sensor Ground	Black
30	0314	Twine Actuator Power	Yellow
31	0340	Soft Core Valve Return	Black

BaleTrak is a trademark of Deere & Company

X2 Tractor Convenience Outlet Connector			
Terminal	**Circuit**	**Function**	**Wire Color**
1	002	Power	Red
2			
3	050	Ground	Black

X6 Monitor Harness-to-Baler Harness Connector			
Terminal	**Circuit**	**Function**	**Wire Color**
1	0323	Net Actuator Power	Orange
2	0314	Twine Actuator Power	Yellow
3	0315	Net/Twine Common	Green

X6 Monitor Harness-to-Baler Harness Connector			
Terminal	Circuit	Function	Wire Color
4			
5	0410	Sensor Ground	Black
6	0413	Pickup Speed Sensor Signal	Orange
7	0411	PTO Speed Sensor Signal	Brown
8	0220	Switch Ground	Black
9	0221	Left Gate Switch Signal	Brown
10	0223	Right Gate Switch Signal	Orange
11	0224	Oversize Switch Signal	Yellow
12	0225	Net Switch Signal	Green
13	0330	5 V Sensor Ground	Black
14	0332	5 V Sensor Supply	Red
15	0336	Bale Size Sensor Signal	Blue
16	0337	Left Bale Shape Sensor Signal	Violet
17	0002A	12 V System Power	Red

X6 Monitor Harness-to-Baler Harness Connector			
Terminal	Circuit	Function	Wire Color
18	0338	Right Bale Shape Sensor Signal	Gray
19	0050A	System Ground	Black
20	0340	Soft Core Valve Return	Black
21	0347	Soft Core Valve Supply	Violet
22	0513	Pickup Valve Supply	Orange
23	0516	Knife Switch Signal	Blue
24	0517	Drop Floor Switch Signal	Violet
25	0514	Knives Valve Supply	Yellow
26	0515	Drop Floor Valve Supply	Green
27			
28	0510	Valve Ground	Black
29			

SF04007,0000E7E-19-15SEP17

Wire Harness Diagram—HC2 Feed System

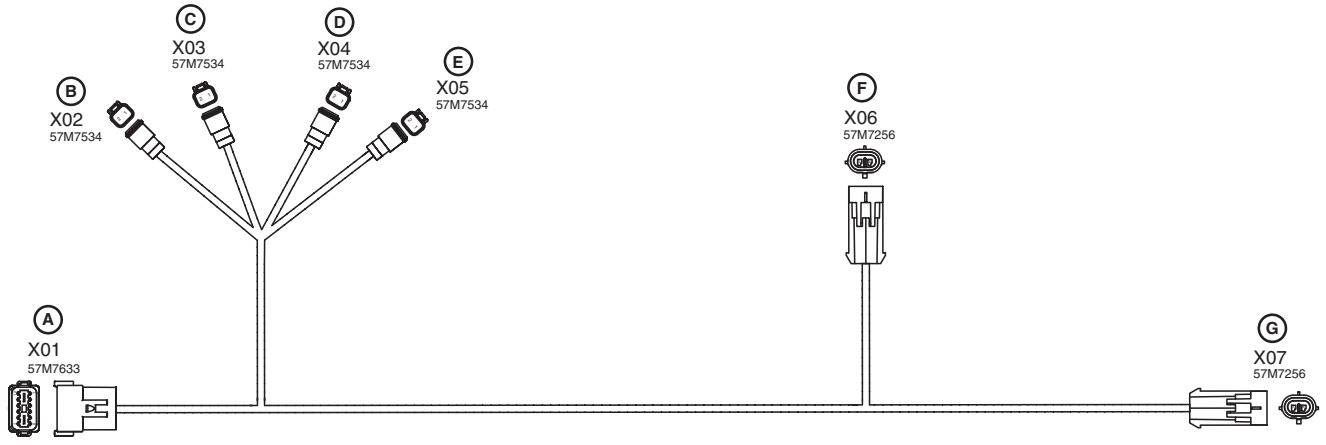

E83499—UN—14JUN17

A—Precutter Connector (X01)
B—Pickup Solenoid (X02)
C—Knives Engage Solenoid (X03)
D—Drop Floor Solenoid A (X04)

X01 Precutter Connector			
Terminal	**Circuit**	**Function**	**Wire Color**
1	0513	Pickup Valve Supply	Orange
2	0514	Knife Valve Supply	Yellow
3	0515	Drop Floor Valve Supply	Green
4	0510	Valve Ground	Black
5	0516	Knife Switch Signal	Blue
6	0517	Drop Floor Switch Signal	Violet
7	0220	Switch Ground	Black

X02 Pickup Solenoid			
Terminal	**Circuit**	**Function**	**Wire Color**
1	0513	Pickup Valve Supply	Orange
2	0510	Valve Ground	Black

X03 Knives Engage Solenoid			
Terminal	**Circuit**	**Function**	**Wire Color**
1	0514	Knife Valve Supply	Yellow
2	0510	Valve Ground	Black

E—Drop Floor Solenoid B (X05)
F—Knife Switch (X06)
G—Drop Floor Switch (X07)

X04 Drop Floor Solenoid A			
Terminal	**Circuit**	**Function**	**Wire Color**
1	0515	Drop Floor Valve Supply	Green
2	0510	Valve Ground	Black

X05 Drop Floor Solenoid B			
Terminal	**Circuit**	**Function**	**Wire Color**
1	0515	Drop Floor Valve Supply	Green
2	?0510	Valve Ground	Black

X06 Knife Switch			
Terminal	**Circuit**	**Function**	**Wire Color**
A	0516	Knife Switch Signal	Blue
B	?0220	Switch Ground	Black

X07 Drop Floor Switch			
Terminal	**Circuit**	**Function**	**Wire Color**
A	0517	Drop Floor Switch Signal	Violet
B	0220	Switch Ground	Black

SF04007,0000F6C-19-22SEP17

Wire Harness Diagram—Baler

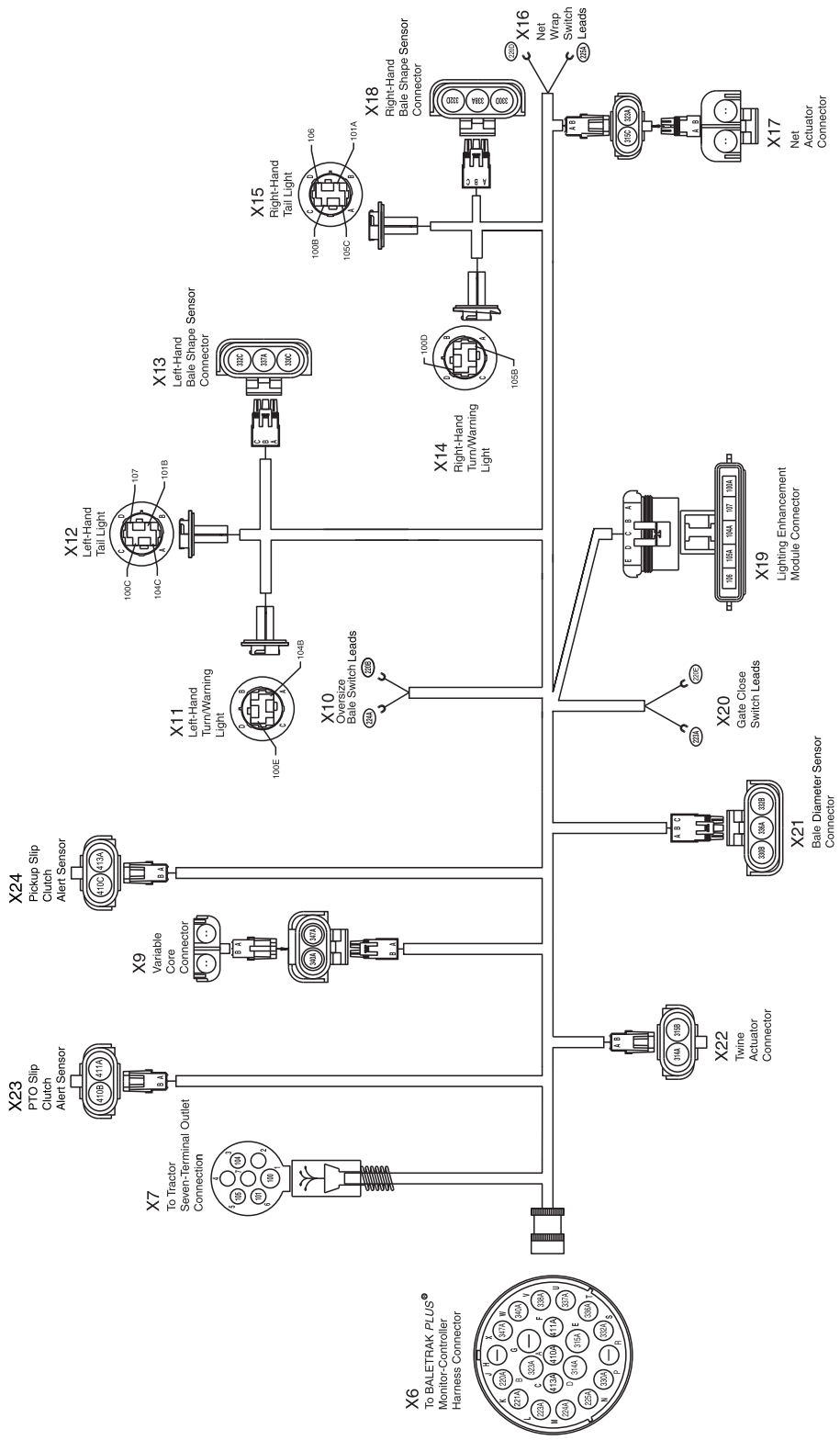

E84487—UN—12SEP17

X6 To BaleTrak™ Pro Monitor-Controller Harness Connector			
Terminal	**Circuit**	**Function**	**Wire Color**
A	410A	Ground	Black
B	323A	Net Actuator	Orange
C	413A	Pickup Slip Clutch Alert Sensor[a]	Orange
D	314A	Twine Actuator	Yellow
E	315A	Twine or Net Actuator	Green
F	411A	PTO Pickup Slip Clutch Alert Sensor[a]	Brown
G		Open	
H		Open	
J	220A	Ground	Black
K	221A	Left-hand Gate Closed Switch	Brown
L	223A	Right-hand Gate Closed Switch	Orange
M	224A	Oversize Bale Switch	Yellow
N	225A	Net Switch	Green
P	330A	Sensor Ground	Black
R		Open	
S	332A	Bale Diameter Sensor	Red
T	336A	Bale Diameter Sensor	Blue
U	337A	Left Bale Shape Sensor	Purple
V	338A	Right Bale Shape Sensor	Gray
W	340A	Ground	Black
X	347A	Power	Purple

[a]*Not used on 450M and 550M with a Regular pickup.*

X7 To Tractor Seven-Terminal Outlet Connector			
Terminal	**Circuit**	**Function**	**Wire Color**
1	100	Ground	Black
2		Open	
3	104	Left-hand Turn or Warning Light	Yellow
4		Open	
5	105	Right-hand Turn or Warning Light	Green
6	101	Tail Lights	Brown
7		Open	

X9 Variable Core Connector			
Terminal	**Circuit**	**Function**	**Wire Color**
A	347A	Power	Purple
B	340A	Ground	Black

X10 Oversize Bale Switch Leads			
Terminal	**Circuit**	**Function**	**Wire Color**
No Common	224A	Power	Yellow
No Common	220B	Ground	Black

X11 Left-Hand Turn or Warning Light Connector			
Terminal	**Circuit**	**Function**	**Wire Color**
A	104B	Power	Yellow
B		Open	
C		Open	
D	100E	Ground	Black

X12 Left-Hand Tail Light Connector			
Terminal	**Circuit**	**Function**	**Wire Color**
A	104C	Left-hand Turn or Warning Light	Yellow
B	101B	Left-hand Tail Lamp	Brown
C	100C	Ground	Black
D	107	Left-hand Flasher	Orange

X13 Left-Hand Bale Shape Sensor Connector			
Terminal	**Circuit**	**Function**	**Wire Color**
A	330C	Ground	Black
B	337A	Left Bale Shape	Purple
C	332C	Left Bale Shape	Red

X14 Right-Hand Turn or Warning Light Connector			
Terminal	**Circuit**	**Function**	**Wire Color**
A	105B	Power	Green
B		Open	
C		Open	
D	100D	Ground	Black

X15 Right-Hand Tail Light Connector			
Terminal	**Circuit**	**Function**	**Wire Color**
A	105C	Right-hand Turn or Warning Light	Green
B	101A	Right-hand Tail Lamp	Brown
C	100B	Ground	Black

X15 Right-Hand Tail Light Connector			
Terminal	**Circuit**	**Function**	**Wire Color**
D	106	Right-hand Flasher	Violet

X16 Net Wrap Switch Leads			
Terminal	**Circuit**	**Function**	**Wire Color**
No Common	220D	Ground	Black
No Common	225A	Power	Green

X17 Net Actuator Connector			
Terminal	**Circuit**	**Function**	**Wire Color**
A	315C	Net Actuator	Green
B	323A	Net Actuator	Orange

X18 Right-Hand Bale Shape Sensor Connector			
Terminal	**Circuit**	**Function**	**Wire Color**
A	330D	Ground	Black
B	338A	Right Bale Shape	Gray
C	332D	Right Bale Shape	Red

X19 Lighting Enhancement Module Connector			
Terminal	**Circuit**	**Function**	**Wire Color**
A	100A	Ground	Black
B	107	Left-hand Flasher	Orange
C	104A	Left-hand Turn or Warning Light	Yellow
D	105A	Right-hand Turn or Warning Light	Green
E	106	Right-hand Flasher	Violet

X20 Right-Hand Gate Closed Switch Leads			
Terminal	**Circuit**	**Function**	**Wire Color**
No Common	220E	Ground	Black
No Common	223A	Power	Orange

X21 Bale Diameter Sensor Connector			
Terminal	**Circuit**	**Function**	**Wire Color**
A	330B	Ground	Black
B	336A	Bale Diameter	Blue
C	332B	Bale Diameter	Red

X22 Twine Actuator Connector			
Terminal	**Circuit**	**Function**	**Wire Color**
A	314A	Twine Actuator	Yellow
B	315B	Twine Actuator	Green

X23 PTO Speed Sensor			
Terminal	**Circuit**	**Function**	**Wire Color**
A	411A	PTO Slip Clutch Alert[a]	Brown
B	410B	Ground	Black

[a]*Not used on 450M and 550M with a Regular pickup.*

X24 Pickup Speed Sensor			
Terminal	**Circuit**	**Function**	**Wire Color**
A	413A	Pickup Slip Clutch Alert[a]	Orange
B	410C	Ground	Black

[a]*Not used on 450M and 550M with a Regular pickup.*

SF04007,0000E7F-19-12SEP17

Calibrate Bale Diameter Display (Channel 005)

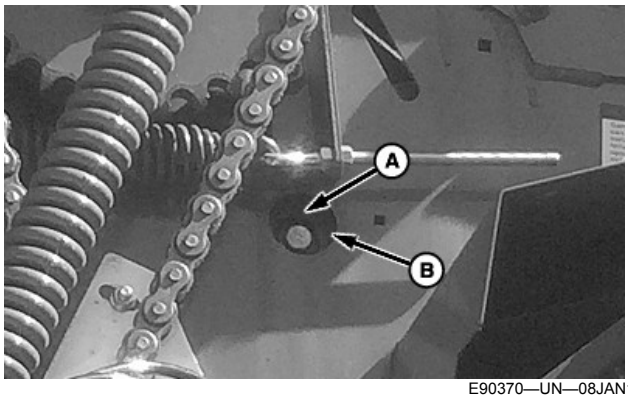

E90370—UN—08JAN19

A—Small Hole
B—Side Sheet Hole

1. Slowly raise the tension arm using the tractor SCV until the small hole (A) in the tension arm aligns with the side sheet hole (B).

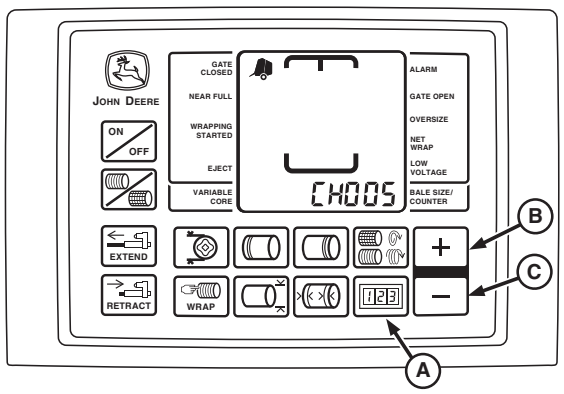

E84413—UN—01SEP17

BaleTrak™ Pro Monitor

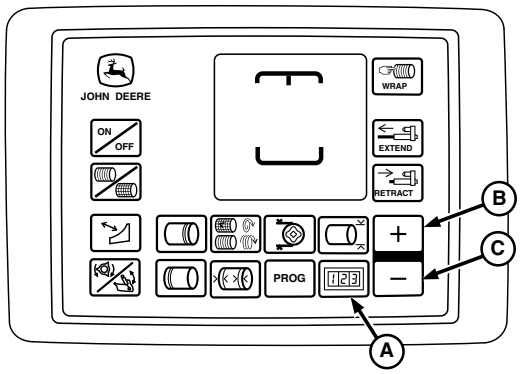

E84047—UN—10AUG17

BaleTrak™ Plus Monitor

A—COUNTER Key
B—PLUS Key
C—MINUS Key

2. Press and hold COUNTER key (A) and turn the monitor-controller ON.
3. Continue to hold the COUNTER key and press the PLUS key (B) until CH005 appears in the digital display.
4. Release the COUNTER key. The current bale diameter sensor value is shown.

NOTE: The value displayed when the channel is first entered is the current calibration of the bale diameter sensor. If the tension arm is moved, then the current sensor reading is shown.

5. Press the PLUS key (B) and the MINUS key (C) simultaneously to calibrate the bale diameter display to the current sensor position. An audible beep is heard to confirm that the calibration has been saved.
6. Lower the tension arm.
7. Check the calibration in the field and fine-tune with CH028 adjustment. (See Adjust Bale Diameter Display [Channel 028] in Operating the Baler section.)

SF04007,0001224-19-08JAN19

Adjust Bale Shape Sensor—In Shop Procedure (Channels 007 and 009)

NOTE: Number of the bale shape indicator bars displayed is 24.

Bale shape gauge strap (A) is available through your John Deere dealer.

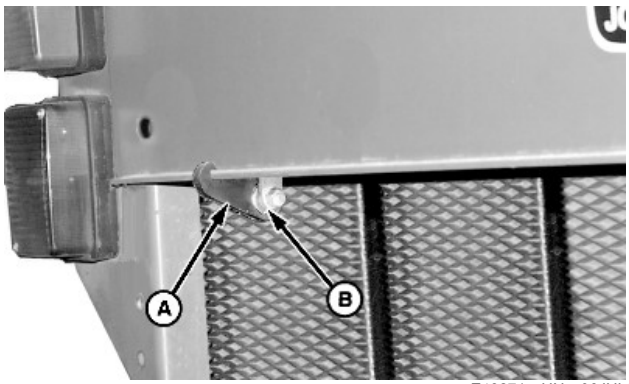

E48271—UN—06JUL00

Left-Hand Side Shown

A—Bale Shape Gauge Strap
B—Bearing

1. If bale shape gauge strap (A) is used:
   a. Install strap (A) over the roller bearing (B).
   b. Attach end of the strap over the baler frame cross-member. Make sure lip of cross-member is seated on strap.

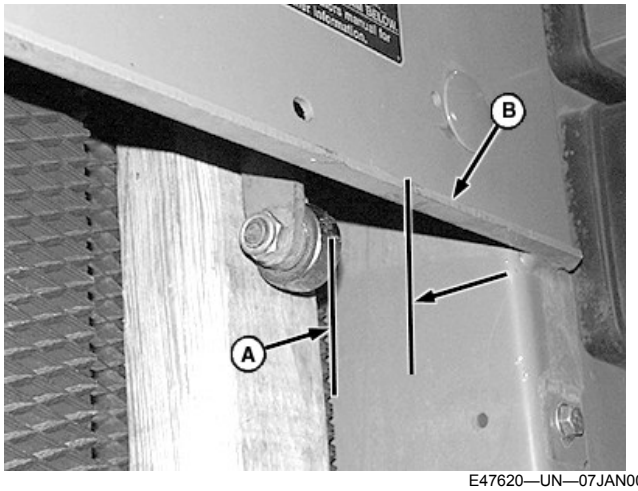

E47620—UN—07JAN00

Right-Hand Side Shown

A—Dimension
B—Rear Edge of Panel

2. If bale shape gauge strap is not used:

a. Put a board approximately 51 x 102 x 457 mm (2 x 4 x 18 in) between the roller bearing and belt as shown.

b. Position board to hold bale shape sender arm so rear of the roller bearing is 62 mm (2-7/16 in) (A) from the rear edge of panel (B).

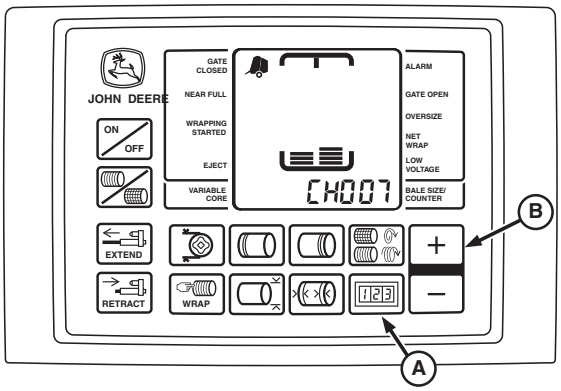

E82740—UN—21APR17

BaleTrak™ Pro Monitor

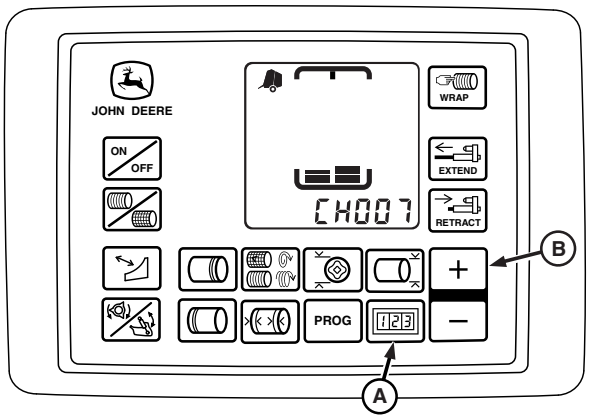

E84256—UN—29AUG17

BaleTrak™ Plus Monitor

A—COUNTER Key
B—PLUS Key

3. Press and hold COUNTER key (A) while turning monitor-controller ON.
4. Continue to hold COUNTER key (A) and press PLUS key (B) until:
   - CH007 is displayed to adjust right side
   - CH009 is displayed to adjust left side
5. Release COUNTER key (A) to display sensor value.
6. Press the PLUS and MINUS keys simultaneously to save the calibrations.
7. To adjust the opposite side, repeat the procedure. Use appropriate channel for adjustment.

DP99999,0000DB7-19-06SEP17

Test Oversize Bale Switch (Channel 013)

1. Turn the tractor ignition key to the ON position. Do not start the tractor engine.

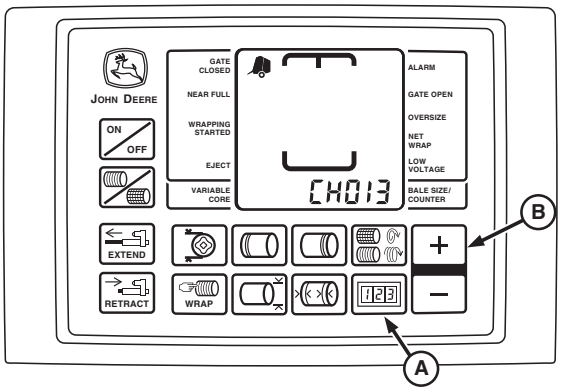

E52528—UN—31AUG17

BaleTrak™ Pro Monitor

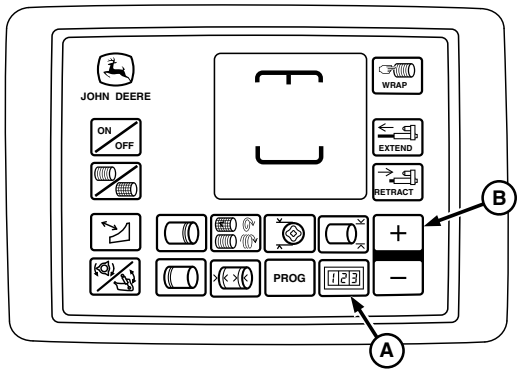

E84402—UN—31AUG17

BaleTrak™ Plus Monitor

A—COUNTER Key
B—PLUS Key

2. Press and hold the COUNTER key (A) while turning the monitor-controller ON.
3. Continue to hold the COUNTER key and press the PLUS key (B) until the digital display shows CH013.
4. Release the keys and view the reading on the display. Verify that the display reads 012.
5. Open the side door and depress the switch actuator. Verify that the display reads 00 and the alarm tone sounds.

NOTE: Tension arm must be fully raised for oversize bale switch to be depressed.

6. Start the tractor engine. Using the SCV lever, raise the gate to full height.
7. Verify that the display reads 00 and the alarm tone sounds.

Diagnostic Channel	Function	Display Reading Switch Open	Display Reading Switch Closed
013	Oversize Bale Switch	012	00 (Tone)

8. If readings are not as shown, adjust switch position and test again. (See ADJUST OVERSIZE BALE SWITCH in Service-Baler section.)
9. If switch adjustment does not produce normal readings:
   a. Turn the monitor-controller OFF. Turn the tractor key to the OFF position and remove the key.
   b. Check the wire harness for cuts and breaks.
   c. Check harness connectors for damaged (pushed back) terminals.
   d. Check for correct wire connections. (See WIRE HARNESS DIAGRAM—BALER in Service—Baler section.)
   e. Replace switch if necessary. (See your John Deere dealer or qualified service provider.)

DP99999,0000E0C-19-26SEP17

Test Gate Latch Proximity Switches (Channels 014 and 015)

1. Turn the tractor ignition key to the ON position. Start the tractor engine. Using the SCV lever, ensure that the gate is fully closed.

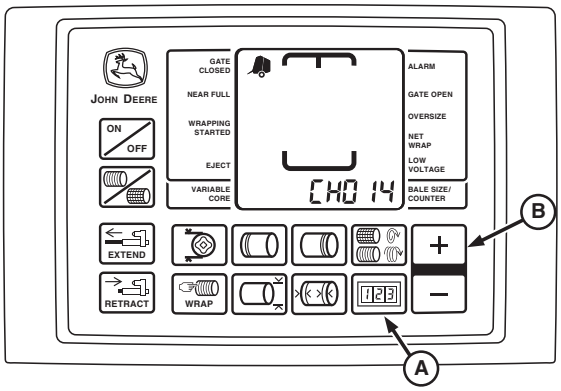

E84666—UN—27SEP17

BaleTrak™ Pro Monitor

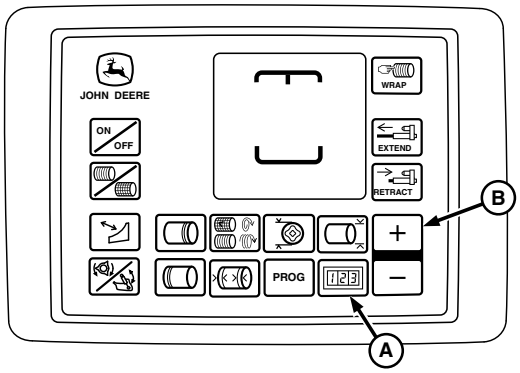

E84402—UN—31AUG17

BaleTrak™ Plus Monitor

A—COUNTER Key
B—PLUS Key

2. Press and hold the COUNTER key (A) while turning the monitor-controller ON.
3. Continue to hold the COUNTER key and press the PLUS key (B) until the digital display shows CH014.
4. Release the keys and view the reading on the display. Verify that the display reads 012.
5. Using the SCV lever, raise the gate to full height.
6. Verify that the display reads 00 and the alarm tone sounds.
7. Using the SCV lever, close the gate. Verify that the display changes back to 12 and the alarm tone goes off.
8. Press the PLUS key until the digital display shows CH015.
9. Release the keys and view the reading on the display. Verify that the display reads 012.
10. Using the SCV lever, raise the gate to full height.
11. Verify that the display reads 00 and the alarm tone sounds.

Diagnostic Channel	Function	Display Reading Switch Open (Gate Closed)	Display Reading Switch Closed (Gate Open)
014	Right-Hand Gate Latch Proximity Switch	012	00 (Tone)
015	Left-Hand Gate Latch Proximity Switch	012	00 (Tone)

12. Using the SCV lever, close the gate. Verify that the display changes back to 12 and the alarm tone goes off.
13. If readings are not as shown, adjust switch position and test again. (See ADJUST GATE LATCH PROXIMITY SWITCHES in Service-Baler section.)

14. If switch adjustment does not produce normal readings:
    a. Turn the monitor-controller OFF. Turn the tractor key to the OFF position and remove the key.
    b. Check the wire harness for cuts and breaks.
    c. Check harness connectors for damaged (pushed back) terminals.
    d. Check for correct wire connections. (See WIRE HARNESS DIAGRAM—BALER in Service—Baler section.)
    e. Replace switch if necessary. (See your John Deere dealer or qualified service provider.)

DP99999,0000E30-19-27SEP17

Test Twine or Net Wrap Actuator Current (Channel 018)

IMPORTANT: Current overload protection to the twine actuator is bypassed when using channel 018. Extended use of channel 018 can cause actuator damage.

NOTE: Channel 018 allows the operator to use the EXTEND key (B) and the RETRACT key (C) to position the actuator for service.

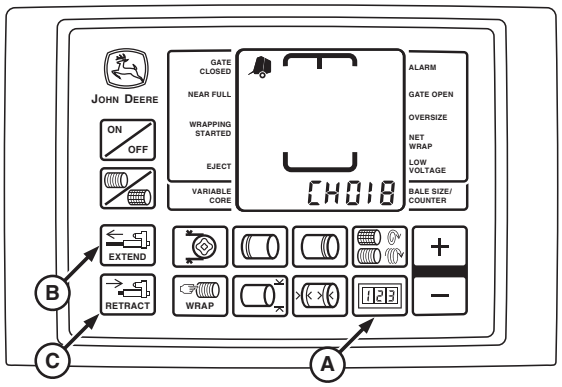

E52520—UN—26JUN03

BaleTrak™ Pro Monitor

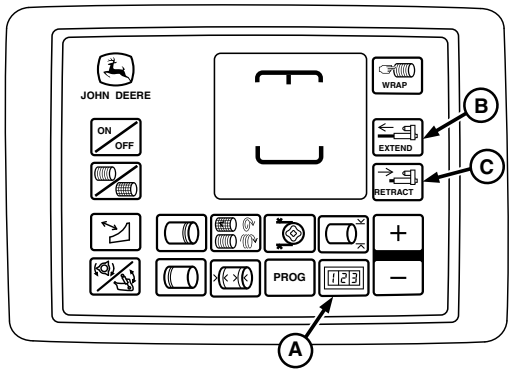

E84427—UN—06SEP17

BaleTrak™ Plus Monitor

A—COUNTER Key
B—EXTEND Key
C—RETRACT Key

This test is used to determine the working condition of the actuator through its entire range of operation.

To Test Actuator (Motor and Linkage):

IMPORTANT: Remove the roll of net wrap material from the baler if testing the net actuator voltage. Otherwise, if the PTO is engaged with the net actuator extended, net feeds into the empty baler and can cause damage to the pickup or rotary feed system.

1. If testing net and wrap actuator current, remove the roll of net wrap material from the baler.
2. Turn the tractor ignition key to the ON position. Do not start the tractor engine.
3. Press and hold the COUNTER key (A) while turning the monitor-controller ON.
4. Continue to hold the COUNTER key and press the PLUS key until **CH018** appears in the digital display.
5. Release the COUNTER key; the digital display changes to show the actuator static current flow reading of **0** to **1**.
6. Use the EXTEND key (B) and the RETRACT key (C) to operate the actuator in both directions. The display must show a current flow reading between **1** and **8** while the actuator motor is operating during mid stroke (no load).
    - Below normal readings indicate low tractor voltage, or poor or corroded harness connections
    - Above normal readings indicate binding linkage or partially shorted motor windings
    - A spike in the current reading indicates a mechanical obstruction to the linkage
7. Continue to operate the actuator to the fully retracted position. The display must show a stall (*load*) current reading between **22** and **30**.

- Below normal reading indicates bad or corroded harness connections
- Above normal reading indicates partially shorted motor windings or actuator binding

8. Press the RETRACT key to move the actuator to the home position.
9. Turn the monitor-controller OFF. Turn the tractor ignition key to the OFF position and remove the key.

DP99999,0000E09-19-06SEP17

Test Tractor Convenience Outlet Voltage (Channel 019)

Complete the following check to determine if the convenience outlet provides adequate power to the BaleTrak™ system.

IMPORTANT: Remove the roll of net wrap material from the baler if testing the net actuator voltage. Otherwise, if PTO is engaged with the net actuator extended, net feeds into the empty baler and can damage the pickup or rotary feed system.

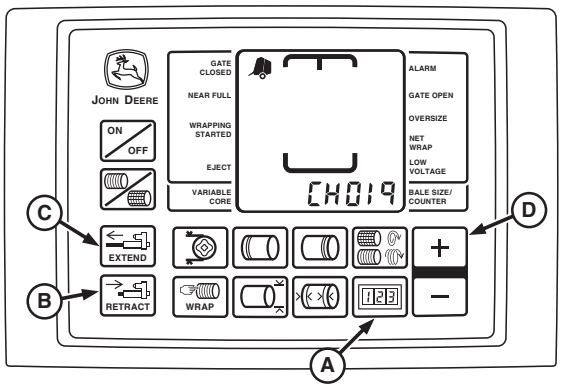

E52521—UN—26JUN03

A—COUNTER Key
B—RETRACT Key
C—EXTEND Key
D—PLUS Key

1. If testing the net wrap actuator current, remove the roll of net wrap material from the baler.
2. Start the tractor engine.
3. Press and hold the COUNTER key (A) while turning the monitor-controller ON.
4. Continue to hold the COUNTER key and press the PLUS key (D) until **CH019** appears in the digital display.
5. Release the COUNTER key and view the voltage readout.
6. Using the EXTEND key (C), extend the twine or net actuator slightly.
7. Push and hold the RETRACT key (B) until the actuator stalls out in the fully retracted position. Note the voltage displayed during the first 4 seconds after stalling.

Specification	
Convenience Outlet—Voltage (Minimum)	9.7 V

8. If the voltage is less than specification, see your John Deere dealer for the proper convenience outlet kit. The proper kit must be used to provide a convenience outlet with the proper wire size and a 30 A circuit breaker. When installing this kit, connect the power and ground wires directly to the battery terminal clamp bolts. (See TRACTOR CONVENIENCE OUTLET in Preparing the Tractor section.)

CAUTION: The convenience outlet is wired directly to the battery. Turning off the tractor ignition key does not disconnect power to the monitor.

9. Turn the monitor-controller OFF. Turn the tractor ignition key to the OFF position and remove the key.

   Disconnect the power cable from the monitor when working around the knife arm. Turning off the tractor ignition key does NOT turn off power to the monitor.

DP99999,0000DDB-19-14AUG17

Test Liquid Crystal Display (LCD) Panel (Channel 020)

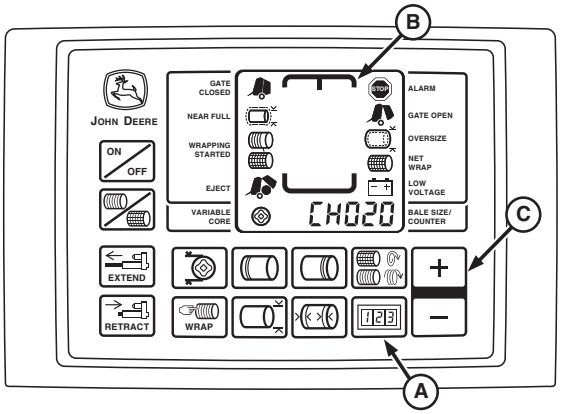

E52529—UN—10JUN08

BaleTrak™ Pro Monitor

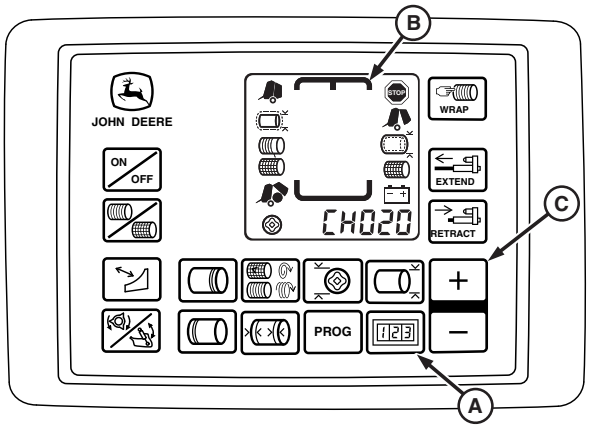

E84257—UN—30AUG17

BaleTrak™ Plus Monitor

A—COUNTER Key
B—LCD Panel
C—PLUS Key

Use the following test procedure to check if a segment of the LCD panel has failed.

1. Turn the tractor ignition key to the ON position. Do not start the tractor engine.
2. Press and hold the COUNTER key (A) while pressing the TWINE or NET key to turn the monitor-controller ON.
3. Continue to hold the COUNTER key and press the PLUS key (C) until **CH020** appears in the digital display.

NOTE: The number of bale shape indicator bars displayed is 24 bars per side.

4. Release the keys and view the entire LCD panel (B). Make sure that all segments and indicators are displayed. If not, see your John Deere dealer.
5. Turn the monitor-controller OFF. Turn the tractor ignition key to the OFF position and remove the key.

DP99999,0000E16-19-05SEP17

Twine Arm Calibration (Channel 029)

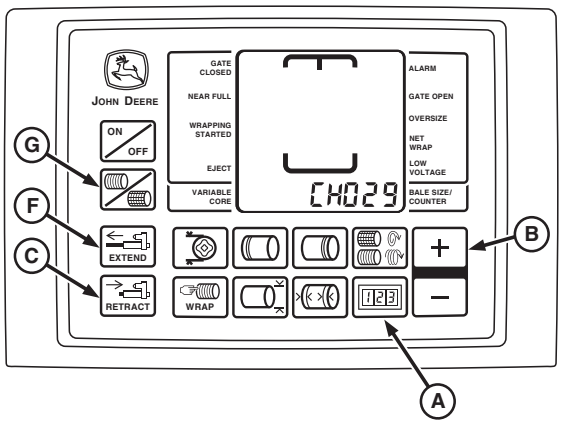

E52575—UN—10JUL03

BaleTrak™ Pro Monitor

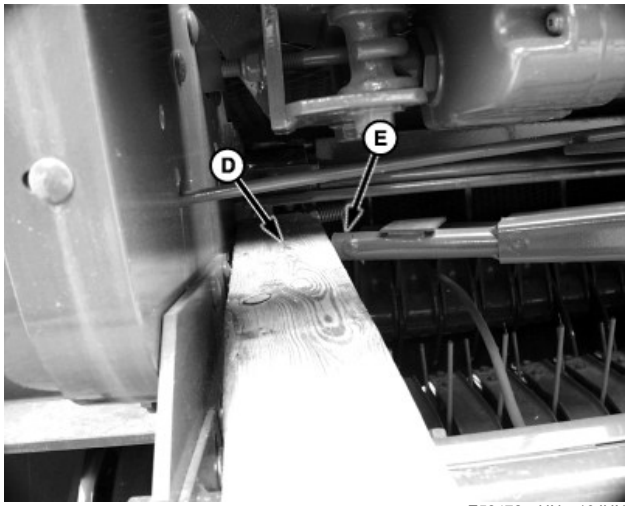

E52472—UN—19JUN03

A—COUNTER Key
B—PLUS Key
C—RETRACT Key
D—Wood Block
E—Twine Arm
F—EXTEND Key
G—TWINE or NET Key

1. Turn the tractor ignition key to the ON position. Do not start the tractor engine. Turn the monitor-controller ON.
2. Briefly press the TWINE or NET key (G). Ensure that the monitor-controller is in the TWINE mode (indicator will briefly show on screen).
3. Turn the monitor-controller OFF.
4. Press and hold the COUNTER key (A) while turning the monitor ON.
5. Continue to hold the COUNTER key and press the PLUS key (B) until **CH029** appears in the digital display. Release both keys.
6. Press and hold the RETRACT key (C) until the twine actuator fully retracts and the display reads zero.

NOTE: 89 mm equals 3-1/2 in, which is standard dimension for most 4 inch wide lumber, such as a 2 x 4 or 4 x 4.

7. Place an 89 mm (3-1/2 in) wood block (D) on the right-hand side of the bale chamber, so that the twine arm (E) contacts the wood block when the actuator is extended.
8. Press the EXTEND key (F) and extend the actuator until it stalls by contacting the wood block.
9. Enter the value displayed in to memory by pressing the PLUS and MINUS keys together and listening for two confirming beeps.
10. Press the RETRACT key (C) to release the wood block.

DP99999,0000DCB-19-20SEP17

Turn Net Wrap, Slip Clutch Alert, and Variable Core Features On and Off

The following features must be activated before operation. These features can also be turned off if desired.

Feature	Channel	ON	OFF
Net Wrap Operation (if equipped)	203	1	0
PTO Sensor	204	540 or 1000	0
Pickup Sensor (MegaWide™ Plus Pickup)	205	310	0
Pickup Sensor (MegaWide™ HC2 Pickup)	205	170	0
Variable Core Valve (if equipped)	208	1	0

Turning Features On and Off:

1. Turn the tractor ignition key to the ON position. Do not start the tractor engine.
2. Access the setup channels in the monitor-controller as follows:
   a. **BaleTrak™ Pro Monitor:** Press and hold both the COUNTER key and the NUMBER OF WRAPS key while turning the monitor-controller ON.
   b. **BaleTrak™ Plus Monitor:** Press and hold both the COUNTER key and the BALE DIAMETER key while turning the monitor-controller ON.
   c. Verify that **CH201** is displayed on the monitor.
3. Release both keys. Verify that the correct baler model number is displayed.
4. Press and hold the COUNTER key and press the PLUS key until the desired channel is shown in the display.
5. Release the COUNTER key.
6. Press the PLUS or MINUS key to change the display to the desired value.
7. Turn the monitor-controller OFF.
8. Turn the tractor ignition key to the OFF position and remove the key.

- Accessing channel 205 and changing the value to 0 turns off the slip alert feature. Shutting off the pickup sensor on channel 205 still allows automatic speed compensation during the wrapping cycle.
- The entire system can be turned off by changing the channel 204 value to 0.

Slip Clutch Alert System

1. Changing the channel 204 setting to 0 disables the entire slip clutch alert system.
2. Changing the channel 205 setting to 0 turns the pickup drive speed sensor OFF. If the PTO speed sensor (channel 204) remains ON, the system still provides automatic speed compensation during the wrapping cycle.

DP99999,0000DB5-19-15SEP17

End of Season

1. Move baler to a dry place. If the baler must be stored outside, belt life can be prolonged by covering or removing belts to protect from sunlight and ozone exposure.
2. Remove twine from twine boxes. Store twine inside during the storage season.

   If the net wrap is installed, remove roll of the net wrap material and store in a cool, dry place.
3. Clean baler thoroughly inside and out. Trash and dirt draw moisture and cause rust.
4. Apply a few drops of oil to all pivot points and linkages.
5. Thoroughly lubricate the baler. (See Lubrication and Maintenance section.)
6. Apply a thin layer of grease to threads of all adjustment bolts.
7. If equipped with push bar, apply a thin layer of grease to exposed rods of push bar shock absorbers.
8. Paint all parts of the net wrap from which paint has been worn.

   Paint surfaces of mechanism, especially inside surfaces of the net wrap box and net pan. Do not get paint on the rubber feed roll.
9. Coat chains with oil.
10. If equipped with a fire extinguisher, follow manufacturers recommendation for inspection and maintenance. If the baler is subjected to cold weather, drain or treat fire extinguisher fluid with a nonflammable antifreeze solution to prevent damage.
11. Check all belt guides for wear especially wear channels at rear of the tension arm. (See As Required—Tension Arm Wear Channels in Lubrication and Maintenance section).
12. Order replacement parts as needed.

SF04007,0000FFE-19-27OCT17

Start of Season

1. Check and fill gear case to the dipstick level. (See Lubrication and Maintenance section.)
2. Lubricate complete machine. (See Lubrication and Maintenance section.) This procedure removes moisture out of the bearings.
3. Check tires for correct air pressure.
4. Make sure that the main drive slip clutch is free to slip. If the clutch does not slip, damage to the drivetrain can occur. (See Slip Main PTO Driveline Slip Clutch in Service—Baler section.)
5. Baler is equipped with the pickup slip clutch. Ensure that the slip clutch is free to slip. (See Check Pickup Slip Clutch Torque [MegaWide™ Plus] in Service—Baler section.)
6. Tighten all hardware.
7. Check all belt splice pins for breakage and wear. Replace as necessary.
8. If equipped with a fire extinguisher, follow manufacturers recommendation for inspection and maintenance. Refill, pressurize, and test the fire extinguisher.
9. Review operator's manual and check adjustments.
10. If equipped with gathering wheel, lubricate fittings and trip wheel. If the wheel does not pivot freely by hand, remove wheel bracket from tube. Apply grease to pivoting surfaces and reassemble.
11. Check function of oversize bale alarm. (See Adjust Gate Latch Proximity Switches And Oversize Bale Switch in Service—Baler section.)
12. Check bale diameter display. Actual bale diameter must match monitor bale diameter display. (See Adjust Bale Diameter Display [Channel 028] in Operating the Baler section.)
13. If the net wrap unit is installed, check areas that can contact the net wrap. These areas must be clean and smooth to help prevent mesh wrappage on rubber roll. Polish all of sheet metal area until smooth using Scotch-Brite® or ultra-fine sandpaper. When using sandpaper, polish marks must be parallel to movement of mesh. (See Net Wrap Use After Extended Storage in Service-Net Wrap section.)
14. If the net wrap unit is installed, remove and clean brush behind cut-off knife. (See Remove And Install Knife in Service-Net Wrap section.)

SF04007,0000FFD-19-27OCT17

Scotch-Brite is a trademark of 3M Co.

460M Round Baler Specifications

NOTE: Specifications and design are subject to change without notice.

Baler Dimensions

Length: Gate Closed (without COVER-EDGE™ Net Wrap)	3708 mm (146 in)
Length: Gate Closed (with COVER-EDGE™ Net Wrap)	4150 mm (163.4 in)
Length: Gate Open	4750 mm (187 in)
Height: Gate Closed	2794 mm (110 in)
Height: Gate Open	3683 mm (145 in)
Width: MegaWide™ Plus Pickup with Gauge Wheels	2516 mm (99.1 in)
Width: 21.5L x 16.1 Tires	2934 mm (115.5 in)

Bale

Diameter	813—1829 mm (32—72 in)
Width	1168 mm (46 in)
Typical Weight[a]	748 kg (1650 lb)
Maximum Weight	998 kg (2200 lb)

[a]*Depending on crop conditions.*

MegaWide™ Plus Pickup

Width: Inside	1586 mm (62.4 in)
Width: On Flare	1803 mm (71 in)
Width: Between Outer Teeth	1518 mm (59.7 in)
Drive	Roller chain with slip clutch
Toothbars	4
Number of Center Teeth	40 (80 tines)
Number of Outside (Mega) Teeth	16 (16 tines)
Tooth Spacing	66 mm (2.6 in)
Stripper Diameter	254 mm (10 in)
Slip Clutch Alert	Standard

Forming Belts

Number	6
Width	178 mm (7 in)
Type	DiamondTough™, diamond tread, friction surface, with plate-type splices
Length	(2) 13 305 mm (524 in) (4) 13 445 mm (529 in)

Bale Wrap (BaleTrak™ Pro)

Type	Twine wrap (standard) COVER-EDGE™ Net wrap (if equipped)
Control	Self-activating; automatic at desired bale size
Actuator Type	Electric, double twine arm
Twine Spacing	Adjustable

Electrical Bale Forming Indicators

Bale Shape	BaleTrak™ Pro
Bale Size Alert	BaleTrak™ Pro

Gear Case Oil Capacity

Oil Capacity	1.2 L (1.25 qt)
Oil Capacity (HC2 Feed System Only)	1.35 L (1.43 qt)

Tire Size

Standard	14L x 16.1, 8 ply rating
Optional with MegaWide™ Plus Pickup	21.5L x 16.1, 10 ply rating

Power Train

PTO Shaft Speed	540 or 1000 rpm
Drive Protection	Slip clutch
Drive Protection (HC2 Feed System Only)	Cam clutch

Tractor Recommended

Minimum Power	48.5 kW (65 hp)
Hydraulics (recommended)	
Control Valve	One double-acting selective control valve. Two, if equipped with hydraulic pickup lift.
Flow (minimum)	22.7—24.6 L/min (6—6.5 gal/min)

DP99999,0000D45-19-10AUG17

460M Round Baler (with Powered Auger Scraper)—Specifications

Baler Dimensions

Length: Gate Closed (without COVER-EDGE™ Net Wrap)	3708 mm (146 in)
Length: Gate Closed (with COVER-EDGE™ Net Wrap)	4150 mm (163.4 in)
Length: Gate Open	4750 mm (187 in)
Height: Gate Closed	2794 mm (110 in)
Height: Gate Open	3683 mm (145 in)
Width: MegaWide™ Plus Pickup with Gauge Wheels	2516 mm (99.1 in)
Width: 21.5L x 16.1 Tires	2934 mm (115.5 in)

Bale

Diameter	813—1829 mm (32—72 in)
Width	1168 mm (46 in)
Typical Weight[a]	748 kg (1650 lb)
Maximum Weight	998 kg (2200 lb)

[a] *Depending on crop conditions.*

MegaWide™ Plus Pickup

Width: Inside	1586 mm (62.4 in)
Width: On Flare	1803 mm (71 in)
Width: Between Outer Teeth	1518 mm (59.7 in)
Drive	Roller chain with slip clutch
Toothbars	4
Number of Center Teeth	40 (80 tines)
Number of Outside (Mega) Teeth	16 (16 tines)
Tooth Spacing	66 mm (2.6 in)
Stripper Diameter	254 mm (10 in)
Slip Clutch Alert	Standard

Forming Belts

Number	6
Width	178 mm (7 in)
Type	DiamondTough™, diamond tread, friction surface, with plate-type splices
Length	(2) 13 305 mm (524 in) (4) 13 445 mm (529 in)

Bale Wrap (BaleTrak™ Pro)

Type	Twine wrap (standard) COVER-EDGE™ Net wrap (if equipped)
Control	Self-activating; automatic at desired bale size
Actuator Type	Electric, double twine arm
Twine Spacing	Adjustable

Mechanical Bale Forming Indicators

Bale Shape	BaleTrak™ Pro
Bale Size Alert	BaleTrak™ Pro

Gear Case Oil Capacity

Oil Capacity	1.2 L (1.25 qt)
Oil Capacity (HC2 Feed System Only)	1.35 L (1.43 qt)

Tire Size

Standard	14L x 16.1, 8 ply rating
Optional with MegaWide™ Plus Pickup	21.5L x 16.1, 10 ply rating

Power Train

PTO Shaft Speed	540 or 1000 rpm
Drive Protection	Slip clutch

Tractor Recommended

Minimum Power	48.5 kW (65 hp)
Hydraulics (recommended)	
Control Valve	One double-acting selective control valve. Two, if equipped with hydraulic pickup lift.
Flow (minimum)	22.7—24.6 L/min (6—6.5 gal/min)

DP99999,0000D46-19-10AUG17

560M Round Baler Specifications

NOTE: Specifications and design are subject to change without notice.

Baler Dimensions

Length: Gate Closed (without COVER-EDGE™ Net Wrap)	3708 mm (146 in)
Length: Gate Closed (with COVER-EDGE™ Net Wrap)	4150 mm (163.4 in)
Length: Gate Open	4750 mm (187 in)
Height: Gate Closed	2794 mm (110 in)
Height: Gate Open	3683 mm (145 in)
Width: Regular Pickup with Gauge Wheels	2516 mm (99.1 in)
Width: MegaWide™ Plus Pickup with Gauge Wheels	2882 mm (113.5 in)
Width: 21.5L x 16.1 Tires	3353 mm (132 in)

Bale

Diameter	813—1829 mm (32—72 in)
Width	1565 mm (61.6 in)
Typical Weight[a]	998 kg (2200 lb)
Maximum Weight	1089 kg (2400 lb)

[a]*Depending on crop conditions.*

Regular Pickup

Width: Inside	1560 mm (61.4 in)
Width: On Flare	1803 mm (71 in)
Width: Between Outer Teeth	1519 mm (59.8 in)
Drive	Roller chain with V-belt
Toothbars	4
Number of Teeth	48 (96 tines)
Tooth Spacing	66 mm (2.6 in)
Stripper Diameter	254 mm (10 in)
Slip Clutch Alert	Standard

MegaWide™ Plus Pickup

Width: Inside	1982 mm (78 in)
Width: On Flare	2210 mm (87 in)
Width: Between Outer Teeth	1914 mm (75.3 in)
Drive	Roller chain with slip clutch
Toothbars	4 Left-Hand and 4 Right-Hand
Number of Center Teeth	56 (112 tines)
Number of Outside (Mega) Teeth	8 (8 tines)
Tooth Spacing	66 mm (2.6 in)
Stripper Diameter	254 mm (10 in)
Slip Clutch Alert	Standard

Forming Belts

Number	8
Width	178 mm (7 in)
Type	DiamondTough™, diamond tread, friction surface, with plate-type splices
Length	(4) 13 305 mm (524 in) (4) 13 445 mm (529 in)

Bale Wrap (BaleTrak™ Pro)

Type	Twine wrap or COVER-EDGE™ Net wrap Twine wrap and COVER-EDGE™ Net wrap
Control	Self-activating; automatic at desired bale size
Actuator Type	Electric, double twine arm
Twine Spacing	Adjustable

Electrical Bale Forming Indicators

Bale Shape	BaleTrak™ Pro
Bale Size Alert	BaleTrak™ Pro

Gear Case Oil Capacity

Oil Capacity	1.2 L (1.25 qt)
Oil Capacity (HC2 Feed System Only)	1.35 L (1.43 qt)

Tire Size

Standard	14L x 16.1, 8 ply rating
Optional with MegaWide™ Plus Pickup	21.5L x 16.1, 10 ply rating

Power Train

PTO Shaft Speed	540 or 1000 rpm
Drive Protection	Slip clutch

Tractor Recommended

Minimum Power	56 kW (75 hp)
Hydraulics (recommended)	
Control Valve	One double-acting selective control valve. Two, if equipped with hydraulic pickup lift.
Flow (minimum)	22.7—24.6 L/min (6—6.5 gal/min)

DP99999,0000D47-19-10AUG17

560M Round Baler (with Powered Auger Scraper)—Specifications

NOTE: Specifications and design are subject to change without notice.

Baler Dimensions

Length: Gate Closed (without COVER-EDGE™ Net Wrap)	3708 mm (146 in)
Length: Gate Closed (with COVER-EDGE™ Net Wrap)	4150 mm (163.4 in)
Length: Gate Open	4750 mm (187 in)
Height: Gate Closed	2794 mm (110 in)
Height: Gate Open	3683 mm (145 in)
Width: MegaWide™ Plus Pickup with Gauge Wheels	2882 mm (113.5 in)
Width: 21.5L x 16.1 Tires	3353 mm (132 in)

Bale

Diameter	813—1829 mm (32—72 in)
Width	1565 mm (61.6 in)
Typical Weight[a]	998 kg (2200 lb)
Maximum Weight	1089 kg (2400 lb)

[a]*Depending on crop conditions.*

MegaWide™ Plus Pickup

Width: Inside	1982 mm (78 in)
Width: On Flare	2210 mm (87 in)
Width: Between Outer Teeth	1914 mm (75.3 in)
Drive	Roller chain with slip clutch
Toothbars	4 Left-Hand and 4 Right-Hand
Number of Center Teeth	56 (112 tines)
Number of Outside (Mega) Teeth	8 (8 tines)
Tooth Spacing	66 mm (2.6 in)
Stripper Diameter	254 mm (10 in)
Slip Clutch Alert	Standard

Forming Belts

Number	8
Width	178 mm (7 in)
Type	DiamondTough™, diamond tread, friction surface, with plate-type splices
Length	(4) 13 305 mm (524 in) (4) 13 445 mm (529 in)

Bale Wrap

Type	Twine wrap (standard) COVER-EDGE™ Net wrap (if equipped)
Control	Self-activating; automatic at desired bale size
Actuator Type	Electric, double twine arm
Twine Spacing	Adjustable

Electrical Bale Forming Indicators

Bale Shape	BaleTrak™
Bale Size Alert	BaleTrak™

Gear Case Oil Capacity

Oil Capacity	1.2 L (1.25 qt)
Oil Capacity (HC@ Feed System Only)	1.35 L (1.43 qt)

Tire Size

Standard	14L x 16.1, 8 ply rating
Optional with MegaWide™ Plus Pickup	21.5L x 16.1, 10 ply rating

Power Train

PTO Shaft Speed	540 or 1000 rpm
Drive Protection	Slip clutch

Tractor Recommended

Minimum Power	56 kW (75 hp)
Hydraulics (recommended)	
Control Valve	One double-acting selective control valve. Two, if equipped with hydraulic pickup lift.
Flow (minimum)	22.7—24.6 L/min (6—6.5 gal/min)

DP99999,0000D48-19-10AUG17

BaleTrak™ Monitor-Controller Specifications

BaleTrak™ Monitor-Controller

Near-Full Bale	Indicator displayed and audible alarm
Full Bale	Indicator displayed and audible alarm
Auto-Wrap	Indicator displayed and audible alarm
Oversize Bale Protection	STOP or oversize indicator and audible alarm
Gate Closed	Indicator displayed
Nighttime Operation	Display area backlight
Continuous Twine Application	Indicator displayed
Net Wrap Application	Indicator displayed
Auto Wrap Cycle	Activates when bale reaches preset size
Gate Closed	Indicator displayed
Bale Full Size—Wrapping Started	Indicator displayed
Wrapping Completed—Eject Bale	Indicator displayed
Bale Shape	Vertical bars displayed: 24 each column
Wrap of Undersize Bale	Touch wrap key
Bale Size Indicator	Digital display
Set Bale Size	Touch bale size key and touch plus or minus key
Set Twine Spacing or Net Wraps	Touch key and touch plus or minus key
Set Number of End Wraps, Right or Left	Touch key and touch plus or minus key
Set End Wrap Location, Right or Left	Touch key and touch plus or minus key
Set Re-extension and Cinch Wrap	Hold key and touch plus or minus key

BaleTrak™ Monitor-Controller

Out of Net Wrap	STOP indicator displayed and audible alarm
Surface Wrap Cutoff	Indicator displayed
Selection of Twine or Net Wrap	Touch and hold twine/net key
Control of Variable Core	Diameter setting and on-off key
On Board Diagnostics	Digital LCD
Bale Counters	Resettable and total
Manual Actuator Movement with Electronic By-pass	Separate switch in harness
Low Voltage Indicator	Indicator displayed
Change Baler Model	Touch key and touch plus or minus key

DP99999,0000DFA-19-10AUG17

Tractor Compatibility

IMPORTANT: See tractor operator's manual for proper ballast.

460M and 560M Baler Tractor Compatibility (1 of 2)					
	Tractor Requirements				
Model No.	Recommended PTO Horsepower	Implement Weight (goes into tractor ballast calculation)	7-Pin Connector Required	Number of SCV Pairs	Hydraulic Minimum Flow Rate from SCV
460M	48 kW (65 hp) minimum	2764 kg (6094 lb)	Yes	One (two if equipped with hydraulic pickup lift)	22.7—24.6 L/min (6—6.5 gal/min)
560M	56 kW (75 hp) minimum	3362 kg (7412 lb)	Yes	One (two if equipped with hydraulic pickup lift)	22.7—24.6 L/min (6—6.5 gal/min)

460M and 560M Baler Tractor Compatibility (2 of 2)								
		Tractor Requirements						
Model No.	PTO Speed	Road Speed Maximum Limit	Drawbar Vertical Capacity	Drawbar Size	Electrical System Voltage	Electrical System Amps	Electrical System Grounding	Tractor Cab Required
460M	540 or 1000 available	32 km/h (20 mph)	658 kg (1452 lb)	Accept up to 51 mm (2 in) thick drawbar	12 V	20	Negative	No
460M HC2	59.7 kW (80 hp) minimum at 540 rpm				63.4 kW (85 hp) minimum at 1000 rpm			
560M	540 or 1000 available	32 km/h (20 mph)	714 kg (1573 lb)	Accept up to 51 mm (2 in) thick drawbar	12 V	20	Negative	No
560M HC2	59.7 kW (80 hp) minimum at 540 rpm				63.4 kW (85 hp) minimum at 1000 rpm			

DP99999,0000D49-19-05OCT17

Hitch Weights

NOTE: Weights are with typical optional equipment. Weights with other optional equipment can vary.

The maximum static vertical load for these machines is achieved with the bale chamber empty.

Maximum Static Vertical Load on Tractor Drawbar—Specification

	Specification
460M Baler—Weight on Drawbar	658 kg (1452 lb)

Specification	
560M Baler—Weight on Drawbar	714 kg (1573 lb)

DP99999,0000D4A-19-10MAY17

Metric Bolt and Screw Torque Values

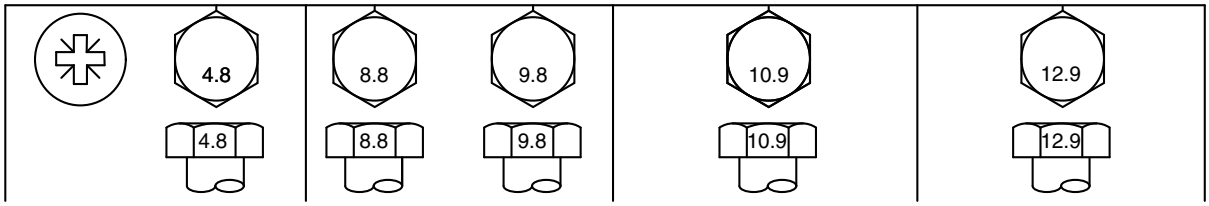

TS1742—UN—31MAY18

Bolt or Screw Size	Class 4.8				Class 8.8 or 9.8				Class 10.9				Class 12.9			
	Hex Head[a]		Flange Head[b]		Hex Head[a]		Flange Head[b]		Hex Head[a]		Flange Head[b]		Hex Head[a]		Flange Head[b]	
	N·m	lb·in	N·m	lb·in	N·m	lb·in	N·m	lb·in	N·m	lb·in	N·m	lb·in	N·m	lb·in	N·m	lb·in
M6	3.6	31.9	3.9	34.5	6.7	59.3	7.3	64.6	9.8	86.7	10.8	95.6	11.5	102	12.6	112
									N·m	lb·ft	N·m	lb·ft	N·m	lb·ft	N·m	lb·ft
M8	8.6	76.1	9.4	83.2	16.2	143	17.6	156	23.8	17.6	25.9	19.1	27.8	20.5	30.3	22.3
			N·m	lb·ft	N·m	lb·ft	N·m	lb·ft								
M10	16.9	150	18.4	13.6	31.9	23.5	34.7	25.6	46.8	34.5	51	37.6	55	40.6	60	44.3
	N·m	lb·ft														
M12	—	—	—	—	55	40.6	61	45	81	59.7	89	65.6	95	70.1	105	77.4
M14	—	—	—	—	87	64.2	96	70.8	128	94.4	141	104	150	111	165	122
M16	—	—	—	—	135	99.6	149	110	198	146	219	162	232	171	257	190
M18	—	—	—	—	193	142	214	158	275	203	304	224	322	245	356	263
M20	—	—	—	—	272	201	301	222	387	285	428	316	453	334	501	370
M22	—	—	—	—	365	263	405	299	520	384	576	425	608	448	674	497
M24	—	—	—	—	468	345	518	382	666	491	738	544	780	575	864	637
M27	—	—	—	—	683	504	758	559	973	718	1080	797	1139	840	1263	932
M30	—	—	—	—	932	687	1029	759	1327	979	1466	1081	1553	1145	1715	1265
M33	—	—	—	—	1258	928	1398	1031	1788	1319	1986	1465	2092	1543	2324	1714
M36	—	—	—	—	1617	1193	1789	1319	2303	1699	2548	1879	2695	1988	2982	2199

The nominal torque values listed are for general use only with the assumed wrenching accuracy of 20%, such as a manual torque wrench.
DO NOT use these values if a different torque value or tightening procedure is given for a specific application.
For lock nuts, for stainless steel fasteners, or for nuts on U-bolts, see the tightening instructions for the specific application.

Replace fasteners with the same or higher property class. If higher property class fasteners are used, tighten these to the strength of the original.

- Make sure that fastener threads are clean.
- Apply a thin coat of Hy-Gard™ or equivalent oil under the head and on the threads of the fastener, as shown in the following image.
- Be conservative with the amount of oil to reduce the potential for hydraulic lockup in blind holes due to excessive oil.
- Properly start thread engagement.

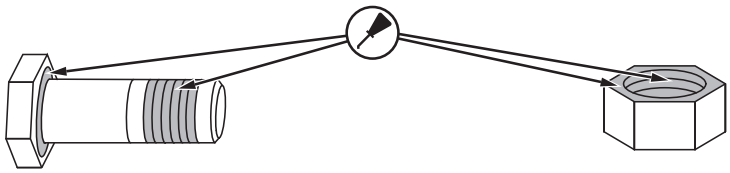

TS1741—UN—22MAY18

Bolt or Screw Size	Class 4.8		Class 8.8 or 9.8		Class 10.9		Class 12.9	
	Hex Head[a]	Flange Head[b]	Hex Head[a]	Flange Head[b]	Hex Head[a]	Flange Head[b]	Hex Head[a]	Flange Head[b]

[a]*Hex head column values are valid for ISO 4014 and ISO 4017 hex head, ISO 4162 hex socket head, and ISO 4032 hex nuts.*
[b]*Hex flange column values are valid for ASME B18.2.3.9M, ISO 4161, or EN 1665 hex flange products.*

DX,TORQ2-19-30MAY18

Unified Inch Bolt and Screw Torque Values

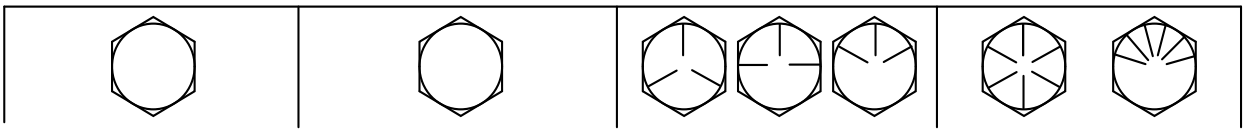

TS1671—UN—01MAY03

Bolt or Screw Size	SAE Grade 1[a]				SAE Grade 2[b]				SAE Grade 5, 5.1 or 5.2				SAE Grade 8 or 8.2			
	Hex Head[c]		Flange Head[d]		Hex Head[c]		Flange Head[d]		Hex Head[c]		Flange Head[d]		Hex Head[c]		Flange Head[d]	
	N·m	lb·in	N·m	lb·in	N·m	lb·in	N·m	lb·in	N·m	lb·in	N·m	lb·in	N·m	lb·in	N·m	lb·in
1/4	3.1	27.3	3.2	28.4	5.1	45.5	5.3	47.3	7.9	70.2	8.3	73.1	11.2	99.2	11.6	103
													N·m	lb·ft	N·m	lb·ft
5/16	6.1	54.1	6.5	57.7	10.2	90.2	10.9	96.2	15.7	139	16.8	149	22.2	16.4	23.7	17.5
									N·m	lb·ft	N·m	lb·ft				
3/8	10.5	93.6	11.5	102	17.6	156	19.2	170	27.3	20.1	29.7	21.9	38.5	28.4	41.9	30.9
					N·m	lb·ft	N·m	lb·ft								
7/16	16.7	148	18.4	163	27.8	20.5	30.6	22.6	43	31.7	47.3	34.9	60.6	44.7	66.8	49.3
	N·m	lb·ft	N·m	lb·ft												
1/2	25.9	19.1	28.2	20.8	43.1	31.8	47	34.7	66.6	49.1	72.8	53.7	94	69.3	103	75.8
9/16	36.7	27.1	40.5	29.9	61.1	45.1	67.5	49.8	94.6	69.8	104	77	134	98.5	148	109
5/8	51	37.6	55.9	41.2	85	62.7	93.1	68.7	131	96.9	144	106	186	137	203	150
3/4	89.5	66	98	72.3	149	110	164	121	230	170	252	186	325	240	357	263
7/8	144	106	157	116	144	106	157	116	370	273	405	299	522	385	572	422
1	216	159	236	174	216	159	236	174	556	410	609	449	785	579	860	634
1-1/8	305	225	335	247	305	225	335	247	685	505	751	554	1110	819	1218	898
1-1/4	427	315	469	346	427	315	469	346	957	706	1051	775	1552	1145	1703	1256
1-3/8	564	416	618	456	564	416	618	456	1264	932	1386	1022	2050	1512	2248	1658
1-1/2	743	548	815	601	743	548	815	601	1665	1228	1826	1347	2699	1991	2962	2185

The nominal torque values listed are for general use only with the assumed wrenching accuracy of 20%, such as a manual torque wrench.
DO NOT use these values if a different torque value or tightening procedure is given for a specific application.
For lock nuts, for stainless steel fasteners, or for nuts on U-bolts, see the tightening instructions for the specific application.

Replace fasteners with the same or higher property class. If higher property class fasteners are used, tighten these to the strength of the original.

- Make sure that fastener threads are clean.
- Apply a thin coat of Hy-Gard™ or equivalent oil under the head and on the threads of the fastener, as shown in the following image.
- Be conservative with the amount of oil to reduce the potential for hydraulic lockup in blind holes due to excessive oil.
- Properly start thread engagement.

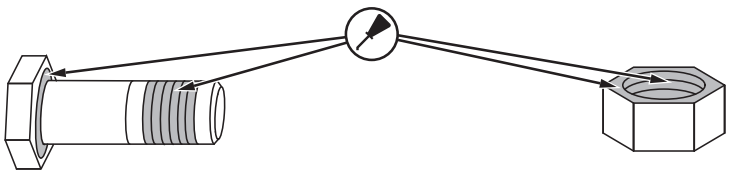

TS1741—UN—22MAY18

Bolt or Screw Size	SAE Grade 1[a]		SAE Grade 2[b]		SAE Grade 5, 5.1 or 5.2		SAE Grade 8 or 8.2	
	Hex Head[c]	Flange Head[d]	Hex Head[c]	Flange Head[d]	Hex Head[c]	Flange Head[d]	Hex Head[c]	Flange Head[d]

[a]Grade 1 applies for hex cap screws over 6 in (152 mm) long, and for all other types of bolts and screws of any length.
[b]Grade 2 applies for hex cap screws (not hex bolts) up to 6 in (152 mm) long.
[c]Hex head column values are valid for ISO 4014 and ISO 4017 hex head, ISO 4162 hex socket head, and ISO 4032 hex nuts.
[d]Hex flange column values are valid for ASME B18.2.3.9M, ISO 4161, or EN 1665 hex flange products.

DX,TORQ1-19-30MAY18

Machine Design Life

This machine is designed and manufactured to provide a long life of productive operation, however actual attainable life depends on a number of factors including the severity of working conditions and completion of recommended maintenance. (See the Service section of this manual.)

Periodically inspect and review the machine in conjunction with your John Deere dealer. The review may result in recommendations for service, component repair, remanufacture or replacement, or, if at the end of life, that the machine be removed from operation. (See separate decommissioning section of this manual for information on disposal and recycling of machine components.)

No machine should be operated if safety-related components are missing or in need of service. All missing or damaged safety-related components, including safety signs, should be repaired or replaced before operating.

OUO6064,00016D0-19-19OCT15

Eurasian Economic Union

TS1738—UN—26APR16

EAC Marking

This information applies only to products which bear the EAC conformity mark of the Eurasian Economic Union member states.

Manufacturer:
Deere & Company, Moline, Illinois U.S.A.

Name of the authorized representative in the Eurasian Economic Union:
Limited Liability Company
“John Deere Rus”

Address of the authorized representative:
142050, Russia, Moscow region, Domodedovo district, Domodedovo, Beliye Stolbi micro district, vladenye “Warehouse 104”, Building 2

For technical support, contact your dealer.

Date of manufacture is denoted by the product marking on or near the serial number plate.

DX,EAC-19-27APR16

Customs Union—EAC Compliance Label Location

NOTE: This information applies only to products which bear the EAC conformity mark of the Customs Union member states.

E80349—UN—04NOV15

A—Compliance Label

Compliance label (A) is located to the left of the machine serial number plate.

OUO6064,00016CF-19-04NOV15

Serial Numbers

Serial Number Plate

Serial number identifying the baler is stamped on factory serial number plate.

These numbers and letters are required when ordering baler or attachment replacement parts.

To ensure that you have these numbers at hand, enter the appropriate serial number in the table provided under the illustration.

PP98408,00006C7-19-02MAR12

Serial Number Plate Description

E83116—UN—06DEC17

Serial Number Plate Example

Position	Use	Example
1—3	Factory Code	1E0
4—8	Model	0560M
9	Security Code	P
10	Year of Manufacture	C
11	Model Year	C
13—17	Sequential Manufacturing Number	440000

DP99999,0000D4B-19-06DEC17

Record Baler Serial Number

E60918—UN—02MAR12

A—Serial Number Plate

The serial number plate (A) is located on the left-hand side of the front frame.

Record the serial number in the table below.

_____

DP99999,0000D4C-19-10MAY17

Keep Proof of Ownership

TS1680—UN—09DEC03

1. Maintain in a secure location an up-to-date inventory of all product and component serial numbers.
2. Regularly verify that identification plates have not been removed. Report any evidence of tampering to law enforcement agencies and order duplicate plates.
3. Other steps you can take:
   - Mark your machine with your own numbering system
   - Take color photographs from several angles of each machine

DX,SECURE1-19-18NOV03

Keep Machines Secure

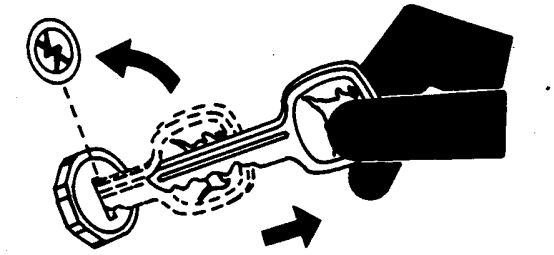

TS230—UN—24MAY89

1. Install vandal-proof devices.
2. When machine is in storage:
   - Lower equipment to the ground
   - Set wheels to widest position to make loading more difficult
   - Remove any keys and batteries
3. When parking indoors, put large equipment in front of exits and lock your storage buildings.
4. When parking outdoors, store in a well-lighted and fenced area.
5. Make note of suspicious activity and report any thefts immediately to law enforcement agencies.
6. Notify your John Deere dealer of any losses.

DX,SECURE2-19-18NOV03

Index

A

B

C

D

E

F

G

N

O

S

T

U

V

W

John Deere Service Literature Available

Technical Information

Technical information can be purchased from John Deere. Publications are available in print or CD-ROM format.

Orders can be made using one of the following:

- John Deere Technical Information Store: **www.JohnDeere.com/TechInfoStore**
- Call 1-800-522-7448
- Contact your John Deere dealer

Available information includes:

TS189—UN—17JAN89

PARTS CATALOGS list service parts available for your machine with exploded view illustrations to help you identify the correct parts. It is also useful in assembling and disassembling.

TS191—UN—02DEC88

OPERATOR'S MANUALS providing safety, operating, maintenance, and service information.

TS224—UN—17JAN89

TECHNICAL MANUALS outlining service information for your machine. Included are specifications, illustrated assembly and disassembly procedures, hydraulic oil flow diagrams, and wiring diagrams. Some products have separate manuals for repair and diagnostic information. Some components, such as engines, are available in a separate component technical manual.

TS1663—UN—10OCT97

EDUCATIONAL CURRICULUM including five comprehensive series of books detailing basic information regardless of manufacturer:

- Agricultural Primer series covers technology in farming and ranching.
- Farm Business Management series examines "real-world" problems and offers practical solutions in the areas of marketing, financing, equipment selection, and compliance.
- Fundamentals of Services manuals show you how to repair and maintain off-road equipment.
- Fundamentals of Machine Operation manuals explain machine capacities and adjustments, how to improve machine performance, and how to eliminate unnecessary field operations.
- Fundamentals of Compact Equipment manuals provide instruction in servicing and maintaining equipment up to 40 PTO horsepower.

DX,SERVLIT-19-07DEC16

John Deere Service Keeps You On The Job

John Deere Is At Your Service

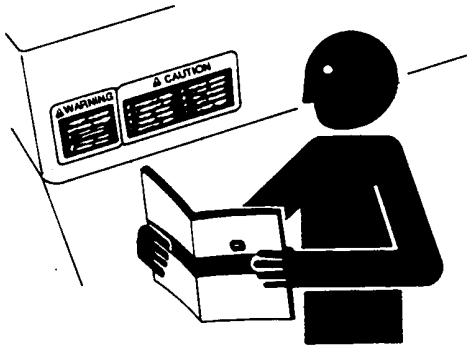

TS201—UN—15APR13

CUSTOMER SATISFACTION is important to John Deere.

Our dealers strive to provide you with prompt, efficient parts and service:

–Maintenance and service parts to support your equipment.

–Trained service technicians and the necessary diagnostic and repair tools to service your equipment.

CUSTOMER SATISFACTION PROBLEM RESOLUTION PROCESS

Your John Deere dealer is dedicated to supporting your equipment and resolving any problem you may experience.

1. When contacting your dealer, be prepared with the following information:

–Machine model and product identification number

–Date of purchase

–Nature of problem

2. Discuss problem with dealer service manager.

3. If unable to resolve, explain problem to dealership manager and request assistance.

4. If you have a persistent problem your dealership is unable to resolve, ask your dealer to contact John Deere for assistance. Or contact the Ag Customer Assistance Center at 1-866-99DEERE (866-993-3373) or e-mail us at www.deere.com/en_US/ag/contactus/.

DX,IBC,2-19-02APR02